Motorized Treadmill

Operating Instructions Manual

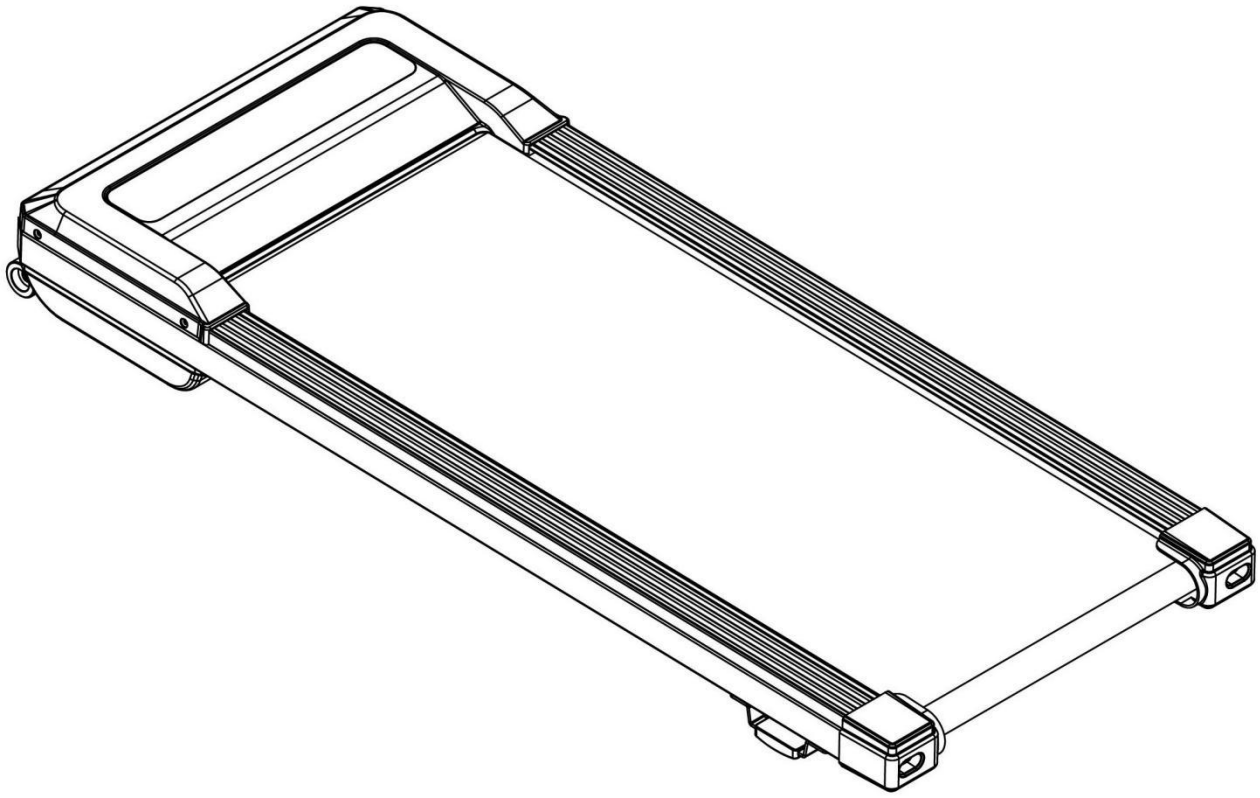

MADE IN CHINA

Special tips:

1.Before installation and operation, please read this operation manual carefully.

2.Please save this manual for future reference.

IMPORTANT SAFETY INSTRUCTIONS

WARNING - Read all instructions before using this treadmill. It is important your treadmill receives regular maintenance to prolong its useful life. Failing to regularly maintain your treadmill may void your warranty.

Danger–To reduce the risk of electric shock disconnect your treadmill from the electrical outlet prior to cleaning and/or service work.
DO NOT USE AN EXTENSION CORD: DO NOT ATTEMPT TO DISABLE THE GROUNDED PLUG BY USING IMPORPER ADAPTERS OR IN ANY WAY MODIFY THE CORD SET.

1) Install the treadmill on a flat level surface with access to correct voltage and frequency, grounded outlet.
2) Do not operate treadmill on deeply padded, plush or shag carpet. Damage to both carpet and treadmill may result.
3) Do not block the rear of the treadmill. Provide a minimum of 1 meter clearance between the rear of the treadmill and any fixed object.
4) Place your unit on a solid, level surface when in use.
5) Never allow children on or near the treadmill.
6) Keep hands away from all moving parts.
7) Never operate the treadmill if it has a damaged cord or plug.
8) Keep the cord away from heated surfaces.
9) Do not operate where aerosol spray products are being used or where oxygen is being administered. Sparks from the motor may ignite a highly flammable environment.
10) Never drop or insert any object into any openings.
11) The treadmill is intended for in-home use only and not suitable for long time running.
12) To disconnect, turn all controls to the off position, remove the safety key, and then remove the plug from the outlet.
13) Use handrails provided; they are for your safety.
14) Wear proper shoes. High heels, dress shoes, sandals or bare feet are not suitable for use on your treadmill. Quality athletic shoes are recommended to avoid leg fatigue.
15) Allowed temperature: 5 to 40 degrees.

IMPORTANT ELECTRICAL INFORMATION

WARNING!

1) NEVER use a ground fault circuit interrupt (GFCI) wall outlet with this treadmill. Route the power cord away from any moving part of the treadmill including the elevation mechanism and transport wheels.
2) NEVER operate treadmill on Generator or UPS power supply.
3) NEVER remove any cover without first disconnecting AC power.
4) NEVER expose this treadmill to rain or moisture. This treadmill is not designed for use outdoors, near a pool, or in any other high humidity environment.

IMPORTANT OPERATION INSTRUCTIONS

1) Insert the power plug into the socket directly.
2) The constant running time is less than 2 hours. Be sure to read the entire manual before operating your machine.
3) Understand that changes in speed and incline do not occur immediately. Set your desired speed on the computer console and release the adjustment key. The computer will obey the command gradually.
4) Use caution while participating in other activities while walking on your treadmill; such as watching television, reading, etc. These distractions may cause you to lose balance or stray from walking in the Centre of the belt; which may result in serious injury.
5) In order to prevent losing balance and suffering unexpected injury, **NEVER** mount or dismount the treadmill while the belt is moving. This unit starts with a very low speed. Simply standing on the belt during slow acceleration is proper after you have learned to operate this machine.
6) Always hold on to handrail while making control changes.
7) A safety key is provided with this machine. Remove the safety key will stop the walking belt immediately; the treadmill will shut off automatically. Insert the safety key will reset the display.
8) Do not use excessive pressure on console control keys. They are precision set to function properly with little finger pressure.
9) This appliance is not intended for use by persons (including children) with reduced physical, sensory or mental capabilities, or lack of experience and knowledge, unless they have been given supervision or instruction concerning use of the appliance by a person responsible for their safety, Children should be supervised to ensure that they do not play with the appliance.
10) Please consult your doctor at first before running, if you have one of the following diseases:
    a. Cardiopathy, hypertension, sugar diabetes, respiratory disease, smoking, and other chronic diseases, complication disease.
    b. If you are over 35 years old and heavier than common weight.
    c. Women in pregnant or in breasting period.
11) Please stop exercising immediately and consult your doctor when you feel giddy, surfeit, thorax ache or other symptoms.
12) Please drink adequate water after taking exercises on our treadmill for more than 20 minutes.

Warning: Now here we suggest that you should consult with your physician or health professional before starting your workout, especially for the age up to 35 old or once-health problem people. We take no responsible for any troubles or hurts if you don't following our specification. Treadmill will be carefully assembled and covered the motor shield, then connect to the power.

ASSEMBLY INSTRUCTIONS

When you open the carton, you will find the below spare parts:

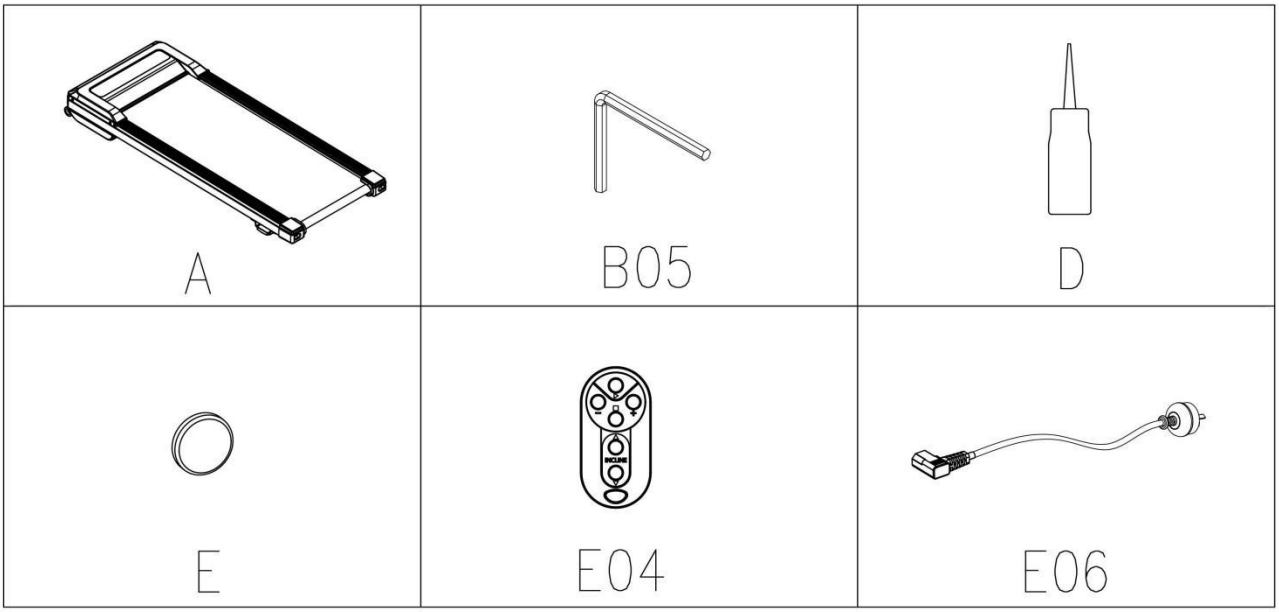

NO.	DES.	Specification	Nos.		NO.	DES.	Specification	Nos.
A	Walking treadmill		1		B05	5# with cross hex wrench		1
E04	Remote control		1		D	Oil		1
E06	Power cord		1		E	Battery		1

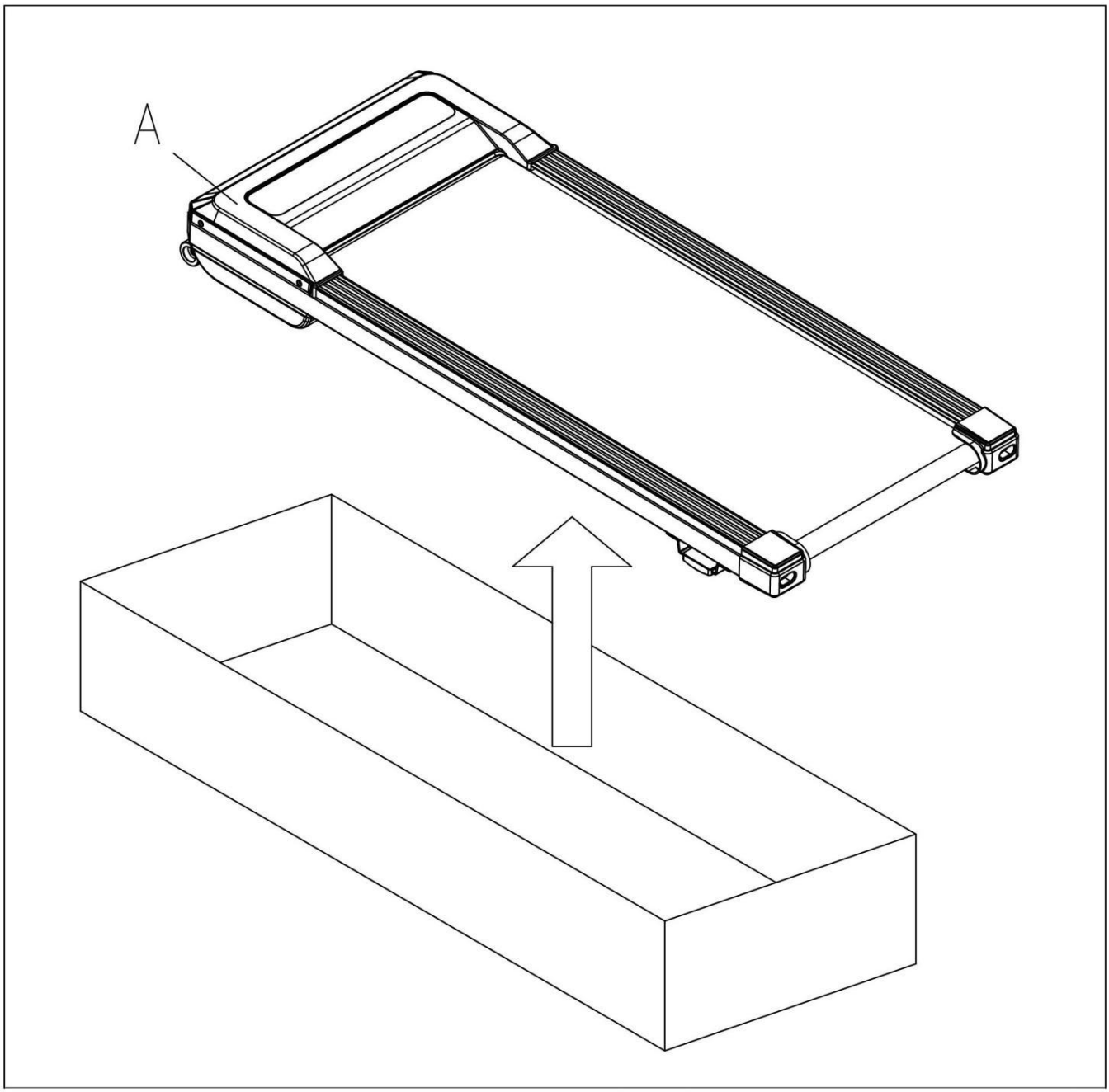
A

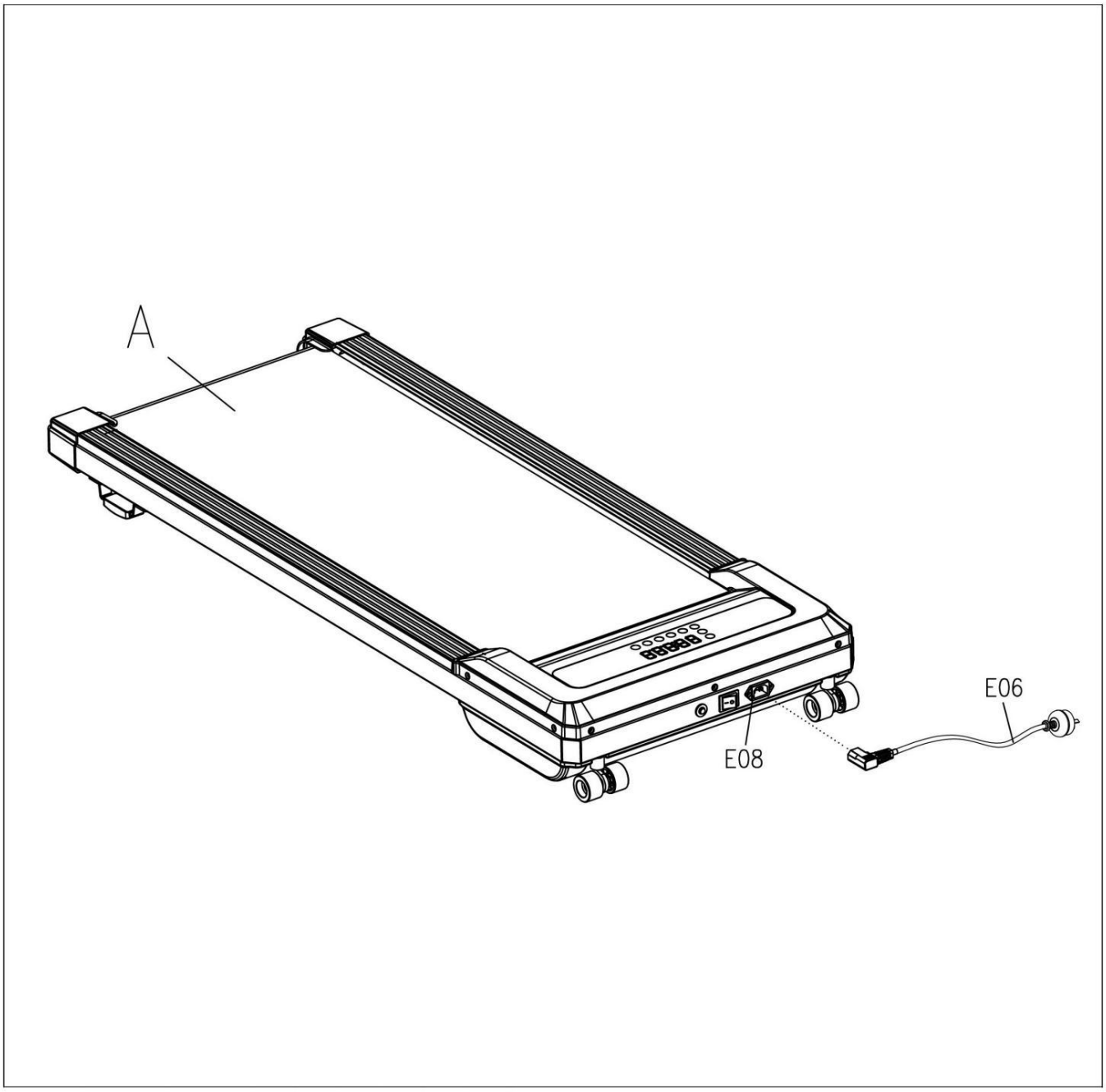
A
E06
E08

Battery Installation And Replacement

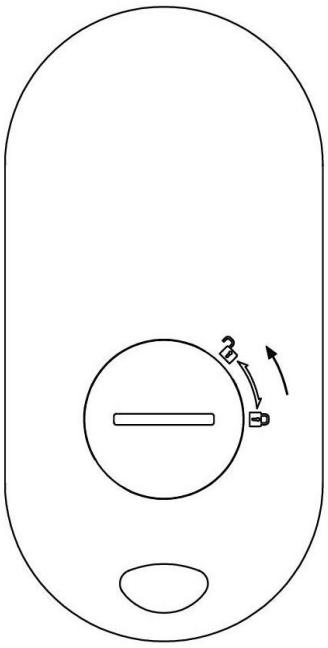

1 、 Screw the battery cover to the unlock position to open it.

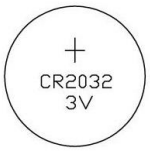

2、Insert the battery with the same specification of original one.

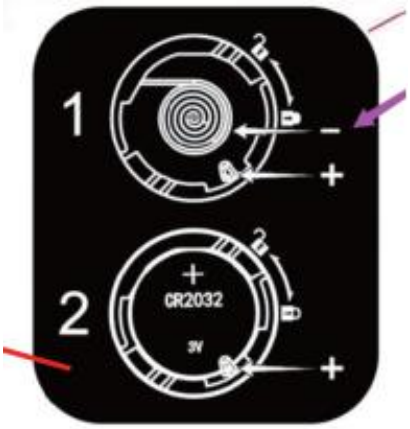

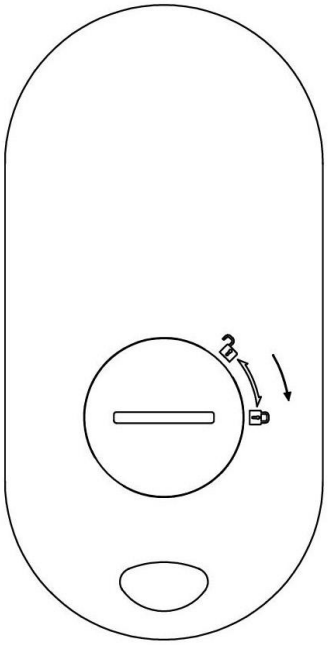

3、 Replace the cover and screw it to the lock position.

HANDLING INSTRUCTIONS

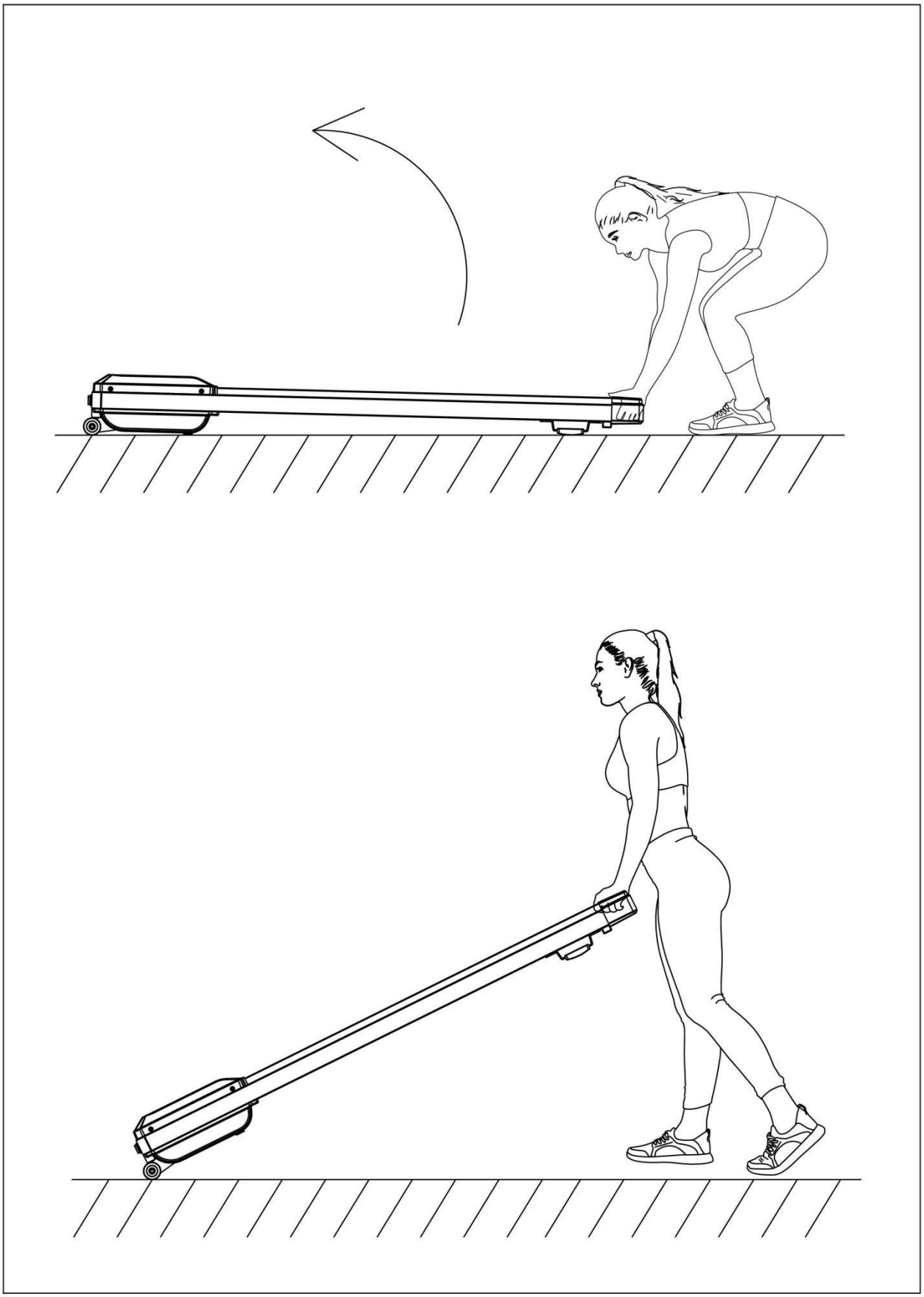

IMPORTANT ELECTRICAL INFORMATION

WARNING: This treadmill requires a right power source in order to properly operate.

For your safety, as well as the safety of others, please verify that the power source is correct before plugging the equipment. Any incorrect power source could cause significant damage to the equipment and or user.

GROUNDING METHODS:

This product must be grounded. Grounding provides the least resistance for electrical current and will reduce the risk of electric shock. The plug must be plugged into an appropriate outlet that is properly installed and grounded in accordance with all local codes and ordinances. Ensure that the product is connected to an outlet which contains the same configuration as the plug. Do not use an adaptor for this product.

This product is for use on a nominal circuit and has a grounding plug that looks like the plug illustrated in sketch A. Make sure that the product is connected to an outlet having the same configuration as the plug. No adapter should be used with this product.

DANGER:

Improper connection of the equipment-grounding conductor can result in risk of electric shock. Check with a certified electrician if you are in doubt as to whether the product is properly grounded. Do not modify the plug provided with the product. If it will not fit the outlet, have a proper outlet installed by an electrician.

WARNING!

1. NEVER use a ground fault circuit interrupt (GFCI) wall outlet with this treadmill. Route the power cord away from any moving part of the treadmill including the elevation mechanism and transport wheels.
2. NEVER operate the treadmill using a generator or UPS power supply.
3. NEVER remove any cover without first disconnecting power.
4. NEVER expose the treadmill to rain or moisture. This treadmill is not designed for use outdoors, near pools or in any other high humidity environment.

Grounding methods

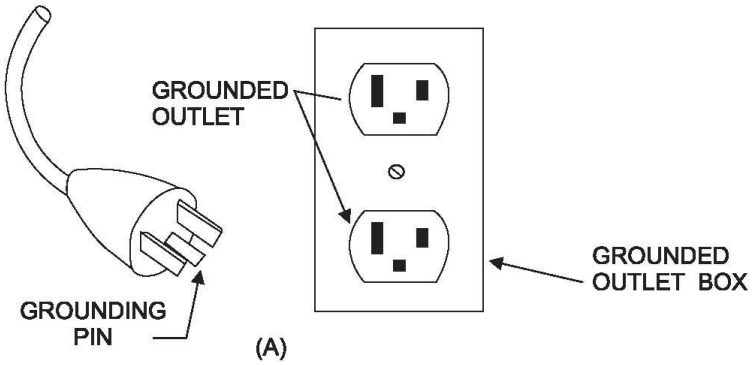

OPERATION GUIDE

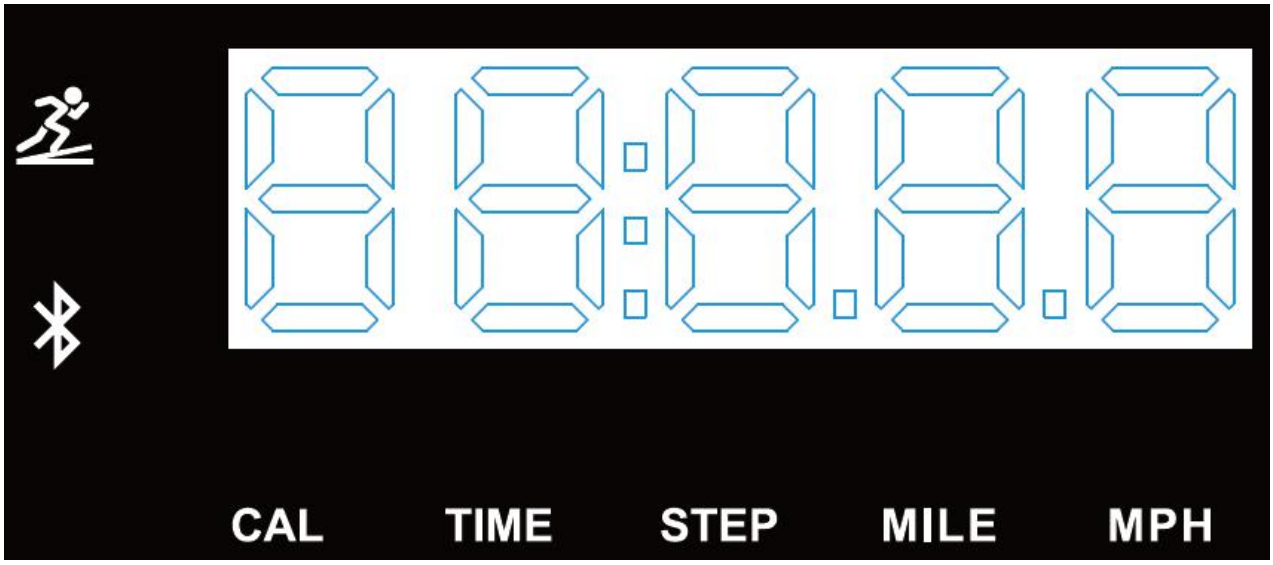

LED SRCEEN:

1.Display Speed：0.5 - 4.0MPH
2.Display Time：0:00 - 99:59 mins
3.Display Distance：0.0 - 99.99 Mile
4.Display Calories：0.0 - 9999.9 Calories
5.Display Steps：0 - 99999 Steps
6.Display Incline：0-8 Section

Tips: The workout datas (Incline; Calories; Time; Step; Distance; Speed) will be circularly displayed per 5s.

REMOTE CONTROLLER:

1. Start : When the power is on standby, press this key, the system enters the 3-second countdown, and the walker starts running at a speed of 0.5MPH.

2. Pause/ Stop : In the running state, press the stop key to pause the running, and the window displays "PAU"; In the paused state, press START to continue running, and press STOP again to stop and reset.

3. Speed+ : Pressing the acceleration key will increase the running speed of the walking machine; It has an adjustment amplitude of 0.1MPH/time and automatically increases when held for more than 0.5 seconds.

4. Speed- : Pressing the deceleration button will reduce the running speed of the walker by

0.1MPH/ time and automatically decrease when held for more than 0.5 seconds.

5. Incline+ : Pressing this key will increase the running slope of the walker, and its adjustment amplitude value is 1 section/ time, and it will automatically increase when it is held down for more than 0.5 seconds.

6. Incline- : Pressing this key will reduce the running slope of the walker, and its adjustment amplitude is 1 section/ time, and it will automatically continue to decrease when it is held for more than 0.5 seconds.

Remote Control Pairing:

If the remote control does not respond or you change the remote control, you need to re-pair; Pairing mode: Press and hold the start button of the remote control, then turn on the power switch, and the buzzer will ring five quickly to indicate that the remote control is successfully paired.

Display Range of Each Value:

Set Param	Initial	Set Initial Value	Set Up Range	Display Range
Time(Min:Second)	0	—	—	0：00—99:59
Speed(Mph)	0.0	0.5	0.5-4MPH	0.5-4MPH
Incline	0	0	0-8	0-8
Distance(Mile)	0	—	—	0.00--99.99
Step	0	—	—	0-99999
Calorie	0	—	—	0.0--9999.9

Power Save Mode:

This system has the power saving function, in the standby state if there is no key instruction input within 10 minutes, the system enters the power saving mode, automatically closes the display, press any key to reawaken the system.

Power Off:

The treadmill can be turned off at any time by turning off the power switch, which will not damage the treadmill.

Attention:

1, Check whether the power supply is loaded before movement;
2, If there is any problem with the treadmill, please contact the dealer. Non-professionals, do not attempt to disassemble or repair the equipment to avoid damage.

Error code Fault Analysis:

PROBLEM	POSSIBLE CAUSE	SUGGESTED ACTION
Treadmill will not start	Not plugged in	Plug cord into outlet
Running belt not centered	Running belt tension not correct on the left or right sides of the running board	Tighten the adjustment bolts on the left and right side of the rear roller
Computer not working	Wires from the computer and bottom control board not properly connected.	Check wire connections from the computer to the control board.
	Transformer is damaged	If the transformer is damaged, contact customer service.
E01 : Internal communication disconnected or error	Wires from the computer and bottom control board not properly connected.	Check wire connections from the computer to the control board. If the wire has been punctured or damaged, you will need to replace it. If the problem is not rectified, you may need to replace the control board.
E02: Motor Abnormality	The motor wire is not connected. The lower control motor has no voltage output or the voltage output is abnormal. Motor is damaged.	Check that the motor cable is connected correctly. Replace lower control, to be repaired. Change the motor.
E03：Velocity Detection Abnormality	The drive circuit of the lower controller is faulty.	Replace lower control, to be repaired.
E04：Over voltage protection	The treadmill load greatly exceeds the rated operating voltage of the motor. The treadmill motor is abnormal. Lower control board motor over voltage circuit failure.	It is recommended to use within the rated operating voltage range of the motor. Change the motor. Replace lower control, to be repaired.

PROBLEM	POSSIBLE CAUSE	SUGGESTED ACTION
E05：Over current protection	The treadmill load exceeds the rated operating current of the motor. The machine assembly structure problems, resulting in motor resistance or blocking phenomenon. The lower control current limiting system is faulty.	It is recommended to be within the rated operating current range of the motor. Check whether the treadmill structure is normal. Replace lower control, to be repaired.

Walking Machine Refueling Maintenance Reminder:

1. The treadmill detects the maintenance mileage after each power on. When the maintenance mileage reaches 188 miles, the electronic watch makes a sound of "beep" for 10 seconds, and the window displays "OIL". When you see this prompt, it means that the treadmill needs refueling and maintenance. For refueling methods, refer to the maintenance guide section of the treadmill manual. The lubricating oil must be added to the middle of the running board.

2. After filling the lubricating oil, long press the stop button for 3 seconds in the standby state. When you hear a "drip" sound, the system will clear the refueling reminder.

MAINTENANCE & CARE

General cleaning will help prolong the life and performance of your treadmill. Keep the unit clean and maintained by dusting the components on a regular basis. Clean both sides of the running belt to prevent dust from accumulating underneath the belt. Keep your running shoes clean so that dirt from your shoes does not wear out the running board and belt. Clean the surface of the running belt with a clean damp cloth.

- To better maintain the treadmill and prolong its life it is suggested that the machine be powered off for 10 minutes every 2 hours and fully powered off whenever not in use.
- A loose Running Belt will result in the runner sliding off when running, while too tight of a Running Belt will result in decrease to the motors performance and also create more friction between the roller and running belts. The most suitable tightness for the belts is pulled out 50-75mm from the Running Board.

CENTERING THE RUNNING BELT:

When the treadmill is moving, check if the Running Belt drifts.

1. If the **Running Belt** moves to the **right**, turn the adjusting bolt on the right side ¼ turn *clockwise*, then turn the left adjustment bolt ¼ turn *counter-clockwise*. If the belt does not move, repeat this step until it centers. Refer to figure A.

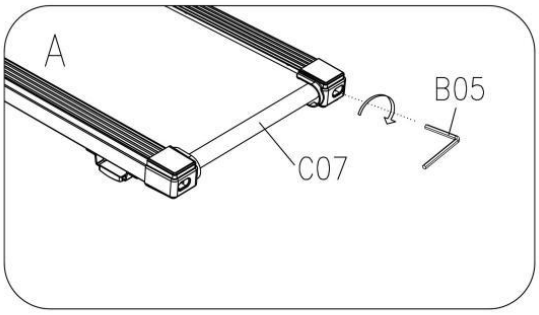

2. If the **Running Belt** moves to the **left**, turn the adjusting bolts on the left side ¼ of a turn *clockwise*, then turn the right adjustment bolt ¼ turn *counter-clockwise*. If the belt does not move, repeat this step until it centers. Refer to figure B.

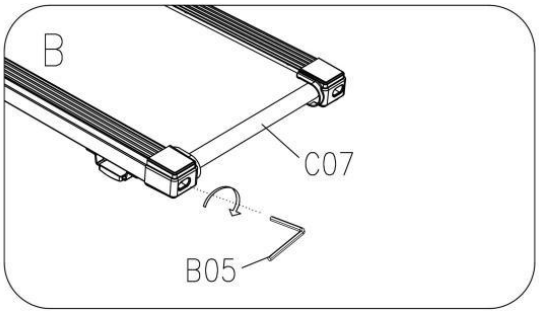

3. Over time the **Running Belt** will **loosen**. To tighten the belt turn the Left & Right side adjustment bolts one full turn clockwise, check the tension of the belt. Continue this process until belt is at the correct tension. Make sure to adjust both sides equally to ensure correct belt alignment. Refer to figure C.

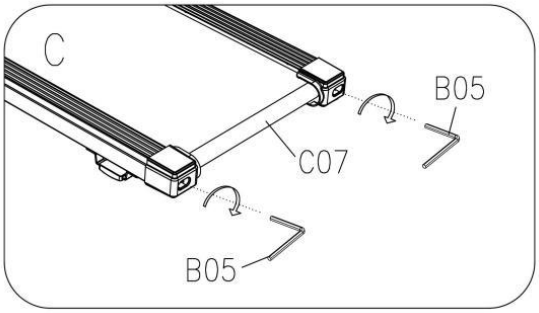

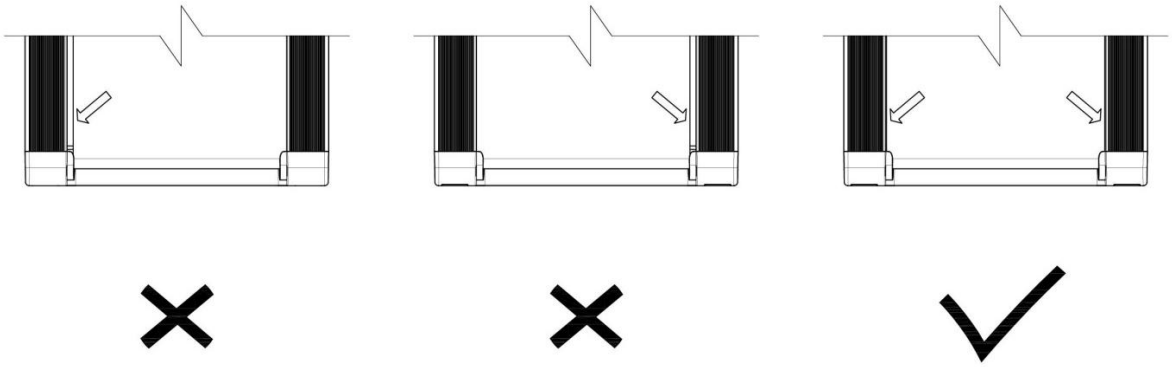

LUBRICATING THE TREADMILL

IMPORTANT NOTE:
You will need to lubricate your treadmill before the first use.

RUNNING BELTS & TREADMILL LUBRICANT:
Lubricating the running board and running belt is essential as the friction between the two affects the life span and function of the treadmill, therefore it is suggested that the running board and belt be inspected regularly.
WARNING: Always unplug the treadmill from the electrical outlet before cleaning, lubricating or repairing the unit.

HOW TO LUBRICATE:
1. Raise the belt up on one side and apply lubricant to the running deck. Use a rag to thoroughly wipe the lubricant over the running deck. Repeat this process for the other side.
2. The moving parts should turn freely and quietly. Abnormality of moving parts will affect the safety of the equipment. Inspect and tighten bolts regularly.
3. To better maintain the treadmill and prolong its lifespan, it is suggested that maintenance be done on a regular basis.

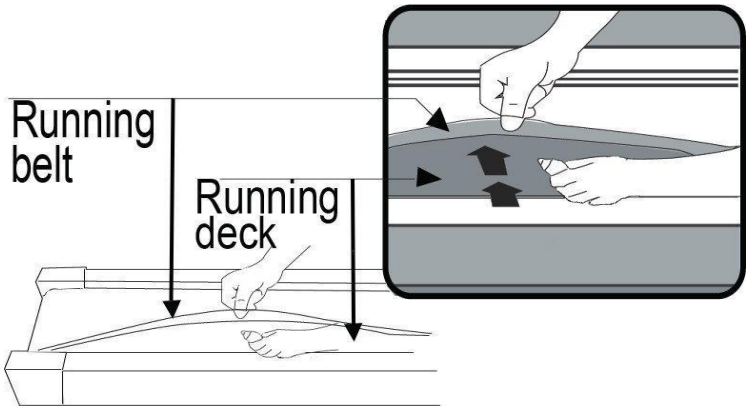

The following time table is recommended:

Light user (less than 3 hours/ week)	*every six months*
Medium user (3-5 hours/ week)	*every three months*
Heavy user (more than 5 hours/ week)	*every two months*

EXPLODED DRAWINGN 1

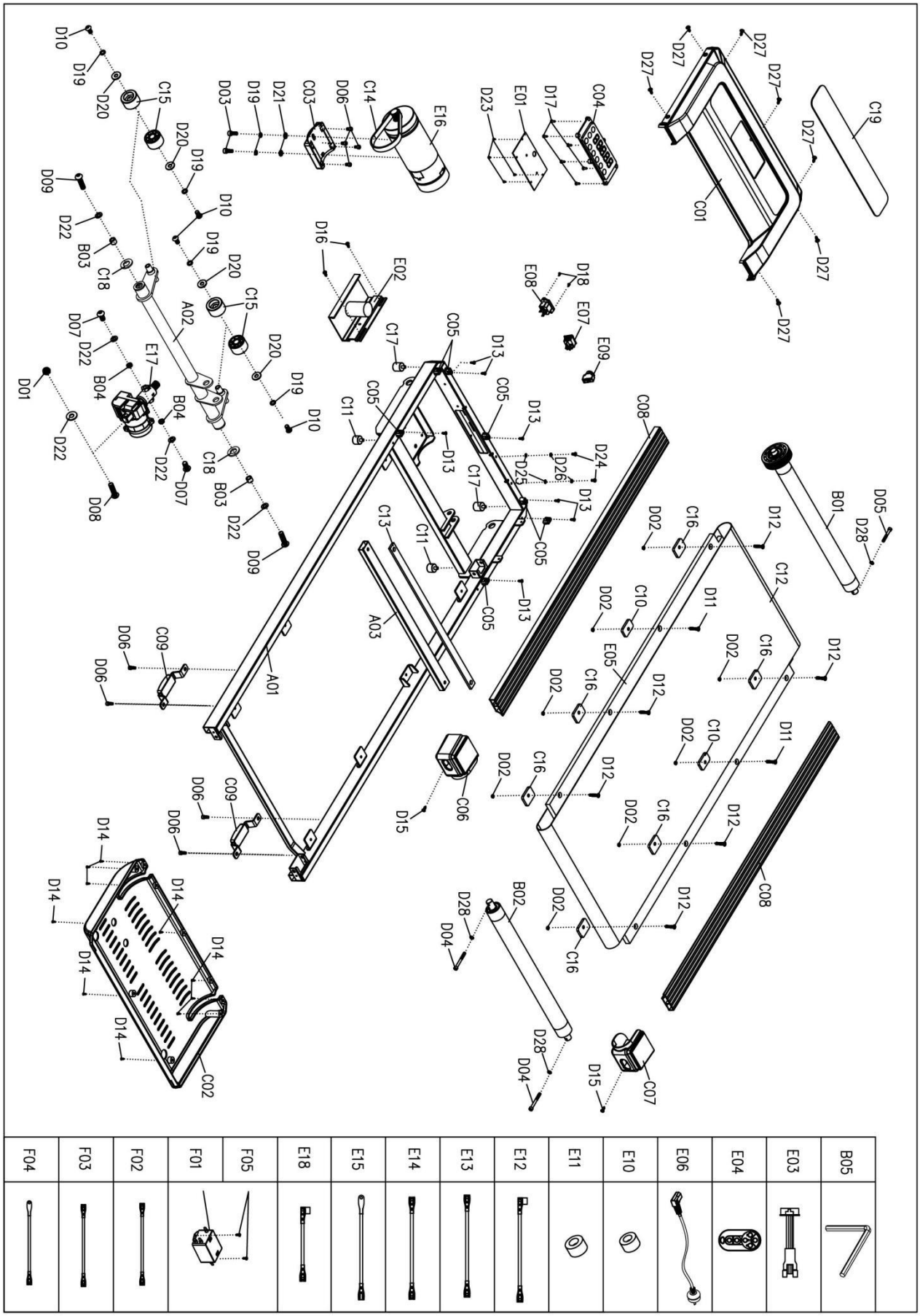

B05	E03	E04	E06	E10	E11	E12	E13	E14	E15	E18	F05	F01	F02	F03	F04

PARTS LIST

No.	Part description	Remark	Qty	No.	Part description	Remark	Qty
A01	Main frame		1	D11	Screw	M6*45	2
A02	Incline frame		1	D12	Screw	M6*27	6
A03	Running board reinforcement bar		1	D13	Screw	ST4.2*20	7
B01	Front roller		1	D14	Screw	ST4.2*16	10
B02	Rear roller		1	D15	Screw	ST4.2*16	2
B03	Rotating sleeve		2	D16	Screw	ST4.2*12	2
B04	Lifting rotary casing		2	D17	Screw	ST2.9*8	6
B05	5# with cross hex wrench		1	D18	Screw	ST2.9*8	2
C01	Motor front cover		1	D19	Washer	8	6
C02	Motor bottom Cover		1	D20	Clip washer	φ8*φ22*2.0	4
C03	Motor base		1	D21	Flat washer	8	2
C04	Grating plate		1	D22	Flat washer	10	5
C05	Motor cover fixed seat		7	D23	Screw	ST2.9*6	4
C06	Left rear cover		1	D24	Screw	M5*12	2
C07	Right rear cover		1	D25	Washer	5	2
C08	Side rail		2	D26	Washer	5	2
C09	Back foot pad		2	D27	Screw	ST4.2*12	7
C10	Rubber buffer		2	D28	Washer	6	3
C11	Cushion		2	E01	Console		1
C12	Running belt		1	E02	Control Board		1
C13	EVA pad		1	E03	Console communication wire		1
C14	Motor belt		1	E04	Remote control		1
C15	Travelling wheel		4	E05	Running board		1
C16	Rubber buffer		6	E06	Power cord		1
C17	Cushion		2	E07	Square boat switch		1
C18	Plastic gasket		2	E08	Power socket		1
C19	Acrylic overlay		1	E09	Overload protector		1
D01	Lock nut	M10	1	E10	Magnetic ring		1
D02	Lock nut	M6	8	E11	Magnetic core		1
D03	Screw	M8*20	2	E12	AC single wire		1
D04	Screw	M6*55	2	E13	AC single wire		1
D05	Screw	M6*45	1	E14	AC single wire		2
D06	Screw	M6*10	8	E15	Erath wire		1
D07	Screw	M10*15	2	E16	DC moter		1
D08	Screw	M10*40	1	E17	Incline motor		1
D09	Screw	M10*40	2	E18	AC single wire		1
D10	Screw	M8*15	4	E19	AC single wire		2

FCC Warning Statement

Changes or modifications not expressly approved by the party responsible for compliance could void the user's authority to operate the equipment. This equipment has been tested and found to comply with the limits for a Class B digital device, pursuant to Part 15 of the FCC Rules. These limits are designed to provide reasonable protection against harmful interference in a residential installation. This equipment generates uses and can radiate radio frequency energy and, if not installed and used in accordance with the instructions, may cause harmful interference to radio communications. However, there is no guarantee that interference will not occur in a particular installation. If this equipment does cause harmful interference to radio or television reception, which can be determined by turning the equipment off and on, the user is encouraged to try to correct the interference by one or more of the following measures:

-- Reorient or relocate the receiving antenna.
-- Increase the separation between the equipment and receiver.
-- Connect the equipment into an outlet on a circuit different from that to which the receiver is connected.
-- Consult the dealer or an experienced radio/TV technician for help.

This device complies with Part 15 of the FCC Rules. Operation is subject to the following two conditions:

(1)This device may not cause harmful interference.

(2)This device must accept any interference received, including interference that may cause undesired operation.

FCC Radiation Exposure Statement
The device has been evaluated to meet general RF exposure requirement.
The device can be used in portable exposure condition without restriction.

Warning

Warning!

1.Remove and immediately recycle or dispose of used batteries according to local regulations and keep away from children. Do NOT dispose of batteries in household trash or incinerate.

2.Even used batteries may cause severe injury or death.

3.Call a local poison control center for treatment information.

4.The compatible battery type CR2032 3V.

5.Non-rechargeable batteries are not to be recharged.

6.Do not force discharge, recharge, disassemble, heat above 50°C/122°F or incinerate. Doing so may result in injury due to venting, leakage or explosion resulting in chemical burns.

7.Ensure the batteries are installed correctly according to polarity (+ and -).

8.Do not mix old and new batteries, different brands or types of batteries, such as alkaline, carbon-zinc, or rechargeable batteries.

9.Remove and immediately recycle or dispose of batteries from equipment not used for an extended period of time according to local regulations.

10.Always completely secure the battery compartment. If the battery compartment does not close securely, stop using the product, remove the batteries, and keep them away from children.

⚠WARNING

- **INGESTION HAZARD**:This product contains a button cell or coin battery.
- **DEATH** or serious injury can occur if ingested.
- A swallowed button cell or coin battery can cause **Internal Chemical Burns** in as little as **2 hours**
- **KEEP** new and used batteries **OUT OF REACH of CHILDREN**
- **Seek immediate medical attention** if a battery is suspected to be swallowed or inserted inside any part of the body.

MADE IN CHINA