Quick Start Guide
快速操作指南

CT-8A

Copyright © 2023 Hobby Model Technology co.,ltd

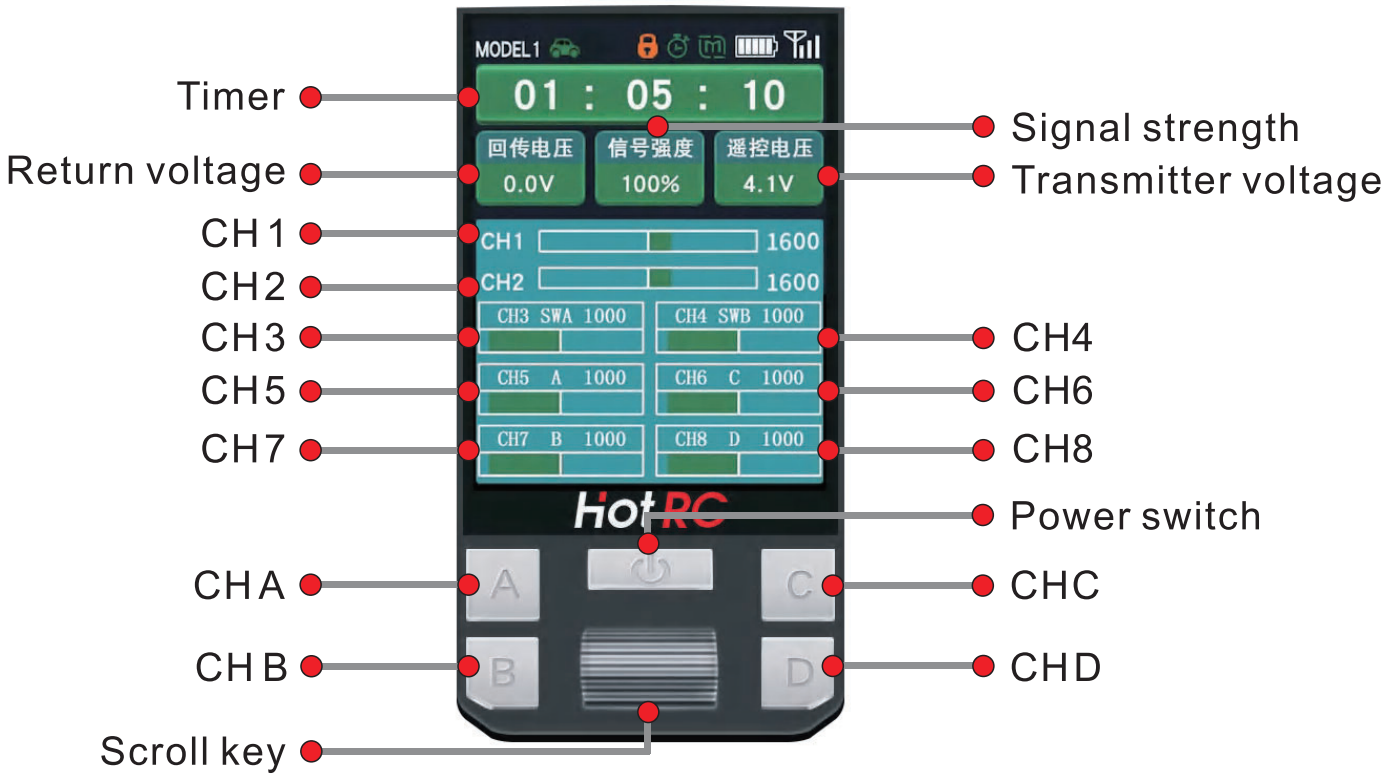

【Power switch】: long press to turn on and off, short press to return.
【Scroll key】: Scroll up and down to select, short press to confirm; press and hold to pause during timing, and press and hold again to clear timing.

Code matching steps

The remote control has two code matching methods, you can choose any one.

Coding method one:
A. Power on the receiver first;
B. Press the receiver [BING] button again;
C. Finally, turn on the transmitter power.
Coding method two:
A. Both the receiver and transmitter are powered on;
B. Press the receiver [BING] button again;
C. Enter the remote control code matching page to perform code matching.

Loss of control protection

The default runaway protection value of the remote control is 1500 center value for each channel. The runaway value of each channel can be set according to the needs. The runaway protection setting needs to be connected to the receiver to enter the interface.

Coach mode

The remote control is equipped with a Type-c interface data cable, and two remote controls of the same model can be directly connected to activate the coaching function. The remote control can be set to student mode or coach mode through the setting interface. The remote control in coach mode directly controls the remote control in student mode. The trainer machine can only control the signal values of channel one and channel two of the student machine.

CH1/CH2 Mixing

Directional mixing control is mainly the mixing control mode for CH1 channel and CH2 channel. There are 4 mixing control modes in the remote control, and the mixing control mode can be set according to needs.

Programming mixing

Programming mixing control is mainly for the mixing control mode of AB channel and CD channel, which can be applied to the raising and lowering of the winch of model cars.

Rocker calibration

Enter the calibration setting interface, confirm to start calibration, push the CH1 direction channel and CH2 throttle channel to the maximum and minimum, observe the green display box on the display, then return the joystick to the center point and click calibration to complete.

Battery usage

1. Instructions for use

A. The remote control can use three types of batteries: 4 No. 5 batteries/2S lithium batteries/18650 batteries, Please pay attention to the positive and negative poles when installing the battery. The remote control has a battery reverse protection function.

B. When the remote control battery is low, the power indicator light flashes and alarms. Please replace the battery immediately.

C. 2S/2.54 terminal interface is reserved in the remote control battery compartment for direct use of 2S lithium batteries, Do not use lithium batteries with a voltage higher than 2S.

Cruise speed

Enter the ESC setting interface to set functions, and an icon will be displayed on the cruise control interface.

Instructions:

①: Hold the throttle trigger at the fixed speed value for 3 seconds and enter the cruise control function;

②: Push the accelerator trigger forward to exit cruise control;

③: The fixed speed value can be increased during cruise control. Pull the throttle trigger backward to increase the fixed speed value.

Smart vehicle control

The standard receiver of the remote control does not have a gyroscope function, and a gyroscope version can be selected according to needs;The gyroscope receiver is installed and placed horizontally in the device according to the direction of the arrow; there will be a 3-second calibration time each time it is turned on.

Gain adjustment: It is the adjustment of gyroscope response sensitivity. The size can be adjusted as needed. The larger the value, the higher the sensitivity.
Direction adjustment: It is to adjust the forward and reverse directions of the gyroscope;

Timer

The maximum timer on the remote control is 60 minutes, and the timer can be set to start through the throttle stick or direction stick;
During the timing process, you can press and hold the scroll wheel button to pause, and then press and hold to clear the timer.

Channel settings

Each channel of the remote control can be set forward and reverse, the maximum and minimum stroke of each channel can be set, the neutral point of each channel can be fine-tuned, and the modes of CH3-CH8 channels can be customized.

Note

For safety reasons, it is best to turn off the receiver power before shutting down the remote control;
Non professional personnel, please do not disassemble the remote control without permission. Unauthorized disassembly is not guaranteed;
This product is not a toy and is suitable for use by individuals over the age of 15,

System settings

The battery type of the transmitter can be selected, and the default automatic shutdown time of the remote control is 15 minutes.

Turning on the setting lock can lock all setting functions;

The higher the standby brightness, the more power the remote control consumes;

Parameter

Model	CT-8A
Model type	Car/Boat/Tank/
Channels	8
RF range	2.4GHZ ISM
RF power	≈160MA-300MA
Modulation	GFSK
Spread spectrum	FHSS
Reaction speed	PWM≤20MS
RF distance	Ground≈: 300m*
Receive sensitivity	-96dbm
Channel resolution	4096
Transmitter voltage	DC 3.7V-9V
Receiver voltage	DC 3.5V-9V
Gross weight	230g

Remote control distance is for reference only

标配接收机 Receiver parameters

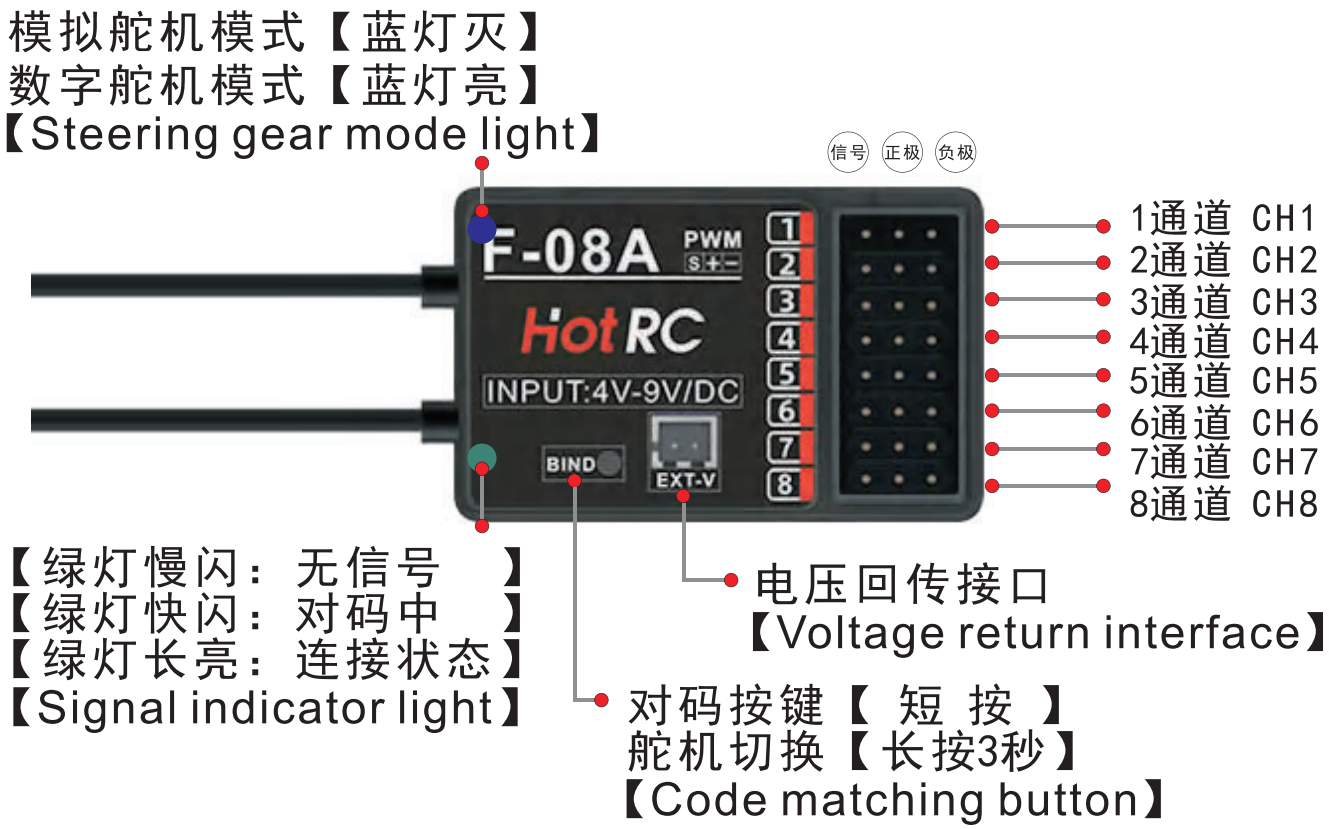

舵机模式说明 Servo mode

1：长按【BING】按键3秒钟，接收机蓝灯会亮起。
【蓝灯亮：数字舵机模式、PWM输出频率：333HZ】
【蓝灯灭：模拟舵机模式、PWM输出频率：50HZ 】
【数字舵机脉冲宽度：500μs-2500μs 】
【模拟舵机脉冲宽度：1000μs-2500μs】

注意事项 note

1：接收机的天线需要特别防护、防止折断、安装的位置需要注意磁场的干扰！
2：接收机出厂未做防水处理、使用过程请注意防水！
3：接收机输入电压请勿超过12V、使用稳压电源输入！
4：信号塔会对接收机信号有一定影响。

1: The antenna of the receiver needs special protection to prevent breakage, and the installation position needs to pay attention to magnetic field interference!
2: The receiver has not undergone waterproof treatment before leaving the factory. Please pay attention to waterproofing during use!
3: The input voltage of the receiver should not exceed 12V. Use a regulated power supply for input!

Hot RC®

FCC ID:

http://www.hotrc.cn

Copyright ©2023 Hobby Model Technology co.,ltd

更多介绍视频可扫码进入或直接搜索：HOTRC

For details, please scan the code or search：HOTRC

bilibili

YouTube

FCC Warnning:

This equipment has been tested and found to comply with the limits for a Class B digital device, pursuant to part 15 of the FCC Rules. These limits are designed to provide reasonable protection againstharmful interference in a residential installation. This equipment generates, uses and can radiateradio frequency energy and, if not installed and used in accordance with the instructions, maycause harmful interference to radio communications. However, there is no guarantee thatinterference will not occur in a particular installation. If this equipment does cause harmfulinterference to radio or television reception, which can be determined by turning the equipmentoff and on, the user is encouraged to try to correct the interference by one or more of thefollowing measures:

- Reorient or relocate the receiving antenna.
- Increase the separation between the equipment and receiver.
- Connect the equipment into an outlet on a circuit different from that to which the receiver is connected.
- Consult the dealer or an experienced radio/TV technician for help.

Caution: Any changes or modifications to this device not explicitly approved by manufacturer could void your authority to operate this equipment.

This device complies with part 15 of the FCC Rules. Operation is subject to the following two conditions:

(1)This device may not cause harmful interference, and (2) this device must accept any interference received, including interference that may cause undesired operation.

This equipment complies with FCC radiation exposure limits set forth for an uncontrolled environment. This equipment should be installed and operated with minimum distance 0cm between the radiator and your body.