电子墨水显示屏使用手册

1. 产品外观

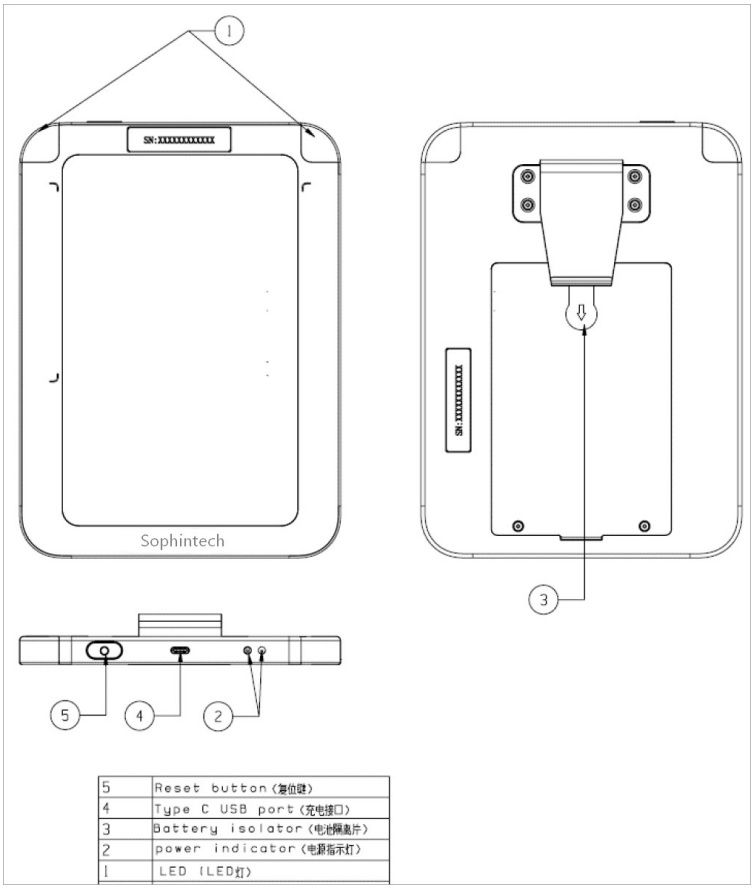

2. 产品信息和基本参数

项　　目	参数
产品名称	电子墨水显示屏
产品型号	ET007
产品尺寸	210mmX155mmX26mm
产品重量	420 克+/-5%
屏　　幕	7.5 inch, 640(H)*384(V) pixel, Black & White
电池容量	6000mAh
无　　线	WiFi 2.4GHz

3. 产品使用说明

- 收到产品后，拔出电池隔离片使电池开始对系统供电；
- 产品自动进行 WiFi 热点搜索，并自动按照系统提供的 SSID 信息连接到可用网络；

- 使用人员将产品放置到物料架上并与系统数据绑定；
- 后台系统定期推送物料信息，通过无线网络传递到产品上后，产品系统将刷新屏幕显示内容；
- 后台系统控制产品的 LED 灯，根据设定的程序发出不同的颜色。使用人员查找特定物料架时，可以通过 LED 灯发出特定的颜色来加快位置识别；
- 如遇连接不稳定，产品无法正常刷新屏幕时，请通过产品顶端右侧的复位键对产品进行重置，终端会重新自动连接网络。

4. 电池和充电说明

（1） 充电指引：

- 电池电量不足时(<20%)，电量指示灯会显示红色，需要及时对产品进行充电；
- 充电过程中，电源指示灯将显示蓝色，电量指示灯变成绿色，即为电池满充状态；

充电要求：该终端支持最高 5V/3A 快充，请使用合规充电器，避免产品因此受到损坏。

（2） 其它安全说明：

- 更换类型不正确的电池可能会破坏安全措施（例如，在某些锂电池类型的情况下）；
- 将电池放入火中或热烤箱中处理，或机械压碎或切割电池，可能导致爆炸；
- 将电池置于极高温度环境中,可能导致爆炸或易燃液体或气体泄漏；
- 电池承受极低的空气压力，可能导致爆炸或易燃液体或气体泄漏。

5. 软体更新和调试说明

本品提供两种软件更新方式：

(1) OTA 方式，由客户自行开发支持软件；

(2) 使用 Arduino 更新软件，步骤如下：

i. 取出电池仓螺丝并取出电池；

ii. 使用 Micro-USB 连接到电池仓侧边隐藏的接口，同时检查接口下方“拨动开关”是否位于 Boot 侧。

iii. 打开 Arduino 读取需要更新的软件；

iv. 软件信息配置；

v. 点击下载按钮开始软体下载；

vi. 需要进入 COM 调试模式时，需要将“拨动开关”拨动到另一侧即可。

6. 合规说明

- FCC合规声明

该设备符合FCC规则第15部分的规定。操作受以下两个条件约束：（1）此设备可能不会造成有害干扰，以及（2）此设备必须接受接收到的任何干扰，包括可能导致不期望操作的干扰。

未经合规负责方明确批准的变更或修改可能会使用户失去操作设备的权限。

根据FCC规则第15部分的规定，该设备经过测试，符合B类数字设备的限制。这些限制旨在提供合理的保护，防止住宅安装中的有害干扰。该设备产生、使用并可以辐射射频能量，如果不按照说明安装和使用，可能会对无线电通信造成有害干扰。但是，不能保证在特定

安装中不会发生干扰。

如果该设备确实对无线电或电视接收造成有害干扰，可以通过关闭和打开设备来确定，则鼓励用户尝试通过以下一种或多种措施来纠正干扰：
--重新定向或重新定位接收天线。
--增加设备和接收器之间的间距。
--将设备连接到与接收器连接的电路不同的电路上的插座。
--请咨询经销商或有经验的收音机/电视技术人员以获得帮助。

FCC SAR 声明
本设备符合 FCC 规定的不受控制环境下的辐射暴露限值。最终用户必须遵守具体的操作说明，以满足射频暴露合规性要求。本发射机不得与任何其他天线或发射机共置或一起运行。便携式设备的设计符合美国联邦通信委员会规定的无线电波暴露要求。这些要求将一克组织的平均 SAR 限制在 1.6 W/kg。在产品认证期间，根据该标准报告的最高 SAR 值为正确佩戴在身体上使用时的 SAR 值。

E-Traveler Device User Manual

1. Product Overview

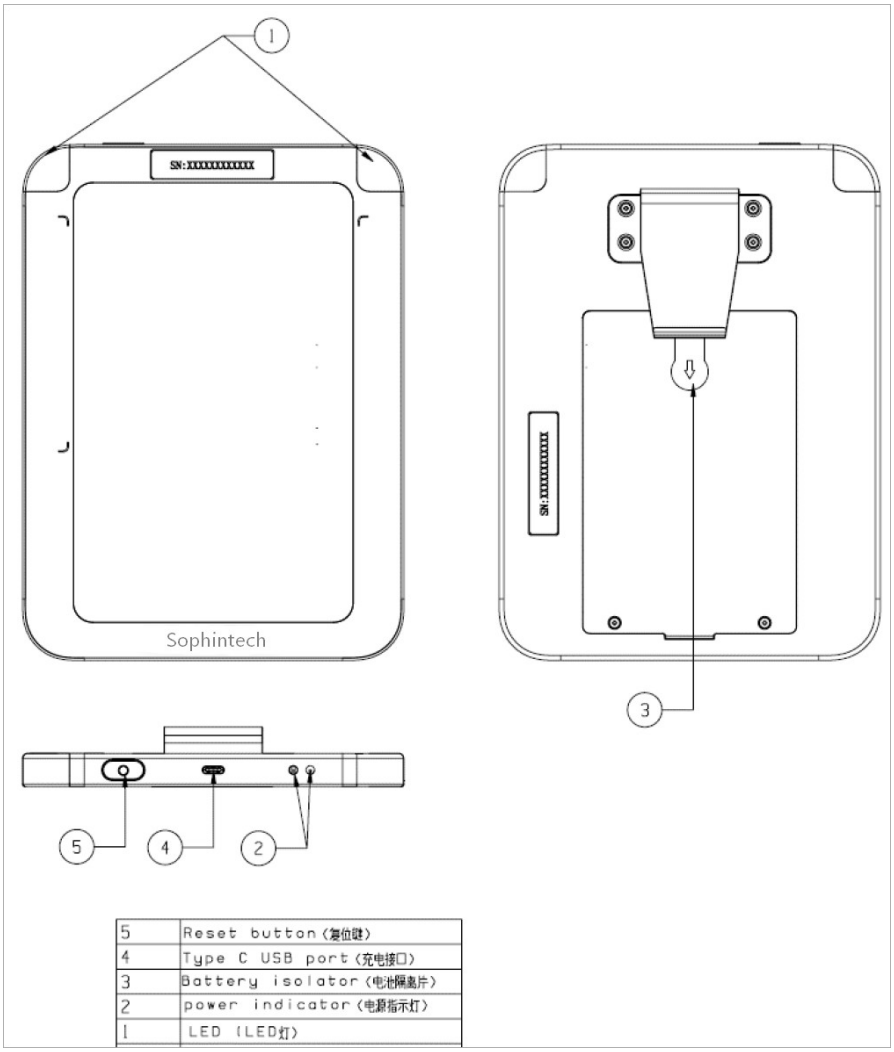

2. Information and Parameter

Item	Parameter
Product Name	E-Traveler Device
Model Number	ET007
Dimension	210mmX155mmX26mm
Weight	420g+/-5%
Screen	7.5 inch, 640(H)*384(V) pixel, Black & White
Battery	6000mAh
Wireless	WiFi 2.4GHz

3. User Instructions

- Upon receiving the device, pull out the battery isolator and battery starts power supply;
- E-traveler device automatically searches for WiFi hotspots and connects to available networks according to the SSID information provided by the system;
- Users attach the E-traveler to the material cart and connect the device to the system;
- Backend system regularly pushes material information and reaches E-traveler through the wireless network, and device system refreshes the screen display content;
- With the different LED light definition which is controlled by backend system, users can easily locate the material cart;
- Under the circumstances that the connection is unstable and E-traveler cannot refresh the screen normally, it can be reset via the Reset button, and the device will automatically re-connect to the network system.

4. Battery Charging Instructions

4.1 Battery Charging

- Device needs to be charged when the battery power capacity is low (<20%) and the power indicator turns to red;
- Device is under charging process and the power indicator turns to blue;
- Device is fully charged when the power indicator turns to green.

Requirements: The E-traveler supports up to 5V/3A fast charge, please use a compliant charger to avoid damage to the device.

4.2 Battery safety statement

- Replacement of a battery with an incorrect type that can defeat a safeguard (for example, in the case of some lithium battery types);
- Disposal of a battery into fire or a hot oven, or mechanically crushing or cutting a battery, that can result in an explosion;
- Leaving a battery in an extremely high temperature surrounding environment that can result in an explosion or the leakage of flammable liquid or gas;
- A battery subjected to extremely low air pressure that may result in an explosion or the leakage of flammable liquid or gas.

5. Software Refreshing and Debugging Instructions

This product provides two software update methods:

i. OTA mode, supporting software developed by user;

ii. Using Arduino to update the software with steps as followed:

- Unfasten the battery cover screws and take out the battery;
- Use Micro-USB to connect to the inner interface on the side of the battery compartment, and check whether the "switch button" under the interface is on the Boot side.
- Turn on the Arduino to read the software to be refreshed;
- Set the configuration.
- Click the download button to start downloading the software;
- To enter COM debugging mode, switch the "switch button" to the opposite direction.

6. Compliance statement

6.1 FCC compliance statement

This device complies with Part 15 of the FCC Rules. Operation is subject to the following two

conditions: (1) this device may not cause harmful interference, and (2) this device must accept any interference received, including interference that may cause undesired operation.

Changes or modifications not expressly approved by the party responsible for compliance could void the user's authority to operate the equipment.

This equipment has been tested and found to comply with the limits for a Class B digital device, pursuant to Part 15 of the FCC Rules. These limits are designed to provide reasonable protection against harmful interference in a residential installation. This equipment generates, uses and can radiate radio frequency energy and, if not installed and used in accordance with the instructions, may cause harmful interference to radio communications. However, there is no guarantee that interference will not occur in a particular installation.

If this equipment does cause harmful interference to radio or television reception, which can be determined by turning the equipment off and on, the user is encouraged to try to correct the interference by one or more of the following measures:

- Reorient or relocate the receiving antenna.
- Increase the separation between the equipment and receiver.
- Connect the equipment into an outlet on a circuit different from that to which the receiver is connected.
- Consult the dealer or an experienced radio/TV technician for help.

6.2 FCC SAR statement

This equipment complies with FCC radiation exposure limits set forth for an uncontrolled environment. End user must follow the specific operating instructions for satisfying RF exposure compliance. This transmitter must not be co-located or operating in conjunction with any other antenna or transmitter.

The portable device is designed to meet the requirements for exposure to radio waves established by the Federal Communications Commission (USA). These requirements set a SAR limit of 1.6 W/kg averaged over one gram of tissue. The highest SAR value reported under this standard during product certification for use when properly worn on the body.