APPROVAL NUMBER

DATE : Dec. 14. 2023

SHEET NUMBER : Ant-01

SPECIFICATION FOR APPROVAL

LEETEK

DESIGNATION	LORA Internal Pattern Antenna
Part Number	Leetek IN-Ant-01
Model Number	LFW2930-01

R&D			
ISSUE	**CHECKED**	**PM**	**APPROVED**

47, Ojeong-ro, Ojeong-gu, Bucheon-si, Gyeonggi-do, Republic of Korea

TEL:82-32-324-9838, FAX:82-32-324-9840

Contents

1. General
    1.1. Product Description
    1.2. Product Number
    1.3. Units, Definitions, and Abbreviations
    1.4. Interface
    1.5. Conditions
    1.6. Coordinate System
2. Electrical Properities
    2.1. Frequency Bands
    2.2. Impedance
    2.3. VSWR
    2.4. Gain
    2.5. Power Rating
3. Antenna Drawing
4. Radiation Gain

1. General

1.1. Product Description

LORA Internal antenna for use in a portable unit for wireless communication (referred to as a radio).

1.2. Product Number

LEETEK Product Name : Leetek IN-Ant-01

1.3. Units, Definitions, and Abbreviations

Unless otherwise stated, SI units are used.

TX	Transmit Band
RX	Receiver Band
PCB	Printed Circuit Board
RH	Relative Humidity
dBi	Antenna gain in Db (isotropic)
CW	Continuous Wave

1.4. Interface

All properties are guaranteed under the conditions that antenna/radio interface is designed in accordance with instructions provided by Leetek. Functionality with other equipment (such as couplers etc.) is not guaranteed unless this has been agreed upon separately.

1.5. Conditions

Unless otherwise stated all temperature tolerances are ±3℃ and all RH tolerances are ±5 percentage units.

Unless otherwise stated all values are valid at 20℃ and 50% RH.

1.6. Coordinate System

The coordinate system for the radio is defined as follows;

. Origin in center of gravity.

. Positive X axis is perpendicular to, and directed from, front plane.

. Positive Y axis is perpendicular to, and directed from, right side plane(as seen from front).

Positive Z axis is perpendicular to, and directed from, top plane.

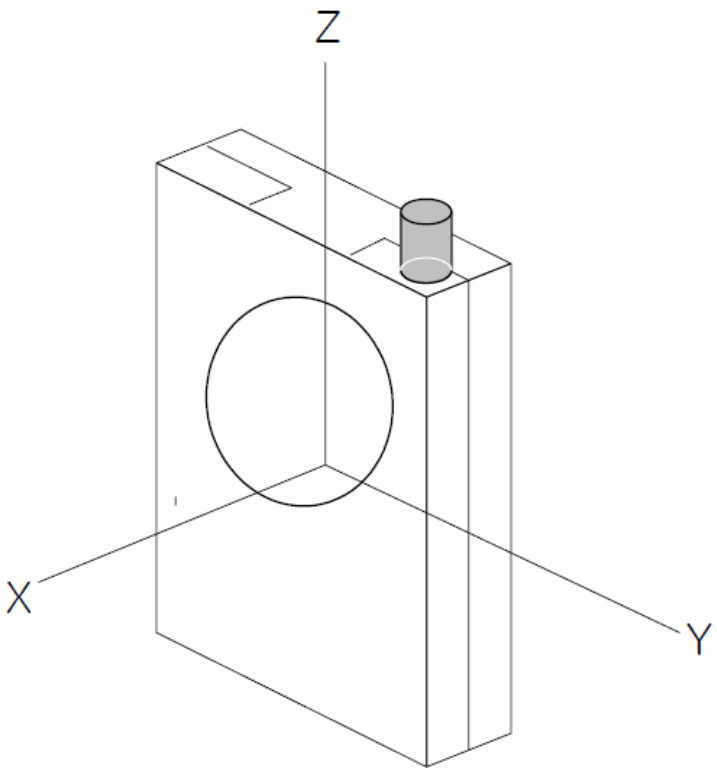

Figure 1.6.1 Coordinate system for the radio.

2. Electrical Properties

2.1. Frequency Band

2.1.1 LORA Band : 902 ~ 928MHz

2.2. Impedance

2.2.1 Nominal Value

50 Ohms

2.2.2 Method

Leetek will supply engineering assistance to ensure that the impedance Over the frequency bands is as close to 50 ohms as possible after matching. Both free space and talk position are considered, with priority given to talk position.

2.3. VSWR

Below are listed the maximum values of the worst matched frequency within each band including production variation influences.

2.3.1 VSWR at Free Space

902MHz : 2.3, 915MHz : 2.2, 928MHz : 2.2

2.3.2 Tolerance of Center Frequency

Center Frequency at Lora Band : Standard ±15MHz

2.3.3 Method of Measurement

A 50 ohms coaxial cable is connected(soldered) to the 50 ohm feeding point on the PCB. The connection of the coaxial cable is done so as to introduce a minimum of mismatch. In the other end, the coaxial cable is connected to a network analyzer. The analyzer is

calibrated so that the reference plane is at the 50 ohms feeding point.. The radio, including the PCB must not in any significant way differ from the mass produced radio, e.g. the antenna feeding parts have to be equivalent to the parts in mass production. Free space means that the radio is attached to a nonconductive surface.

2.3.3 Electrical Performance Assurance

Sampling Plan

2.4. Gain

Below are average gain values of the frequency with the lowest peak gain within each band including production variation influences.

2.4.1 Values

Unit	Lora		
	902MHz	915MHz	928MHz
(dBi)	-8.47	-9.02	-9.63

2.4.2 Method of Measurement

The connection is done according to 2.3.2, Radiation patterns are measured at the TX and RX band edges for each band defined in 2.1.1 and 2.1.2. The measurements are Performed so as to minimize the influence of the cables.

Only the coplanar polarization component is measured.

The antenna is measure in 2 orthogonal E-planes in free space, according to figure 2.4.1. The antenna is also measured in talk position. Calibration for absolute measurements is done with a reference antenna, which is in turn calibrated by a certified calibration company.

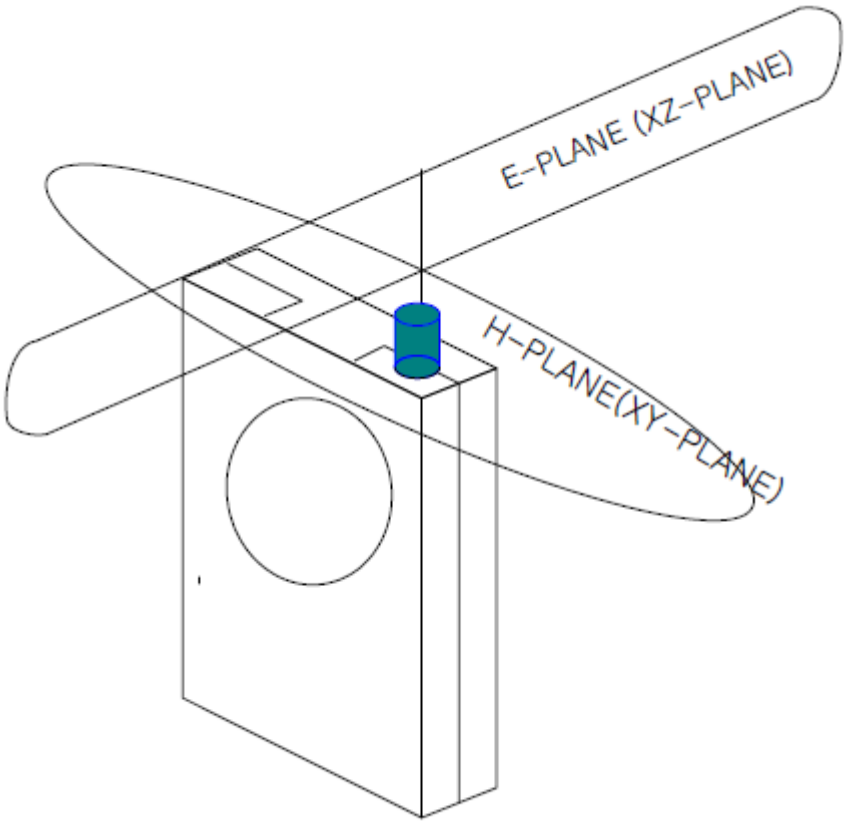

Figure 2.4.1

2.5 Power Rating

2.5.1 Maximum Value

P = 100mW (CW)

2.5.2 Post Test requirements

Without mechanical damage and electrical performance according to 2.3.1 and 2.4.1, after the test.

2.5.3 Method of Measurement

The connection is done according 2.31. The specified power, P, is applied for 10 minutes at the middle frequency of each TX band defined in 2.1.1. Immediately after the test the VSWR is measured.

3. Antenna Drawing

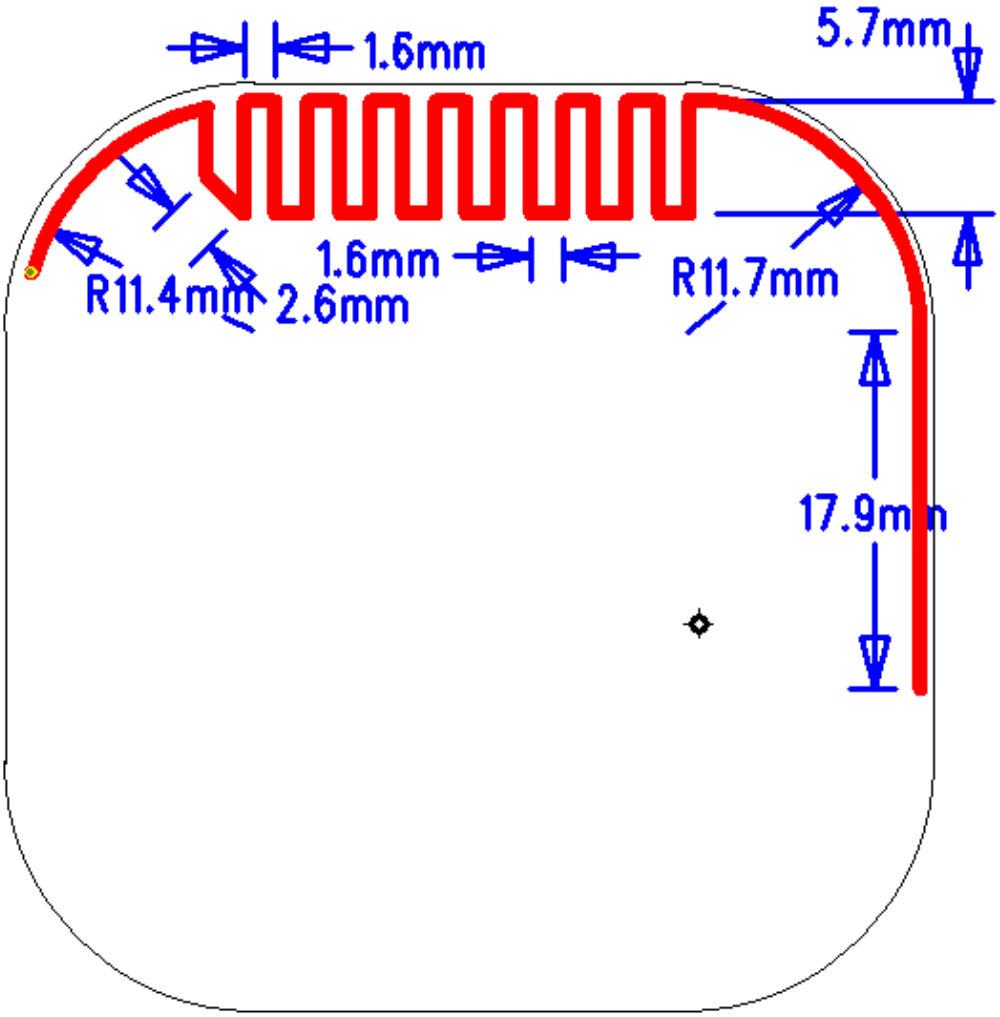

4. Radiation Gain

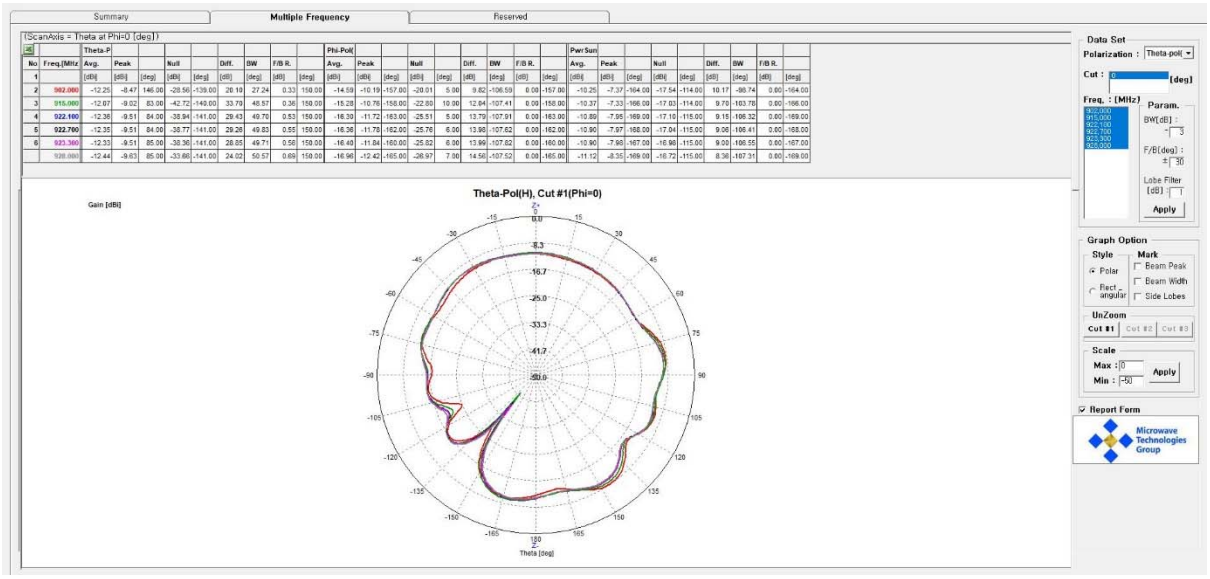

Summary | **Multiple Frequency** | Reserved

(ScanAxis = Theta at Phi=0 (deg))

No	Freq.(MHz	Theta-P Avg.	Peak		Null		Diff.	BW	F/B R.		Phi-Pol(Avg.	Peak		Null		Diff.	BW	F/B R.		Pwr Sun Avg.	Peak		Null		Diff.	BW	F/B R.	
1		[dBi]	[dBi]	[deg]	[dBi]	[deg]	[dBi]	[deg]	[dBi]	[deg]	[dBi]	[dBi]	[deg]	[dBi]	[deg]	[dBi]	[deg]	[dBi]	[deg]	[dBi]	[dBi]	[deg]	[dBi]	[deg]	[dBi]	[deg]	[dBi]	[deg]
2	902.000	-12.25	-8.47	146.00	-28.56	-139.00	26.19	27.24	0.33	159.00	-14.59	-10.19	-157.00	-20.01	5.90	9.82	-106.59	6.00	-157.00	-10.25	-7.37	-164.00	-17.54	-114.00	10.17	-98.74	0.00	-164.00
3	915.000	-12.07	-9.02	83.00	-42.72	-149.00	33.79	48.57	0.36	159.00	-15.28	-10.76	-158.00	-22.80	10.90	12.64	-107.41	6.00	-158.00	-10.37	-7.33	-166.00	-17.03	-114.00	9.70	-103.78	0.00	-166.00
4	922.100	-12.36	-9.51	84.00	-38.94	-141.00	29.43	49.76	0.53	159.00	-16.39	-11.72	-163.00	-25.51	5.00	13.79	-107.91	6.00	-163.00	-10.89	-7.95	-169.00	-17.10	-115.00	9.15	-106.32	0.00	-169.00
5	922.700	-12.35	-9.51	84.00	-38.77	-141.00	29.26	49.83	0.55	159.00	-16.36	-11.78	-162.00	-25.76	6.00	13.98	-107.62	6.00	-162.00	-10.90	-7.97	-168.00	-17.04	-115.00	9.06	-106.41	0.00	-168.00
6	923.300	-12.33	-9.51	85.00	-38.36	-141.00	28.85	49.71	0.58	159.00	-16.43	-11.84	-160.00	-25.82	6.00	13.99	-107.62	6.00	-160.00	-10.90	-7.96	-167.00	-16.98	-115.00	9.00	-106.55	0.00	-167.00
	928.000	-12.44	-9.63	85.00	-33.66	-141.00	24.02	50.57	0.69	159.00	-16.96	-12.42	-165.00	-26.97	7.00	14.58	-107.52	6.00	-165.00	-11.12	-8.35	-169.00	-16.72	-115.00	8.38	-107.31	0.00	-169.00

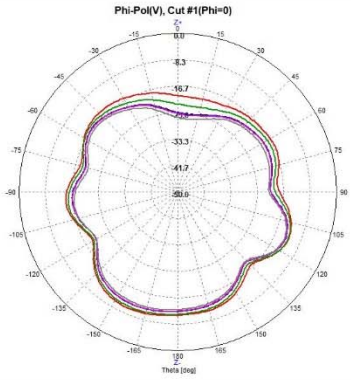

Data Set
Polarization : Phi-pol(V)
Cut : 0 [deg]
Freq. : [MHz] 902.000, 915.000, 922.100, 922.700, 923.300, 928.000
Param. BW[dB] : 3 F/B[deg] : ±30
Lobe Filter [dB]
Apply
Graph Option
Style: Polar, Rect-angular
Mark: Beam Peak, Beam Width, Side Lobes
UnZoom: Cut #1, Cut #2, Cut #3
Scale Max : 0 Min : -50 Apply
Report Form
Microwave Technologies Group

Summary | **Multiple Frequency** | Reserved

(ScanAxis = Theta at Phi=90 (deg))

No	Freq.(MHz	Theta-P Avg.	Peak		Null		Diff.	BW	F/B R.		Phi-Pol(Avg.	Peak		Null		Diff.	BW	F/B R.		Pwr Sun Avg.	Peak		Null		Diff.	BW	F/B R.	
1		[dBi]	[dBi]	[deg]	[dBi]	[deg]	[dBi]	[deg]	[dBi]	[deg]	[dBi]	[dBi]	[deg]	[dBi]	[deg]	[dBi]	[deg]	[dBi]	[deg]	[dBi]	[dBi]	[deg]	[dBi]	[deg]	[dBi]	[deg]	[dBi]	[deg]
2	902.000	-17.49	-11.63	157.00	-44.95	-79.00	33.32	-129.42	0.00	157.00	-13.08	-10.81	-179.00	-17.39	149.00	6.58	-139.00	6.00	-179.00	-11.74	-8.57	179.00	-15.97	-83.00	7.41	-123.82	0.00	179.00
3	915.000	-18.00	-11.81	170.00	-41.66	93.00	29.85	-128.52	0.00	170.00	-11.99	-9.79	9.00	-16.36	150.00	6.58	82.69	6.47	-179.00	-11.82	-8.09	178.00	-15.09	85.00	7.01	-131.40	0.00	178.00
4	922.100	-18.82	-12.38	173.00	-54.64	94.00	42.26	-129.92	0.00	173.00	-12.09	-9.82	12.00	-16.49	150.00	6.67	121.44	6.99	-179.00	-11.25	-8.58	-180.00	-15.33	85.00	6.75	-132.26	0.00	-180.00
5	922.700	-18.86	-12.42	171.00	-52.20	94.00	39.78	-130.16	0.00	171.00	-12.07	-9.86	8.00	-16.47	150.00	6.68	121.47	6.92	-179.00	-11.25	-8.60	-180.00	-15.31	84.00	6.72	-132.16	0.00	-180.00
6	923.300	-18.89	-12.43	171.00	-50.85	94.00	37.62	-130.02	0.00	171.00	-12.05	-9.79	10.00	-16.46	151.00	6.67	121.65	6.96	-179.00	-11.23	-8.61	178.00	-15.29	84.00	6.68	-133.11	0.00	178.00
	928.000	-19.21	-12.65	173.00	-47.61	96.00	34.96	-131.36	0.00	173.00	-11.97	-9.78	11.00	-16.37	150.00	6.66	122.91	1.00	-179.00	-11.22	-8.75	178.00	-15.29	85.00	6.54	-133.86	0.00	178.00

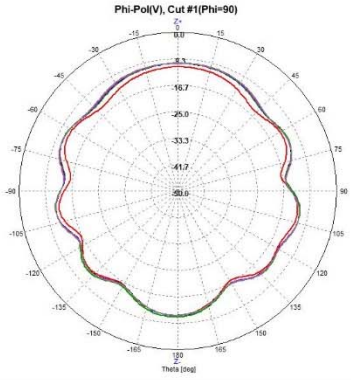

Data Set
Polarization : Phi-pol(V)
Cut : 90 [deg]
Freq. : [MHz] 902.000, 915.000, 922.100, 922.700, 923.300, 928.000
Param. BW[dB] : 3 F/B[deg] : ±30
Lobe Filter [dB]
Apply
Graph Option
Style: Polar, Rect-angular
Mark: Beam Peak, Beam Width, Side Lobes
UnZoom: Cut #1, Cut #2, Cut #3
Scale Max : 0 Min : -50 Apply
Report Form
Microwave Technologies Group

Summary | **Multiple Frequency** | Reserved

(ScanAxis = Theta at Phi=90 (deg))

No	Freq.(MHz	Theta-P Avg.	Peak		Null		Diff.	BW	F/B R.		Phi-Pol(Avg.	Peak		Null		Diff.	BW	F/B R.		Pwr Sun Avg.	Peak		Null		Diff.	BW	F/B R.	
1		[dBi]	[dBi]	[deg]	[dBi]	[deg]	[dBi]	[deg]	[dBi]	[deg]	[dBi]	[dBi]	[deg]	[dBi]	[deg]	[dBi]	[deg]	[dBi]	[deg]	[dBi]	[dBi]	[deg]	[dBi]	[deg]	[dBi]	[deg]	[dBi]	[deg]
2	902.000	-17.49	-11.63	157.00	-44.95	-79.00	33.32	-129.42	0.00	157.00	-13.08	-10.81	-179.00	-17.39	149.00	6.58	-139.00	6.00	-179.00	-11.74	-8.57	179.00	-15.97	-83.00	7.41	-123.82	0.00	179.00
3	915.000	-18.00	-11.81	170.00	-41.66	93.00	29.85	-128.52	0.00	170.00	-11.99	-9.79	9.00	-16.36	150.00	6.58	82.69	6.47	-179.00	-11.82	-8.09	178.00	-15.09	85.00	7.01	-131.40	0.00	178.00
4	922.100	-18.82	-12.38	173.00	-54.64	94.00	42.26	-129.92	0.00	173.00	-12.09	-9.82	12.00	-16.49	150.00	6.67	121.44	6.99	-179.00	-11.25	-8.58	-180.00	-15.33	85.00	6.75	-132.26	0.00	-180.00
5	922.700	-18.86	-12.42	171.00	-52.20	94.00	39.78	-130.16	0.00	171.00	-12.07	-9.86	8.00	-16.47	150.00	6.68	121.47	6.92	-179.00	-11.25	-8.60	-180.00	-15.31	84.00	6.72	-132.16	0.00	-180.00
6	923.300	-18.89	-12.43	171.00	-50.85	94.00	37.62	-130.02	0.00	171.00	-12.05	-9.79	10.00	-16.46	151.00	6.67	121.65	6.96	-179.00	-11.23	-8.61	178.00	-15.29	84.00	6.68	-133.11	0.00	178.00
	928.000	-19.21	-12.65	173.00	-47.61	96.00	34.96	-131.36	0.00	173.00	-11.97	-9.78	11.00	-16.37	150.00	6.66	122.91	1.00	-179.00	-11.22	-8.75	178.00	-15.29	85.00	6.54	-133.86	0.00	178.00

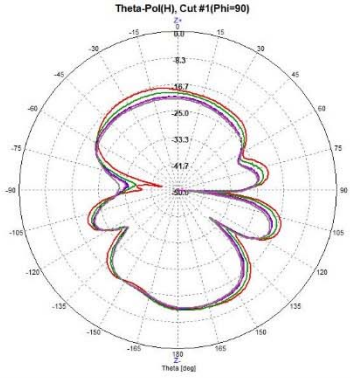

Data Set
Polarization : Theta-pol(
Cut : 90 [deg]
Freq. : [MHz] 902.000, 915.000, 922.100, 922.700, 923.300, 928.000
Param. BW[dB] : 3 F/B[deg] : ±30
Lobe Filter [dB]
Apply
Graph Option
Style: Polar, Rect-angular
Mark: Beam Peak, Beam Width, Side Lobes
UnZoom: Cut #1, Cut #2, Cut #3
Scale Max : 0 Min : -50 Apply
Report Form
Microwave Technologies Group

Summary | Multiple Frequency | Reserved

Operator : Operator Name
Date : 2023-11-17
Customer : Customer Name
Time : 오후 2:08:46
Description : Test Descriptions

Antenna Type
- (●) Linear Polarization Type
- ( ) Circular Polarization Type

2D Result Summary : (ScanAxis = Theta at Phi=0 [deg])

		Theta-Pc					Phi-Pol(\					PwrSum				
No	Freq.[MHz]	Avg.[dBi]	Peak[dBi]	Theta[	Null[dBi]	Theta[	Avg.[dBi]	Peak[dBi]	Theta[	Null[dBi]	Theta[	Avg.[dBi]	Peak[dBi]	Theta[	Null[dBi]	Theta[
1	902.000	-12.25	-8.47	146.00	-28.56	-139.00	-14.59	-10.19	-157.00	-20.01	5.00	-10.25	-7.37	-164.00	-17.54	-114.00
2	915.000	-12.07	-9.02	83.00	-42.72	-140.00	-15.28	-10.76	-158.00	-22.80	10.00	-10.37	-7.33	-166.00	-17.03	-114.00
3	922.100	-12.36	-9.51	84.00	-38.94	-141.00	-16.30	-11.72	-163.00	-25.51	5.00	-10.89	-7.95	-169.00	-17.10	-115.00
4	922.700	-12.35	-9.51	84.00	-38.77	-141.00	-16.36	-11.78	-162.00	-25.76	6.00	-10.90	-7.97	-168.00	-17.04	-115.00
5	923.300	-12.33	-9.51	85.00	-38.36	-141.00	-16.40	-11.84	-160.00	-25.82	6.00	-10.90	-7.98	-167.00	-16.98	-115.00
6	928.000	-12.44	-9.63	85.00	-33.66	-141.00	-16.96	-12.42	-165.00	-26.97	7.00	-11.12	-8.35	-169.00	-16.72	-115.00

Microwave Technologies Group

Summary | **Multiple Frequency** | Reserved

(ScanAxis = Theta at Phi=0 [deg])

No	Freq.[MHz	Theta-P Avg. [dBi]	Peak [dBi]	[deg]	Null [dBi]	[deg]	Diff. [dB]	BW [deg]	F/B R. [dB]	[deg]	Phi-Pol(Avg. [dBi]	Peak [dBi]	[deg]	Null [dBi]	[deg]	Diff. [dB]	BW [deg]	F/B R. [dB]	[deg]	PwrSun Avg. [dBi]	Peak [dBi]	[deg]	Null [dBi]	[deg]	Diff. [dB]	BW [deg]	F/B R. [dB]	[deg]
1																												
2	902.000	-12.25	-8.47	146.00	-28.56	-139.00	20.10	27.24	0.33	150.00	-14.59	-10.19	-157.00	-20.01	5.00	9.82	-106.59	0.00	-157.00	-10.25	-7.37	-164.00	-17.54	-114.00	10.17	-98.74	0.00	-164.00
3	915.000	-12.07	-9.02	83.00	-42.72	-140.00	33.70	48.57	0.36	150.00	-15.28	-10.76	-158.00	-22.80	10.00	12.04	-107.41	0.00	-158.00	-10.37	-7.33	-166.00	-17.03	-114.00	9.70	-103.78	0.00	-166.00
4	922.100	-12.36	-9.51	84.00	-38.94	-141.00	29.43	49.70	0.53	150.00	-16.30	-11.72	-163.00	-25.51	5.00	13.79	-107.91	0.00	-163.00	-10.89	-7.95	-169.00	-17.10	-115.00	9.15	-106.32	0.00	-169.00
5	922.700	-12.35	-9.51	84.00	-38.77	-141.00	29.26	49.83	0.55	150.00	-16.36	-11.78	-162.00	-25.76	6.00	13.98	-107.62	0.00	-162.00	-10.90	-7.97	-168.00	-17.04	-115.00	9.06	-106.41	0.00	-168.00
6	923.300	-12.33	-9.51	85.00	-38.36	-141.00	28.85	49.71	0.56	150.00	-16.40	-11.84	-160.00	-25.82	6.00	13.99	-107.82	0.00	-160.00	-10.90	-7.98	-167.00	-16.98	-115.00	9.00	-106.55	0.00	-167.00
	928.000	-12.44	-9.63	85.00	-33.66	-141.00	24.02	50.57	0.69	150.00	-16.96	-12.42	-165.00	-26.97	7.00	14.56	-107.52	0.00	-165.00	-11.12	-8.35	-169.00	-16.72	-115.00	8.36	-107.31	0.00	-169.00

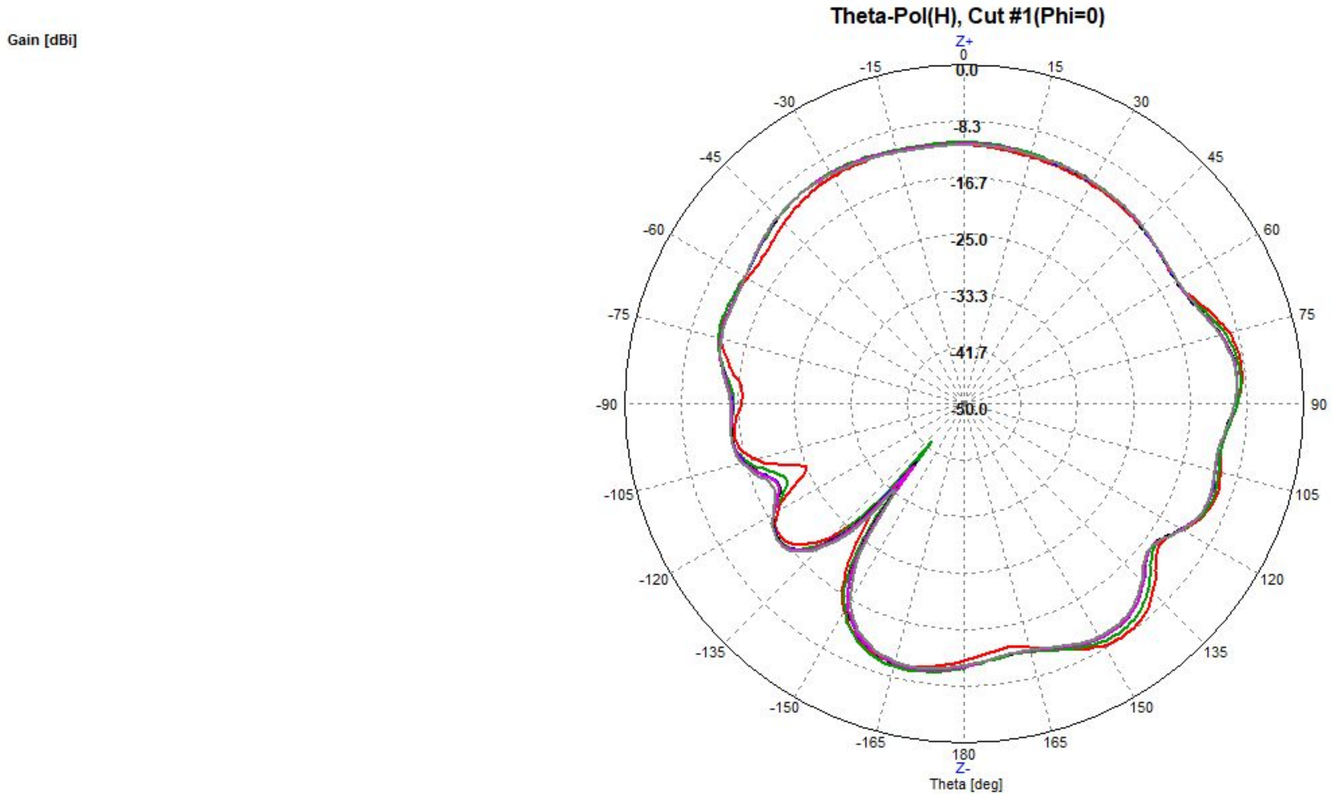

Data Set

Polarization : Theta-pol(

Cut : 0 [deg]

Freq. : [MHz]

902,000
915,000
922,100
922,700
923,300
928,000

Param.

BW[dB] : -3

F/B[deg] : ±30

Lobe Filter [dB] : 1

Apply

Graph Option

Style: Polar / Rect_angular

Mark: Beam Peak / Beam Width / Side Lobes

UnZoom

Cut #1 | Cut #2 | Cut #3

Scale

Max : 0

Min : -50

Apply

☑ Report Form

Microwave Technologies Group

Summary | **Multiple Frequency** | Reserved

(ScanAxis = Theta at Phi=0 [deg])

No	Freq.[MHz	Theta-P Avg. [dBi]	Peak [dBi]	[deg]	Null [dBi]	[deg]	Diff. [dB]	BW [deg]	F/B R. [dB]	[deg]	Phi-Pol(Avg. [dBi]	Peak [dBi]	[deg]	Null [dBi]	[deg]	Diff. [dB]	BW [deg]	F/B R. [dB]	[deg]	PwrSun Avg. [dBi]	Peak [dBi]	[deg]	Null [dBi]	[deg]	Diff. [dB]	BW [deg]	F/B R. [dB]	[deg]
1																												
2	902.000	-12.25	-8.47	146.00	-28.56	-139.00	20.10	27.24	0.33	150.00	-14.59	-10.19	-157.00	-20.01	5.00	9.82	-106.59	0.00	-157.00	-10.25	-7.37	-164.00	-17.54	-114.00	10.17	-98.74	0.00	-164.00
3	915.000	-12.07	-9.02	83.00	-42.72	-140.00	33.70	48.57	0.36	150.00	-15.28	-10.76	-158.00	-22.80	10.00	12.04	-107.41	0.00	-158.00	-10.37	-7.33	-166.00	-17.03	-114.00	9.70	-103.78	0.00	-166.00
4	922.100	-12.36	-9.51	84.00	-38.94	-141.00	29.43	49.70	0.53	150.00	-16.30	-11.72	-163.00	-25.51	5.00	13.79	-107.91	0.00	-163.00	-10.89	-7.95	-169.00	-17.10	-115.00	9.15	-106.32	0.00	-169.00
5	922.700	-12.35	-9.51	84.00	-38.77	-141.00	29.26	49.83	0.55	150.00	-16.36	-11.78	-162.00	-25.76	6.00	13.98	-107.62	0.00	-162.00	-10.90	-7.97	-168.00	-17.04	-115.00	9.06	-106.41	0.00	-168.00
6	923.300	-12.33	-9.51	85.00	-38.36	-141.00	28.85	49.71	0.56	150.00	-16.40	-11.84	-160.00	-25.82	6.00	13.99	-107.82	0.00	-160.00	-10.90	-7.98	-167.00	-16.98	-115.00	9.00	-106.55	0.00	-167.00
	928.000	-12.44	-9.63	85.00	-33.66	-141.00	24.02	50.57	0.69	150.00	-16.96	-12.42	-165.00	-26.97	7.00	14.56	-107.52	0.00	-165.00	-11.12	-8.35	-169.00	-16.72	-115.00	8.36	-107.31	0.00	-169.00

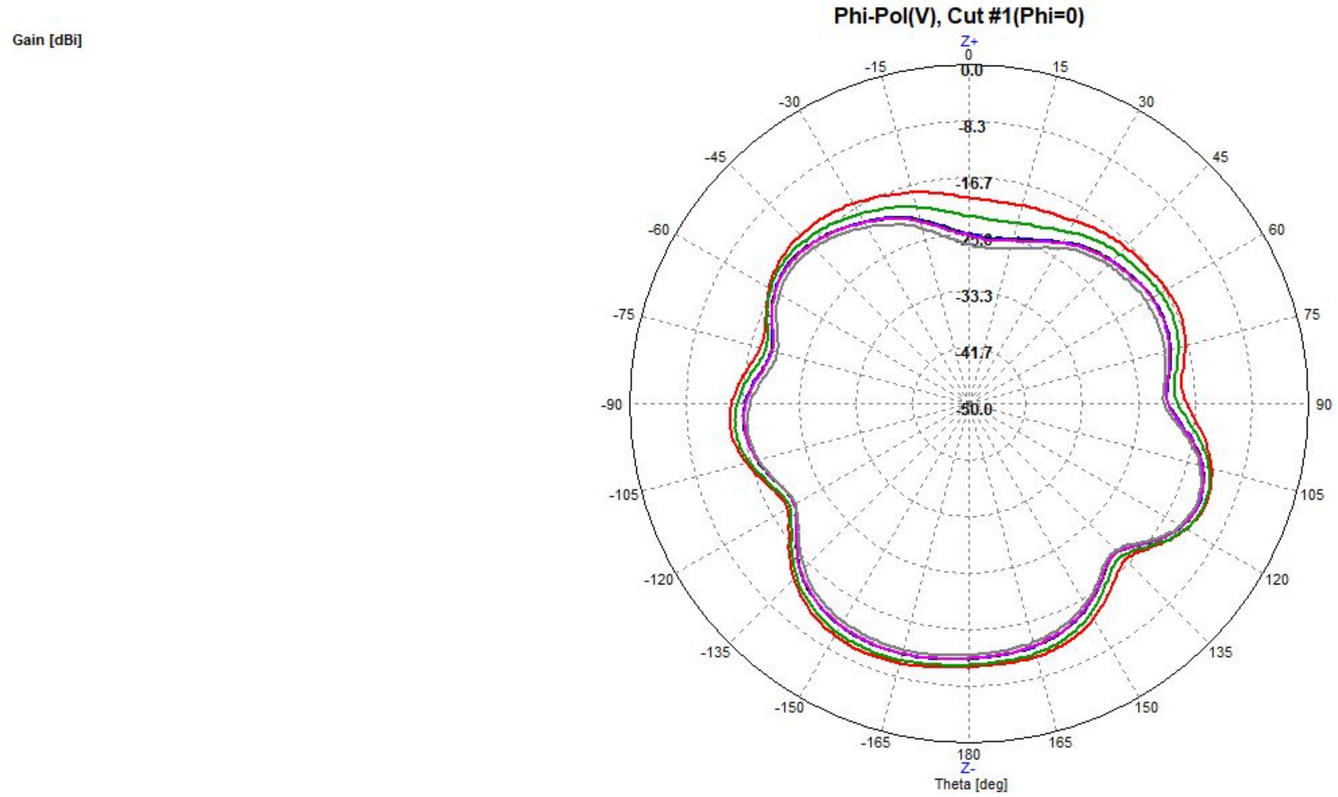

Data Set

Polarization : Phi-pol(V)

Cut : 0 [deg]

Freq. : [MHz]

902,000
915,000
922,100
922,700
923,300
928,000

Param.

BW[dB] : -3

F/B[deg] : ±30

Lobe Filter [dB] : 1

Apply

Graph Option

Style: Polar / Rect_angular

Mark: Beam Peak / Beam Width / Side Lobes

UnZoom: Cut #1 | Cut #2 | Cut #3

Scale: Max : 0 Min : -50 Apply

Report Form

Microwave Technologies Group

Summary | Multiple Frequency | Reserved

Operator : Operator Name
Date : 2023-11-17
Customer : Customer Name
Time : 오후 2:16:42
Description : Test Descriptions

Antenna Type
- (●) Linear Polarization Type
- ( ) Circular Polarization Type

2D Result Summary : (ScanAxis = Theta at Phi=90 [deg])

		Theta-Pc					Phi-Pol(\					PwrSum				
No	Freq.[MHz]	Avg.[dBi]	Peak[dBi]	Theta[	Null[dBi]	Theta[	Avg.[dBi]	Peak[dBi]	Theta[	Null[dBi]	Theta[	Avg.[dBi]	Peak[dBi]	Theta[	Null[dBi]	Theta[
1	902.000	-17.49	-11.63	157.00	-44.95	-79.00	-13.08	-10.81	-179.00	-17.39	149.00	-11.74	-8.57	179.00	-15.97	-83.00
2	915.000	-18.00	-11.81	170.00	-41.66	93.00	-11.99	-9.79	9.00	-16.36	150.00	-11.02	-8.09	178.00	-15.09	85.00
3	922.100	-18.82	-12.38	173.00	-54.64	94.00	-12.09	-9.82	12.00	-16.49	150.00	-11.25	-8.58	-180.00	-15.33	85.00
4	922.700	-18.86	-12.42	171.00	-52.20	94.00	-12.07	-9.80	8.00	-16.47	150.00	-11.25	-8.60	-180.00	-15.31	84.00
5	923.300	-18.89	-12.43	171.00	-50.05	94.00	-12.05	-9.79	10.00	-16.46	151.00	-11.23	-8.61	178.00	-15.29	84.00
6	928.000	-19.21	-12.65	173.00	-47.61	96.00	-11.97	-9.70	11.00	-16.37	150.00	-11.22	-8.75	178.00	-15.29	85.00

Microwave Technologies Group

Summary | **Multiple Frequency** | Reserved

(ScanAxis = Theta at Phi=90 [deg])

No	Freq.[MHz	Theta-P Avg. [dBi]	Peak [dBi]	[deg]	Null [dBi]	[deg]	Diff. [dB]	BW [deg]	F/B R. [dB]	[deg]	Phi-Pol(Avg. [dBi]	Peak [dBi]	[deg]	Null [dBi]	[deg]	Diff. [dB]	BW [deg]	F/B R. [dB]	[deg]	PwrSun Avg. [dBi]	Peak [dBi]	[deg]	Null [dBi]	[deg]	Diff. [dB]	BW [deg]	F/B R. [dB]	[deg]
1																												
2	902.000	-17.49	-11.63	157.00	-44.95	-79.00	33.32	-129.42	0.00	157.00	-13.08	-10.81	-179.00	-17.39	149.00	6.58	-139.80	0.00	-179.00	-11.74	-8.57	179.00	-15.97	-83.00	7.41	-123.82	0.00	179.00
3	915.000	-18.00	-11.81	170.00	-41.66	93.00	29.85	-128.52	0.00	170.00	-11.99	-9.79	9.00	-16.36	150.00	6.58	82.69	0.47	-179.00	-11.02	-8.09	178.00	-15.09	85.00	7.01	-131.40	0.00	178.00
4	922.100	-18.82	-12.38	173.00	-54.64	94.00	42.25	-129.92	0.00	173.00	-12.09	-9.82	12.00	-16.49	150.00	6.67	121.44	0.90	-179.00	-11.25	-8.58	-180.00	-15.33	85.00	6.75	-132.26	0.00	-180.00
5	922.700	-18.86	-12.42	171.00	-52.20	94.00	39.78	-130.16	0.00	171.00	-12.07	-9.80	8.00	-16.47	150.00	6.68	121.47	0.92	-179.00	-11.25	-8.60	-180.00	-15.31	84.00	6.72	-132.16	0.00	-180.00
6	923.300	-18.89	-12.43	171.00	-50.05	94.00	37.62	-130.02	0.00	171.00	-12.05	-9.79	10.00	-16.46	151.00	6.67	121.85	0.96	-179.00	-11.23	-8.61	178.00	-15.29	84.00	6.68	-133.11	0.00	178.00
	928.000	-19.21	-12.65	173.00	-47.61	96.00	34.96	-131.38	0.00	173.00	-11.97	-9.70	11.00	-16.37	150.00	6.66	122.91	1.08	-179.00	-11.22	-8.75	178.00	-15.29	85.00	6.54	-133.80	0.00	178.00

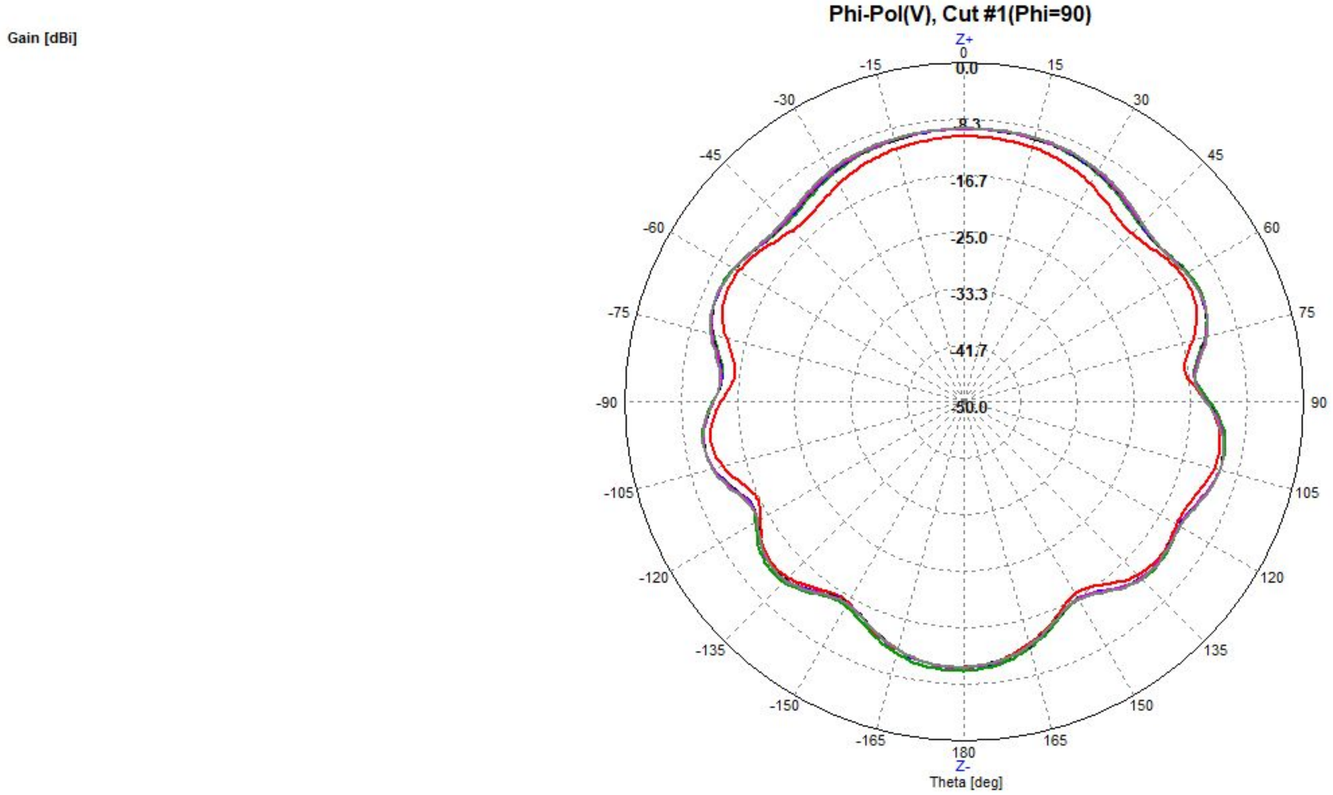

Data Set

Polarization : Phi-pol(V)

Cut : 90 [deg]

Freq. : [MHz]
902.000
915.000
922.100
922.700
923.300
928.000

Param.

BW[dB] : -3

F/B[deg] : ±30

Lobe Filter [dB] : 1

Apply

Graph Option

Style: Polar / Rect_angular

Mark: Beam Peak / Beam Width / Side Lobes

UnZoom: Cut #1 | Cut #2 | Cut #3

Scale: Max : 0 Min : -50 Apply

Report Form

Microwave Technologies Group

Summary | **Multiple Frequency** | Reserved

(ScanAxis = Theta at Phi=90 [deg])

No	Freq.[MHz	Theta-P Avg. [dBi]	Peak [dBi]	[deg]	Null [dBi]	[deg]	Diff. [dB]	BW [deg]	F/B R. [dB]	[deg]	Phi-Pol(Avg. [dBi]	Peak [dBi]	[deg]	Null [dBi]	[deg]	Diff. [dB]	BW [deg]	F/B R. [dB]	[deg]	PwrSun Avg. [dBi]	Peak [dBi]	[deg]	Null [dBi]	[deg]	Diff. [dB]	BW [deg]	F/B R. [dB]	[deg]
1																												
2	902.000	-17.49	-11.63	157.00	-44.95	-79.00	33.32	-129.42	0.00	157.00	-13.08	-10.81	-179.00	-17.39	149.00	6.58	-139.80	0.00	-179.00	-11.74	-8.57	179.00	-15.97	-83.00	7.41	-123.82	0.00	179.00
3	915.000	-18.00	-11.81	170.00	-41.66	93.00	29.85	-128.52	0.00	170.00	-11.99	-9.79	9.00	-16.36	150.00	6.58	82.69	0.47	-179.00	-11.02	-8.09	178.00	-15.09	85.00	7.01	-131.40	0.00	178.00
4	922.100	-18.82	-12.38	173.00	-54.64	94.00	42.25	-129.92	0.00	173.00	-12.09	-9.82	12.00	-16.49	150.00	6.67	121.44	0.90	-179.00	-11.25	-8.58	-180.00	-15.33	85.00	6.75	-132.26	0.00	-180.00
5	922.700	-18.86	-12.42	171.00	-52.20	94.00	39.78	-130.16	0.00	171.00	-12.07	-9.80	8.00	-16.47	150.00	6.68	121.47	0.92	-179.00	-11.25	-8.60	-180.00	-15.31	84.00	6.72	-132.16	0.00	-180.00
6	923.300	-18.89	-12.43	171.00	-50.05	94.00	37.62	-130.02	0.00	171.00	-12.05	-9.79	10.00	-16.46	151.00	6.67	121.85	0.96	-179.00	-11.23	-8.61	178.00	-15.29	84.00	6.68	-133.11	0.00	178.00
	928.000	-19.21	-12.65	173.00	-47.61	96.00	34.96	-131.38	0.00	173.00	-11.97	-9.70	11.00	-16.37	150.00	6.66	122.91	1.08	-179.00	-11.22	-8.75	178.00	-15.29	85.00	6.54	-133.80	0.00	178.00

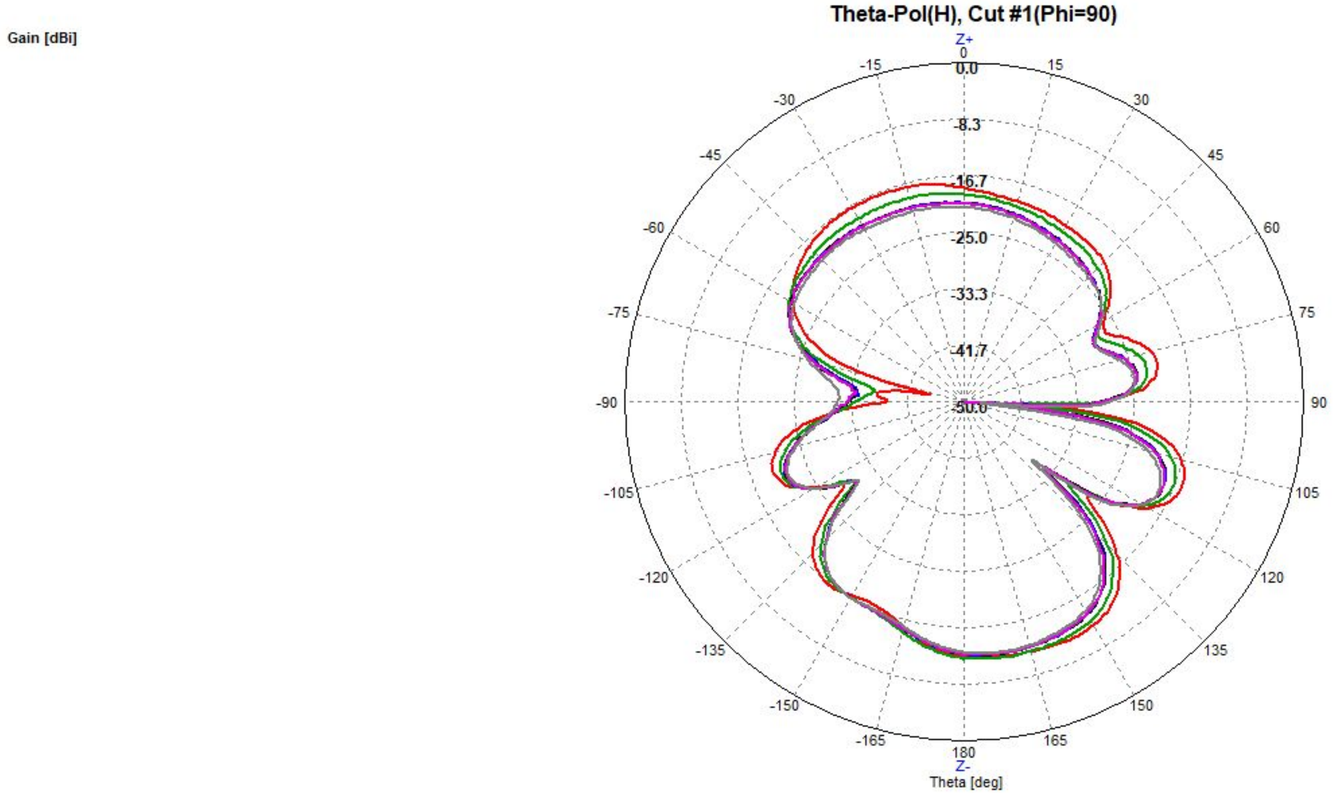

Data Set

Polarization : Theta-pol(

Cut : 90 [deg]

Freq. : [MHz]

902,000
915,000
922,100
922,700
923,300
928,000

Param.

BW[dB] : -3

F/B[deg] : ±30

Lobe Filter [dB] : 1

Apply

Graph Option

Style: Polar / Rect_angular

Mark: Beam Peak / Beam Width / Side Lobes

UnZoom: Cut #1 | Cut #2 | Cut #3

Scale: Max : 0 Min : -50 Apply

Report Form

Microwave Technologies Group