Instructions for use

•Side brushes: *recommended monthly cleaning

1. Turn over the cleaner and pull out the side brush.
2. Remove and use the hair cleaning tool to shave off the entangled objects.

•Note:

It is recommended to replace the side brush every 3-6 months to ensure the cleaning effect.

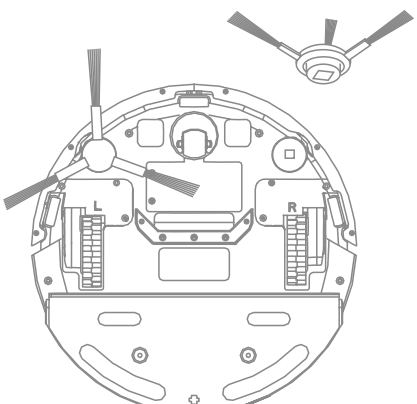

Charging stand

*It is recommended to clean the charging stand with a soft dry cloth every month

Daily maintenance

•The cleaner sensor

Wipe and clean the sensors of the cleaner with a soft dry cloth, including:

1. Three cliff sensors at the bottom of the cleaner
2. Sensors along the wall on the right side of the cleaner
3. Charging contacts at the bottom of the cleaner

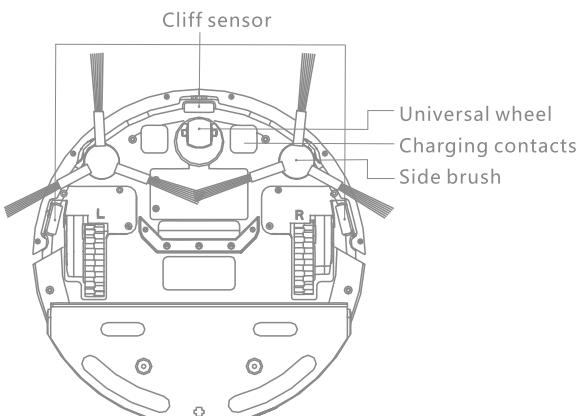

Software upgrade

The cleaner software can be upgraded by using the mobile phone . Before upgrading, please connect the charging stand and ensure that the power is greater than 20%.

The ⌂ ⏻ light flashes white quickly when the firm-ware is upgraded.

Daily maintenance

• Cleaning Tools and Cleaning Filters

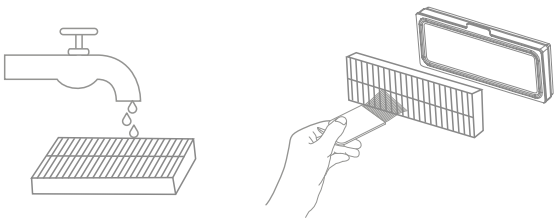

• Dust box and filter *recommended weekly cleaning

1. Open the upper cover of the cleaner, press the dust box buckle and lift up to take out the dust box.

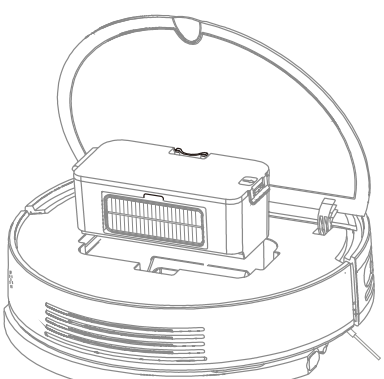

2. Open the dust box cover from the arrow position of the dust box and pour the garbage downwards

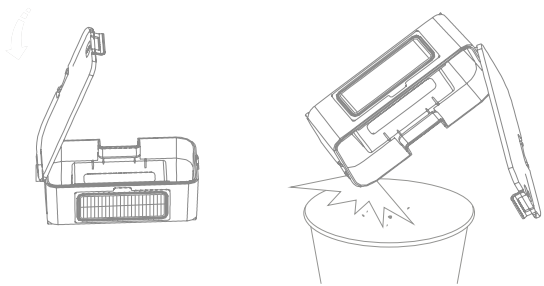

• Clean the washable filter

* Recommended cleaning every two weeks

1. Open the dust box cover from the arrow position of the dust box

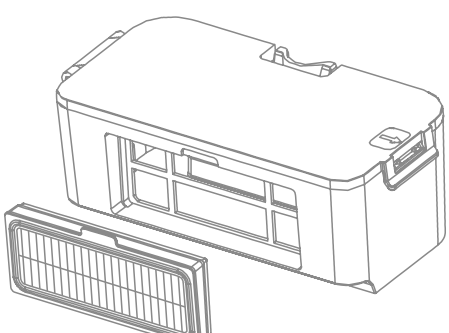

Daily maintenance

2. Pour clean water into the dust box and close the dust box lid. Shake the dust box left and right to pour out the dirty water. Repeat this step several times until the filter is clean.

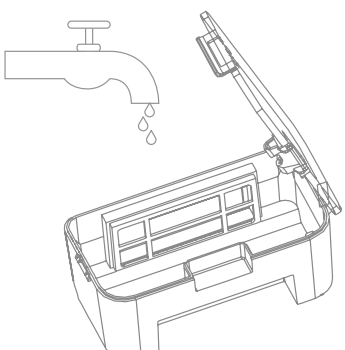

•Note:
Please wash with clean water and do not add any detergent.
Please do not use fingers to clean the filter.

3. Remove the filter, shake the water droplets vigorously, and dry the filter until it is completely dry before putting it back for use.

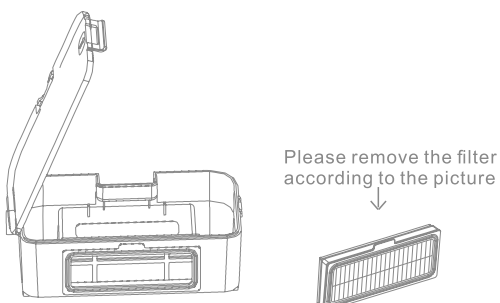

•Note:
Please be sure to dry it before use (at least 24 hours).
It is recommended to rotate the two filters.

Daily maintenance

•Battery:

The cleaner has a built-in high-performance carp ion rechargeable battery pack. To maintain battery performance, please keep the cleaner charged during daily use.

Note: If the clenar do not use it for a long time, please turn it off and store it. Charge it at least once every three months to avoid damage to the battery due to over-discharge.

•Mop *recommended for cleaning every time

1. Remove the mop from the mopping module.

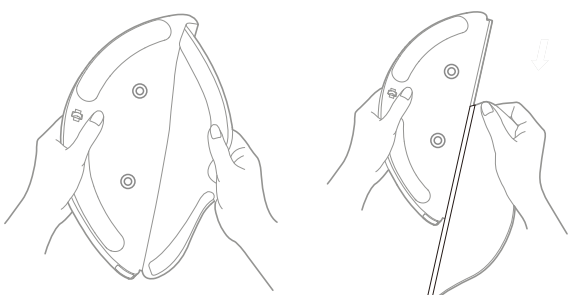

2. Clean the mop and dry it.

•Note:

Be sure to remove the mop for cleaning to avoid dirty water pouring back to block the filter element. If the mop is too dirty, it will affect the mopping effect. Please wash it before using it. It is recommended to replace the mop every 6-12 months to ensure the cleaning effect.

•Water tank drain hole

* recommended weekly cleaning

1. Pressurised rinse with tap water for 1 min.
2. Use the hair cleaning kit to repeatedly wash and brush until water flows normally.

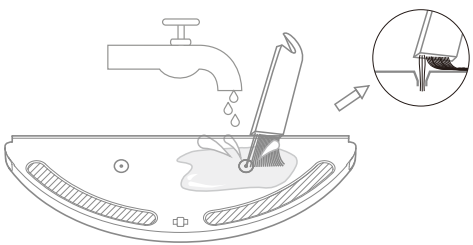

•Universal wheel: *Recommended to clean every month

1. Turn the machine over and pull out the universal wheel.
2. Clean the hair and dirt on the wheel body and axle.
3. Reinstall the wheel body and tighten it.

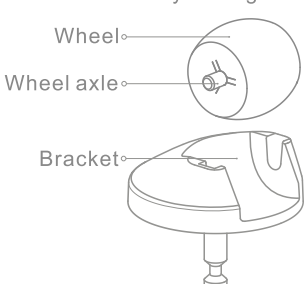

•Note:

It can be rinsed with tap water, dried and then reinstalled.

Basic parameters

• The Cleaner

Name	Parameter
Dimensions	300x300x92mm
Battery	14.4V/2550mAh lithium battery
Product Weight	≈2.24kg
Wireless Connection	AP+Bluetooth
Rated Voltage	14.4V
Rated Power	35W

•Charging stand

Name	Parameter
Dimensions	130x133x78.3mm
Rated power	11.4W
Rated input	19V⎓0.6A
Rated output	19V⎓0.6A
Rated frequency	50/60Hz

The name and content of harmful substances in the product

Part Name	Hazardous Substance					
	(Pb)	(Hg)	(Cd)	(Cr(VI))	(PBB)	(PBDE)
Circuit Board	×	○	○	○	○	○
Metal Parts Case	×	○	○	○	○	○
Battery	○	○	○	○	○	○
Plastic Enclosure	○	○	○	○	○	○
Other Components	○	○	○	○	○	○

This form is prepared according to the provisions of SJ/T 11364.

○ Indicates that the content of the hazardous substance in all homogeneous materials of the part is below the limit requirements specified in GB/T 26572

× Indicates that the content of the hazardous substance in at least one homogeneous material of the component exceeds the limit requirements specified in GB/T 26572

Troubleshooting

When an abnormality occurs during the operation of the cleaner, the ⏻ light flashes red quickly and a voice prompt is issued. Please refer to the following table to solve the fault.

Faults	Solutions
Error 1: The laser head is blocked or stuck, please check.	The laser ranging sensor is blocked or stuck by other objects. Please remove the obstruction or other objects. If it cannot be cleared, please move the console to a new location and start it.
Error 2: The bumper is stuck, please check the robot bumper.	The crash buffer is stuck. Please tap it several times to remove foreign matter. If there are no foreign objects, please move to a new location and start.
Error 3: The right wheel is hanging in the air. Please move the robot to a new position and start cleaning again.	The wheels are hanging in the air, please move to another location to start.
Error 4: The ground detection sensor is abnormal, please check the ground detection sensor	The cleaner is hanging, please move to a new location to start. The cliff sensor may also be caused by being too dirty. Please wipe the cliff sensor clean.
Error 5: The side brush is entangled, please clean the robot side brush.	The side brush may be entangled with foreign matter, please disassemble the side brush and clean it.
Error 6: The wheels are entangled, please clean the robot wheels.	There may be foreign matter wrapped around the main wheel. Please clean it and restart it.
Error 7: The machine is trapped, please free the robot.	The cleaner may be stuck, please clear the obstacles around the cleaner.
Error 8: The battery is too low, please charge	The battery is low, please charge before use.
Error 9: Charging abnormality, please check	The battery temperature is too high or too low. Please wait until the battery temperature becomes normal before using it.
Error 10: The ground is uneven, please move the robot to a new location and start cleaning again	If it is detected that the cleaner is tilted during startup, please place the cleaner on a level ground and restart.

Common faults

Question type	Solution
Can not boot	The battery is low, please charge firstly and then use it again; The battery temperature is too low or too high, please use it in an environment of 0-40”C.
Can't charge	The charging base is not powered on. Please confirm whether both ends of the power cord of the charging base are connected. If the contact is poor, please clean the charging base shrapnel and the cleaner charging contactor. Please confirm whether the charging dock indicator light is on.
Charging rate is slow	When used in high or low temperature environments, the cleaner will automatically reduce the charging speed in order to extend the battery life; The charging contact area may be dirty, please clean the area with a dry cloth.
Unable to recharge	There are too many obstacles near the charging base, please place the charging base in an clean area; The cleaner is too far away from the charging base. Please try placing the cleaner near the charging base.
Abnormal behavior	Power off and then on again.
There is abnormal noise when cleaning	Some objects may be caught in the side brush or main wheel, please clean them after stopping the cleaner; When cleaning, the universal wheel gets dust or becomes entangled. It is recommended to use a screwdriver to remove and clean it.
Cleaning ability is reduced or dust is falling off	The dust box is full, please clean the dust box. The filter has been blocked, please clean the filter.
Can't connect to WiFi	Please clean the main brush.The WiFi function is not activated, please reset the WiFi and try again; The WiFi signal is not good, please make sure that the cleaner is in a coverage area with good WiFi signal; WiFi connection is abnormal, reset WiFi and download the latest APP and try to connect again; WiFi suddenly fails to connect. If you suspect that your home router has a setting error, you can contact customer service in time to help troubleshoot.

Common faults

Question type	Solution
Scheduled cleaning does not workIs	The battery is insufficient and the remaining battery power is more than 20% before scheduled cleaning will be started.
It consuming power when the charging stand is used all the time?	The consumption of the cleaner when it is always on the charging dock is extremely low, which is helpful to keeping the battery at its best performance.
Does it need to be charged for 16 hours for the first three uses?	The lithium battery can be charged at any time without memory effect, and it can be used immediately after being fully charged without waiting for 16 hours.
The mopping module does not produce water or the amount of water produced is small.	Please check whether there is water in the water tank; please use the mobile APP to adjust the water volume to the maximum volume; Please follow the instruction manual to correctly install the mop and mop holder.
The battery ran low during cleaning and was recharged but scanning was not resumed.	Please confirm that the cleaner is not in Non-Disturb mode, as scanning will not continue under this mode; Scanning will not resume after manual recharging or placing the cleaner back into the charging base.
Unable to return to charging base after partial cleaning or moving location	The robot will regenerate the map after partial cleaning or long-distance movement; If the charging base is too far from cleaner , automatic recharging may not be possible. Please manually put the cleaner back into the charging base for charging.
The cleaner suddenly missed sweeping	If it is suspected that the wall sensor or cliff sensor is dirty, it is recommended to clean with a soft dry cloth.

FCC Warning:

Any Changes or modifications not expressly approved by the party responsible for compliance could void the user's authority to operate the equipment.

This device complies with part 15 of the FCC Rules. Operation is subject to the following two conditions:

(1) This device may not cause harmful interference, and

(2) this device must accept any interference received, including interference that may cause undesired operation.

Note: This equipment has been tested and found to comply with the limits for a Class B digital device, pursuant to part 15 of the FCC Rules. These limits are designed to provide reasonable protection against harmful interference in a residential installation. This equipment generates uses and can radiate radio frequency energy and, if not installed and used in accordance with the instructions, may cause harmful interference to radio communications. However, there is no guarantee that interference will not occur in a particular installation. If this equipment does cause harmful interference to radio or television reception, which can be determined by turning the equipment off and on, the user is encouraged to try to correct the interference by one or more of the following measures:

-Reorient or relocate the receiving antenna.

-Increase the separation between the equipment and receiver.

-Connect the equipment into an outlet on a circuit different from that to which the receiver is connected.

-Consult the dealer or an experienced radio/TV technician for help.

This transmitter must not be co-located or operating in conjunction with any other antenna or transmitter. This equipment complies with FCC radiation exposure limits set forth for an uncontrolled environment. This equipment should be installed and operated with minimum distance 20cm between the radiator & your body.