T1

INSTRUCTIONS MANUAL

ROBOTIC VACUUM CLEANER

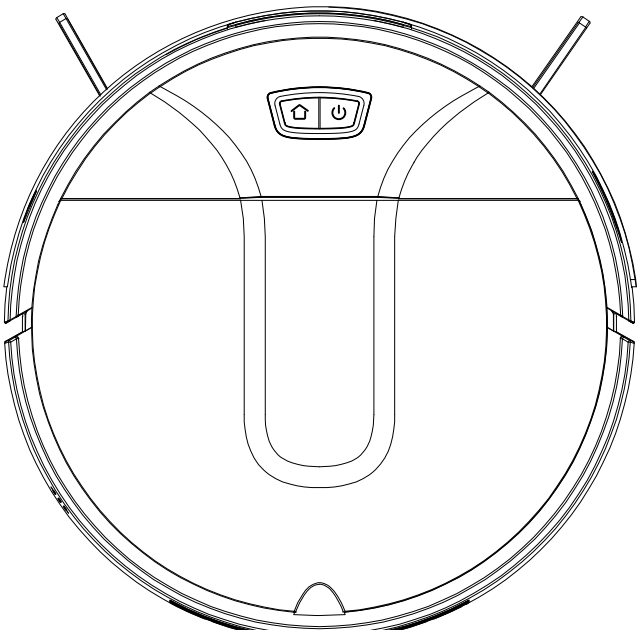

Let’s Enjoy A Smart Life

Email：us-customer.ts@robotvac.cn
Email：ca-customer.ts@robotvac.cn

Operating and Programming

Please clean all the obstacles and cable before turning on the machine, and remove all the unstable, fragile, and dangerous items. Avoiding the machine is twine or stuck or dragged causing personal or property damage.

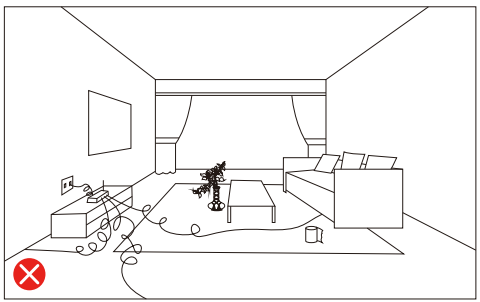

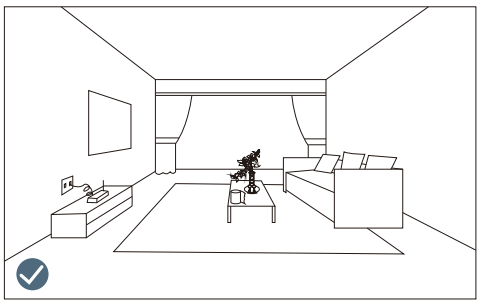

If using the machine in a suspended environment, please be sure to use fixed physical barriers to prevent personal or property damage caused by the machine falling.

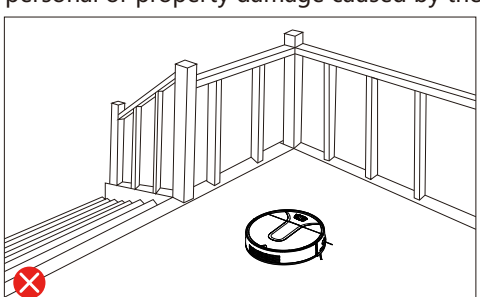

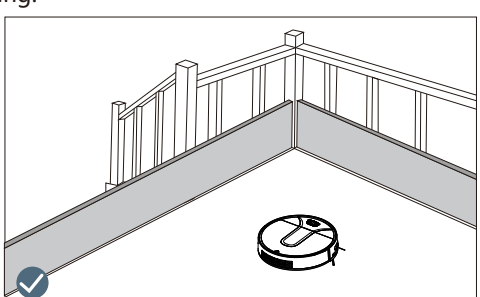

Note: During the first cleaning process, please follow the robot vacuum for the entire process to assist in handling some possible small problems. After handling, the robot vacuum can smoothly do autonomous cleaning in future cleaning.

If you encounter any problems, such as a machine stuck or charging failure, you can

contact us: us-customer.ts@robotvac.cn ca-customer.ts@robotvac.cn

Safety Introduction

Before using this product, please read the following safety instructions and follow all standard safety precautions.
Please read this instructions manual carefully and keep it properly.
Any operation that does not comply with this instructions manual may result in damage to the product.

Notice:

1.Only authorized technicians are allowed to disassemble the product, and users are not recommended to disassemble it themselves.
2.The product only applies the original power adapter provided by the manufacturer; otherwise, it may cause damage to the product.
3.Do not touch the power cord, socket or power adapter with wet hands.
4.Please do not allow curtains or any part of your body to get caught in the product's driving wheels during use.
5.Please keep the product away from cigarettes, lighters, and other open flames.
6.Please clean the product after charging is complete.
7.Please do not bend the wire, or put weight or sharps on the machine.
8.The product is for indoor use instead of outdoor.
9.Please do not sit on the product.
10.Do not use the product in damp environments, such as bathrooms.
11.Before using the product, please remove all vulnerable and fragile items on the floor, such as glass cups and lamps, etc as well as any objects that may entangle the side brush or block the fan port, such as electrical wires, paper scraps, and curtains.
12.Please do not put the product on the place where it tends to fall, for example, on the table or chair.
13.Please carefully check if the power adapter is properly connected to the socket before use, otherwise it may causedamage to the battery.
14.Please notify other members in the house before using the product to prevent tripping.
15.Please empty the dust box before using the product.
16.The product is designed to operate at a temperature of 0 to 40 ℃.
17.Please do not use the product in high-temperature environments.
18.Please remove the battery from the machine before discarding the product.
19.Please make sure that the product is not connected to a power supply when removing the batteries.
20.Please recycle the used batteries safely.

⚠ Warning:

1.Only use the manufacturer's original rechargeable battery and docking station. It is strictly prohibited to use non-rechargeable batteries. Please refer to the "Product Parameters" for battery specifications.
2.Do not use the product in an environment with open flames or fragile items.
3.Do not use the product in extremely hot (above 40°C) or cold (below 0°C) environments.
4.Do not allow human hair, clothing, fingers, or any other body parts to come close to the product's openings and operating parts.
5.Do not use the product on wet or flooded ground.
6.Do not allow the product to suck up any items that may clog the product, such as stones or waste paper.
7.Do not allow the product to suck up any flammable materials, such as gasoline, toner used in printers or copiers. Do not use the product in a cleaning area with flammable materials.
8.Do not allow the product to suck up any burning items, such as cigarettes, matches, ashes, or other items that may cause a fire.
9.Do not place anything at the suction port. Do not use the product when the suction port is blocked. Clean the dust, cotton, hair, etc. from the suction port to ensure smooth air flow.
10.Handle the power cord with care to avoid damage. Do not drag or pull the product or charging dock using the power cord. Do not use the power cord as a handle, clip the power cord in a door seam, or pull the power cord around sharp corners. Do not operate the product on the power cord and keep the power cord away from heat sources.
11.Do not use a damaged docking station.
12.Even if the product is severely damaged, it is prohibited to burn it, as the product battery may cause an explosion.
13.Users are not allowed to replace the lithium battery inside the machine at will. If a battery replacement is needed, please contact the after-sales department.
14.Only use the original manufacturer's power adapter GQ12-190060-VC and DBS012A-1900600C.

Table of Contents

1 Product Contents 01

2 Accessories Introduction 02

3 Preparation 04

3.1 Appliance Charging.....05
3.2 Pause, Wake up and Power off.....07
3.3 Start Cleaning.....08

4 Equipment Installation 10

4.1 Dust Box.....10
4.2 Charging Contacts, Anti-drop Sensors, Driving Wheels and Universal Wheel.....12

5 Light Display 13

6 Troubleshooting 14

7 Product Parameters 15

1.Product Contents

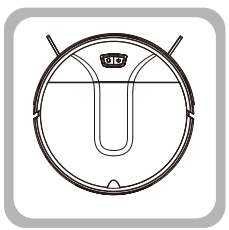

1 x Appliance

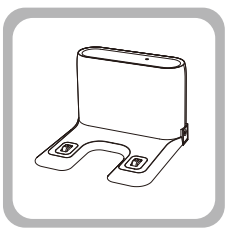

1 x Docking station

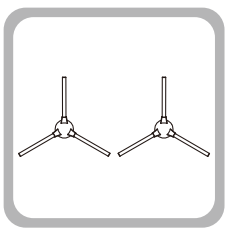

2 x Side brush

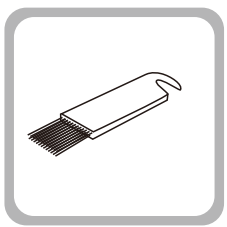

1 x Cleaning brush

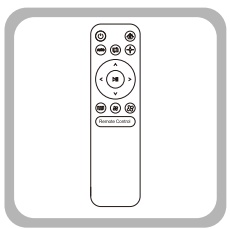

1 x Remote control
(without battery)

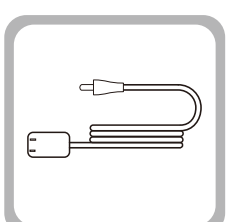

1 x Power adapter

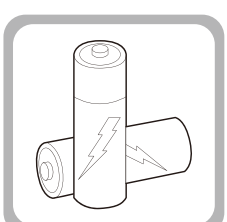

2 x AAA Batteries

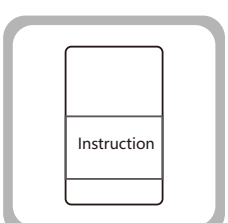

1 x Instructions manual

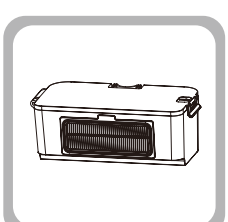

1 x Dust box
(In the machine)

2.Accessories Introduction

Front View

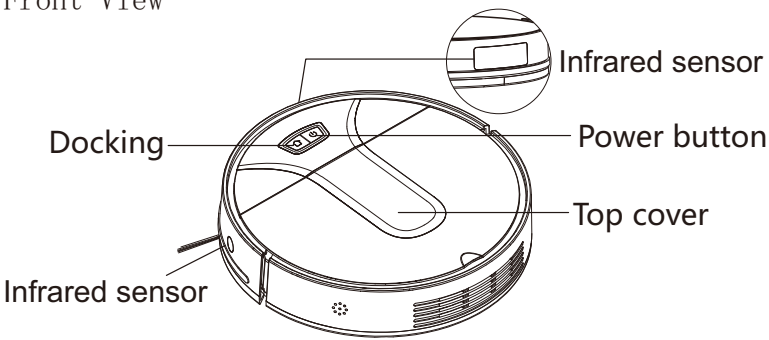

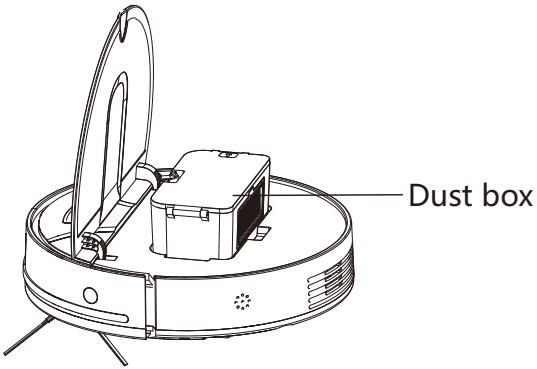

Bottom View

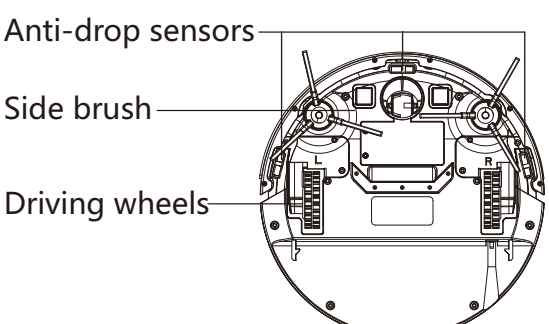

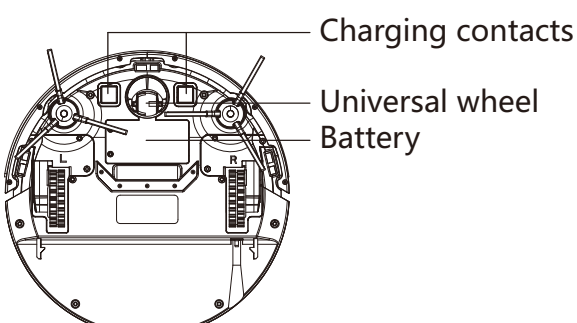

Dust Box

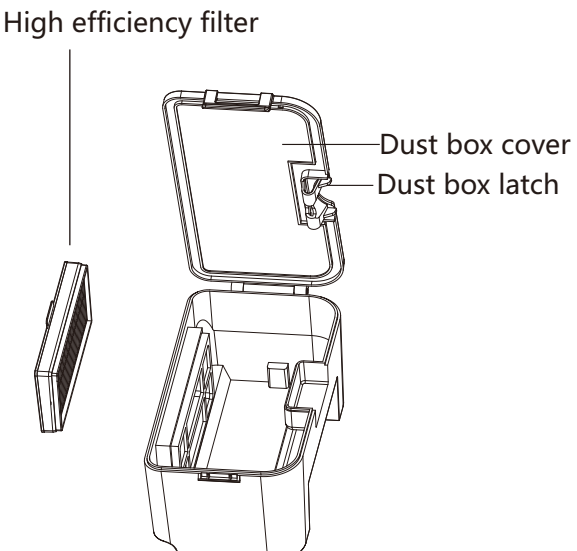

Docking Station

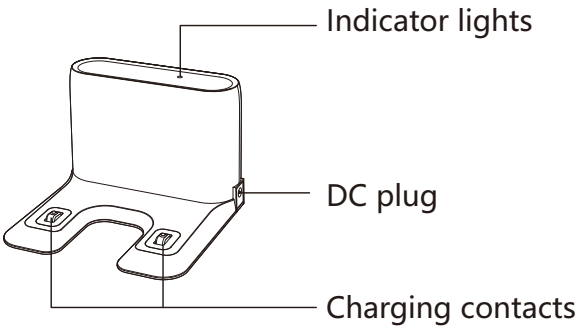

Remote Control

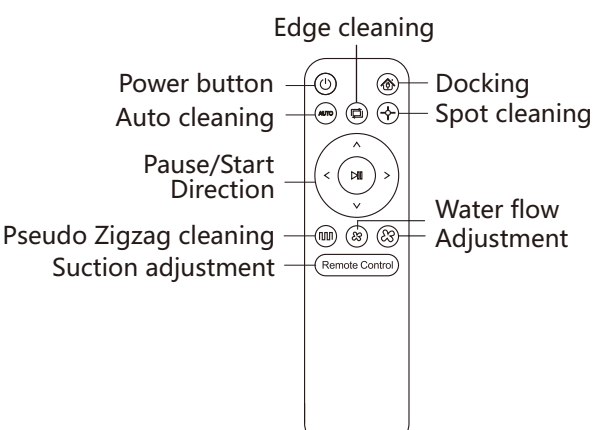

3.Preparation

Before operating the device, please take out the protection of the rubber on both sides of the machine, and then long press the power on to test.

1. Remove the protective strip

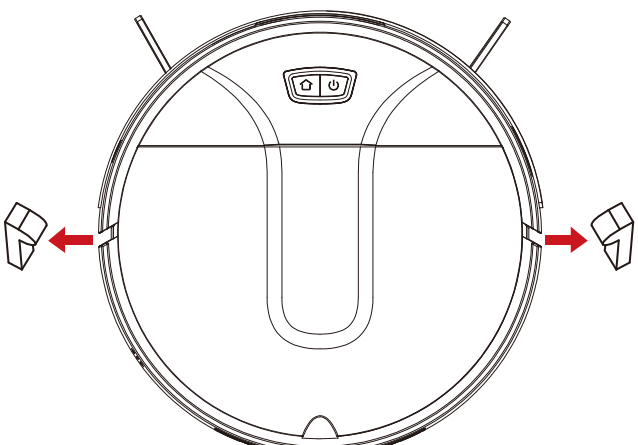

2. Connect to APP on startup

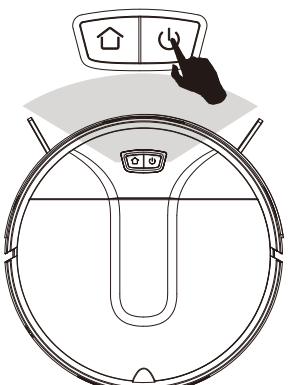

Step-1

Press the power button for 3~5s

Step-2

Long press the reset button for 3~5s, the indicator blinks, connect to the APP

3.1 Appliance Charging

1. Plug in the Charging Dock and place the remaining wire into the trunking at the bottom of the Charging Dock.

Note: Failure to place the remaining wire.into the trunking, may cause Robot tobecome stuck while charging or cleaning.

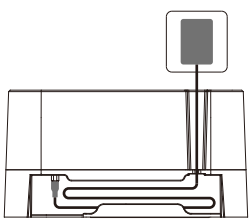

2. Place the Charging Dock on a hard level surface and against a wall.

3. Connect the adapter and place the charging base.

Note: Ensure that there is more than 0.5 meters of space on both sides of the charging base and 1.5 meters of space in front of it.

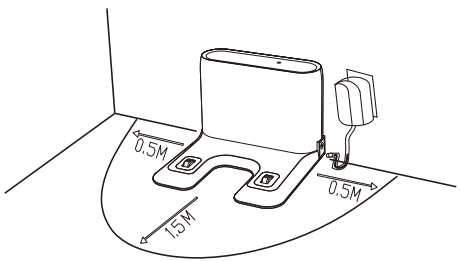

❗ Charging Precautions:

1.The docking station should not be used in environments with direct sunlight or strong reflective surfaces such as mirrors nearby. If there are highly reflective objects, please cover them from the bottom up to 7cm.
2.To ensure the normal working time of the appliance, please fully charge it before use.The charging time is approximately 45 hours.
3.Do not charge the water tank assembly during charging to ensure safety and prevent damage to the floor from damp mop.

4. **Install side brush:** Install side brush according to the diagram.

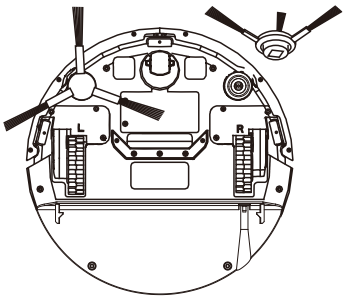

5. Turn on the machine and then charging.
Press the turn on button for few seconds, when the reminder light turns on, the machine will go back to the charging base.

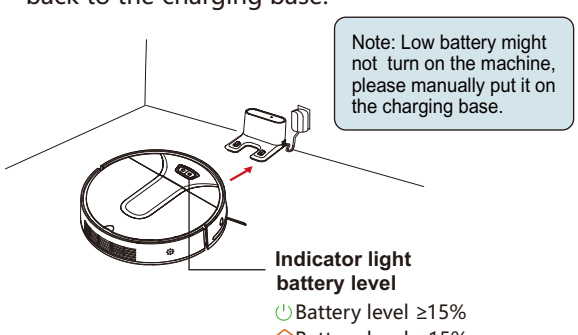

6. **Charging:** Place the appliance on the docking station to charge (During charging, the indicator lights will flash. When charging is complete, the lights will stay on continuously. The charging time is approximately 4.5 hours).

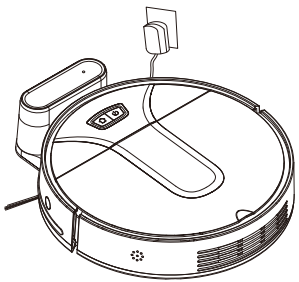

During the cleaning process, the appliance can sense low battery and automatically return to the docking station for recharging. You can also command the appliance to return to the docking station by pressing the return-to-charging button ⌂ on the remote control.

3.2 Pause, Wake up and Power off

1. Pause:

During operation, press the button on the appliance shortly, or the pause button on the remote control to pause the operation.

2. Wake-up:

If the appliance is paused for more than ten minutes, it will automatically enter sleep mode (all indicator lights on appliance are off).To wake up the appliance, press any button on the appliance or the power button on the remote control firstly, and then start the operation.To restart the operation, press the start button on the appliance or the corresponding button on the remote control.

3. Power off:

After the appliance stops working, press and hold the power button until the appliance indicator lights are off, indicating that the machine has been turned off.

*After the operation is finished, it is recommended not to turn off the appliance, but to keep it charging so that it can perform better in the next operation.

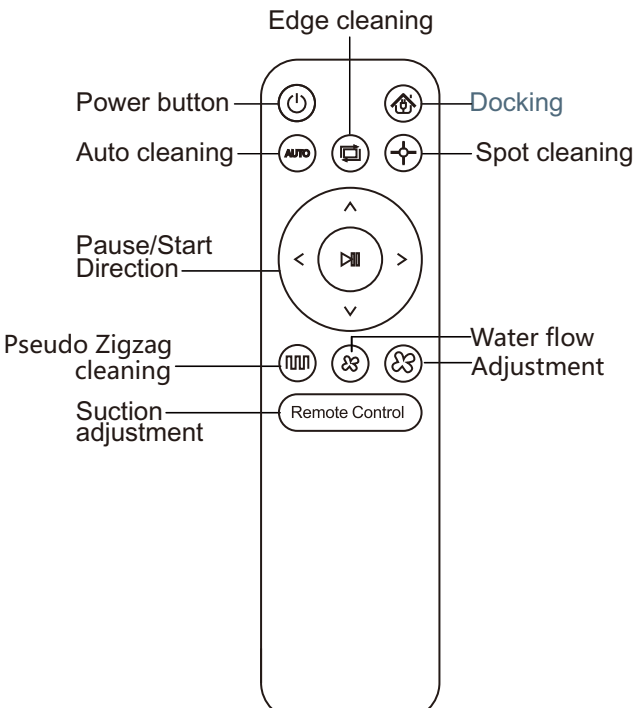

3.3 Start Cleaning

1. Auto Cleaning

Robot vacuum performs random cleaning for 90min and automatically returns to recharge once the cleaning is complete.

In the power-off state, press and hold the power button until the appliance indicator lights is on to indicate that the appliance is turned on. Then, press the power button briefly to start the auto cleaning mode.

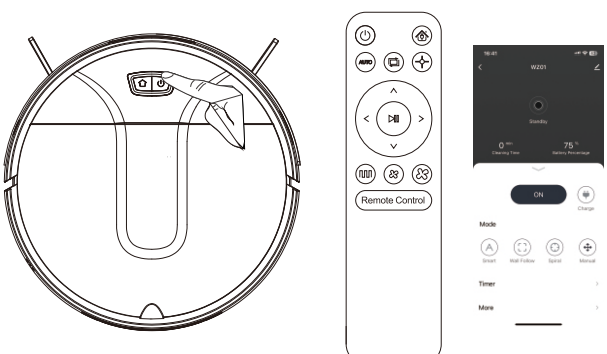

> Note:
> For different cleaning needs, this product is equipped with multiple cleaning modes to choose from. You can start various cleaning modes through the appliance or remote control.

2. Spot Cleaning

Applicable scenario: Suitable for environments where garbage is concentrated on the ground. The appliance cleans in a spiral path in the designated area and returns to the starting point after cleaning is complete.

The robot vacuum performs an outer spiral cleaning in a clockwise direction by default until it reaches a maximum radius of 0.6 meters, then performs an inner spiral cleaning and ends at the starting position.

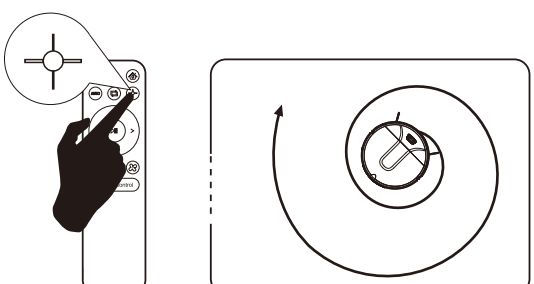

3. Edge Cleaning

Applicable scenario: Suitable for cleaning corners and edges of indoor spaces, the appliance cleans along the periphery of fixed objects (such as walls) and returns to the docking station after edge cleaning is done.

Setup method:
Press buttonEon the remote control to start edge cleaning.

The robot vacuum performs edge cleaning while keeping a distanceof less than 2cm from the wall.

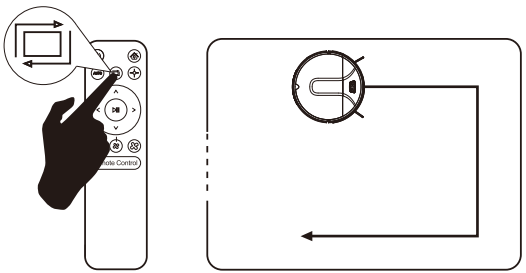

4. Pseudo Zigzag Cleaning

The robot vacuum performs zigzag cleaning mode, with a maximum straight-line cleaning distance of 5 meters.

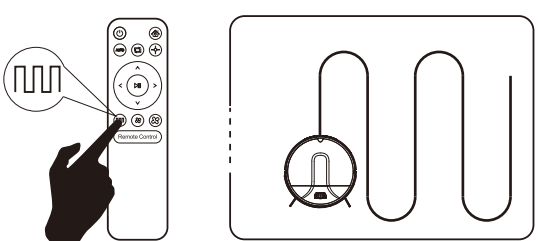

5. Manual Control

Applicable scenario: Suitable for manual control cleaning.

Setup method: Press the corresponding buttons on the remote control to control the appliance's movement and turning.

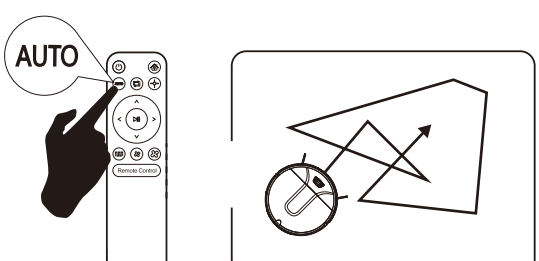

4.Equipment Installation

4.1 Dust Box

a. Press the dust box latch to remove the dust box;

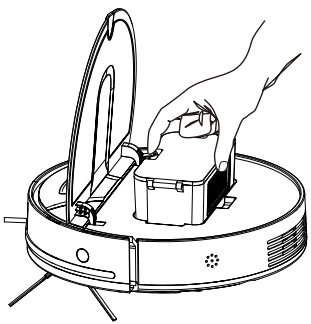

b. Open the side cover of the dust box;

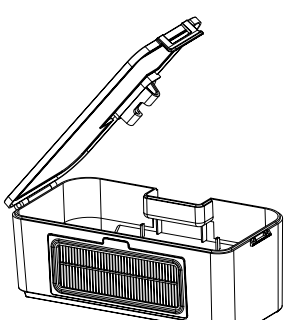

c. Pour out the trash;

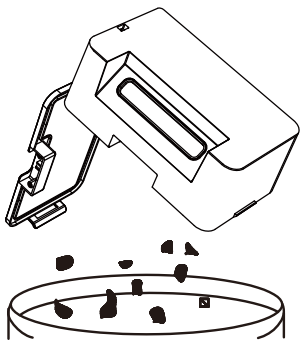

d. Remove the high efficiency filter;

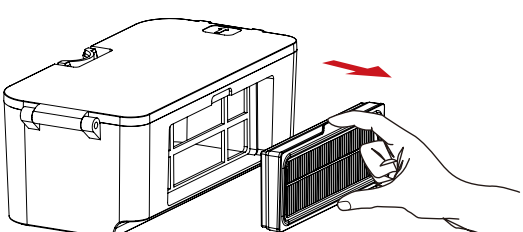

e. Open the high efficiency filter and lightly tap it to remove dust;

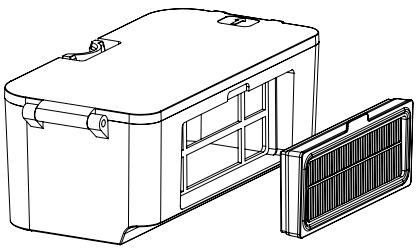

f. Clean the dust box thoroughly with a cloth;

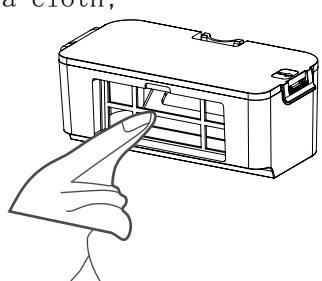

g. Air dry the dust box and filter components and keep them dry to ensure their service life;

Note:
- It is recommended to clean the filter once every 15-30days of use. The maximum service life of the high efficiency filter is 3 months.
- Do not expose the high efficiency filter to sunlight directly.
- To purchase accessories, please contact
  Email: us-customer.ts@robotvac.cn ca-customer.ts@robotvac.cn

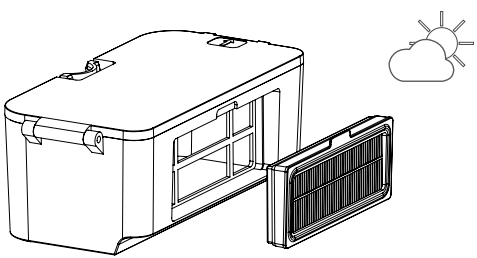

h. Put the filter back into the dust box;

Note:
Please make sure the high efficiency filter is dry before installing it.

i. Cover the dustbin with its cover and install it onto the appliance.

4.2 Charging Contacts, Anti-drop Sensors, Driving Wheels and Universal Wheel

Kindly Reminder:
The charging contacts, anti-drop sensors, and inside of the bumper all contain sensitive electronic components. Please use a dry cloth for cleaning and avoid using a wet cloth to prevent water damage.

1.Clean the charging contacts.

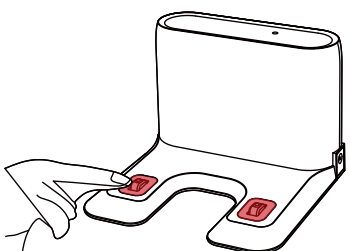

2. Clean the anti-drop sensors.

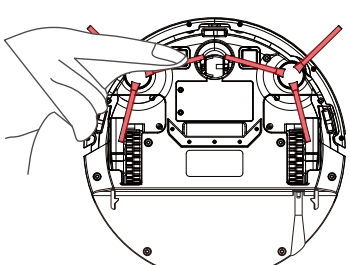

3. Clean the driving wheels and universal wheel.

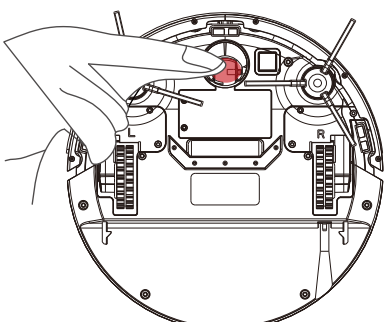

Note:

- If you do not use this product for a long time, please fully charge it before storage, turn off the power button, and make sure to recharge it every 3 months to prevent over-discharge of the battery.
- If the battery is over-discharged or the product is not used for a long time, it may not be able to charge. Please contact the after-sales service of our company for repair and do not disassemble it by yourself.

Contact Email: us-customer.ts@robotvac.cn ca-customer.ts@robotvac.cn

5.Light Display

No.	Content	Light Definition			
		Power		Docking	
		Color	Status	Three-color	Status
1	Power on	Green	Constant		off
2	Power off		off		off
3	Cleaning	Green	Constant		off
4	Docking	Green	Constant	Yellow	Constant
5	Low battery docking	Green	Constant	Yellow	Constant
6	Charging	Green	Constant	Yellow	Breathing
7	Charge Complete	Green	Constant	Green	Constant
8	Bluetooth pairing	Green	Flashing	Green	Flashing
9	Bluetooth connected	Green	Constant		off
10	Abnormal alarm	Red	Flashing		off
11	Standby	Green	Constant		off
12	Sleep		off		off
13	Low battery		off	Yellow	Flashing

Specifications for two lights display, from top to bottom sequentially for power, docking. lamp red/green and the lights are yellow, red and green including off, constant light, fast flashing (2Hz), breathing four conditions.

6.Troubleshooting

Serial number	Fault content	Fault tone		Fault handling method
		Bass(beep)	Treble(beep)	
1	Bumper abnormal	0	1	Please check whether the bumper can rebound normally?
2	Anti-drop Sensors abnormal	0	2	Please clean the anti-drop Sensor or change the location and start again!
3	Abnormal charging/ poor battery life	5	3	Please make sure to use the original adapter to charge and try to recharge the machine for 5 hours!(Keep the charging contact normal)
4	Battery is low	6	1	Please put the machine back on the charging pile to charge!
5	Robot vacuum was stucked	7	2	Please use the machine in an open place!
6	Side brush was stucked	5	1	Please check whether there is any foreign matter entangled in the side brush and clean the foreign matter before starting!
7	The wheels was stucked	3	2	Please check whether there is any foreign matter entangled in the wheel and clean the foreign matter before starting!
8	Fan abnormal	2	3	Please check if the fan port is blocked or the dust box is full!
9	Encoder abnormal	2	4	Please try to restart the machine!

Our Robot Vacuum have a one-year warranty. If you have any questions, please contact us.

Email: us-customer.ts@robotvac.cn

Email: ca-customer.ts@robotvac.cn

7.Product Parameters

Classification	Item	Parameter
Structure	Diameter	Φ300mm
	Height	78mm
	Net weight	2.24kg
Battery	Voltage	14.4V
	Battery	Rechargeable Li-ion battery pack 2550mAh
Cleaning Parameter	Capacity of duCst box and water tank	Dust box capacity 480ml
	Charging type	Automatic charging/Manual charging
	Cleaning modes	Auto/Spot/Edge/Pseudo Zigzag
	Charging time	Approximately 270 minutes
	Cleaning time	Approximately 90 minutes
Appliance	Rated Power（W）	35W
	Operating Voltage（V）	14.4V

* Due to the continuous improvement of the product, the physical product shall prevail in this material, and our company reserves the right to update the product.

Plumbum (Pb) and its compounds	Hazardous Substance					
	Plumbum (Pb) and its compounds	Plumbum (Pb) and its compounds	Plumbum (Pb) and its compounds	Plumbum (Pb) and its compounds	Plumbum (Pb) and its compounds	Plumbum (Pb) and its compounds
Plastic parts	○	○	○	○	○	○
Hardware parts	○	○	○	○	○	○
Electrical circuit module	X	○	○	○	○	○
Electronic components	○	○	○	○	○	○
Battery	○	○	○	○	○	○
Plug power cord (metal part)	○	○	○	○	○	○

○: It indicates that the content of the hazardous substance in all homogeneous materials of the component is below the limit requirements specified in the current valid version of GB/T 26572.

×: It indicates that the hazardous substance exceeds the limit requirement specified in the current effective version of GB/T 26572 for at least one homogeneous material in the component, and there is no mature alternative solution in the industry, complying with the environmental requirements of the EU RoHS directive.

10 Standard compliance: GB4706.1-2005 GB4706.7-2014
GB4343.1-2018 GB17625.1-2012

FCC Statement

This device complies with part 15 of the FCC Rules. Operation is subject to the following two conditions:

(1) This device may not cause harmful interference, and

(2) this device must accept any interference received, including interference that may cause undesired operation.

This equipment has been tested and found to comply with the limits for a Class B digital device, pursuant to part 15 of the FCC Rules. These limits are designed to provide reasonable protection against harmful interference in a residential installation. This equipment generates, uses and can radiate radio frequency energy and, if not installed and used in accordance with the instructions, may cause harmful interference to radio communications. However, there is no guarantee that interference will not occur in a particular installation. If this equipment does cause harmful interference to radio or television reception, which can be determined by turning the equipment off and on, the user is encouraged to try to correct the interference by one or more of the following measures:

- Reorient or relocate the receiving antenna.
- Increase the separation between the equipment and receiver.
- Connect the equipment into an outlet on a circuit different from that to which the receiver is connected.
- Consult the dealer or an experienced radio/TV technician for help.

FCC Caution: Any changes or modifications not expressly approved by the party responsible for compliance could void the user's authority to operate the equipment. This transmitter must not be co-located or operating in conjunction with any other antenna or transmitter.

RF Exposure

This device complies with FCC radiation exposure limits set forth for an uncontrolled environment. This equipment should be installed and operated with minimum distance 20cm between the radiator & your body.