USER MANUAL

Please read this instruction manual carefully before using the product and keep it in a safe place

Intelligent Robot Cleaner

Thank you for choosing

Thank you for choosing this smart robot vacuum cleaner.

It is a smart path-planning integrated sweeping and moppping robot with a high-precision laser ranging sensor, which can build a room map in real time, plan sweeping and mopping paths, and completefull-coverage, regular, and efficient cleaning work. In terms of cleaning, a deep cleaning method of sweeping first and then mopping is adopted. It has 2000Pa super powerful vacuuming, a plant-inspired wet mop system for decontamination, and a variety of sensors and super obstacle surmounting capabilities to adapt to complex home environments. It will automatically recharge after cleaning is completed, no human intervention is required throughout the process. You can also view the cleaning map and running status of the robot in real time through the "Smart Life" APP, and customize the cleaning area and cleaning time for remote control at any time.

Smart technology makes life more free. From now on, put down trivial housework and enjoy life to the fullest.

Happy using!

Product description The cleaner

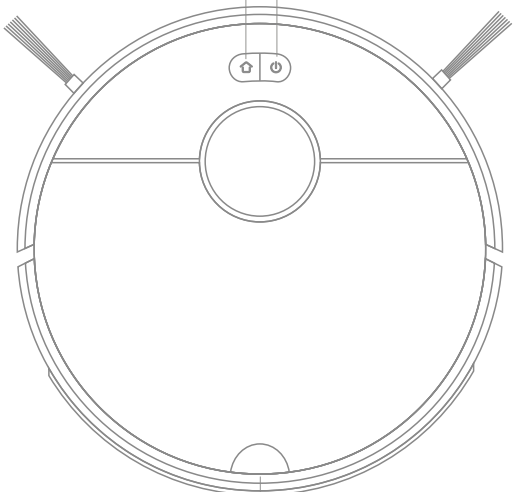

Recharge button:

- Short press to start recharge
- Press and hold for 3 seconds to reset Wi-Fi.

Start key:

- Short press to start cleaning
- Press and hold for 3 seconds to turn on or off.
- Note:
  Press any key to pause during cleaning or recharging.

Indicator light:

- Network distribution: both icons flash green at the same time
- Recharging: The yellow light of the power-on icon is always on
- Charging: The recharging icon yellow light breathes
- Alarm: The red light of the power-on icon flashes

Lift cover

Product description

Parts List

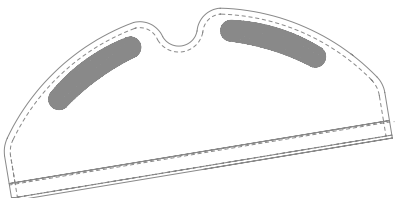

Mop

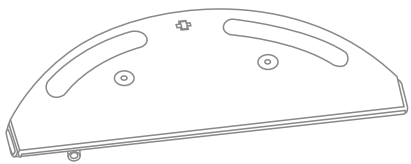

water tank

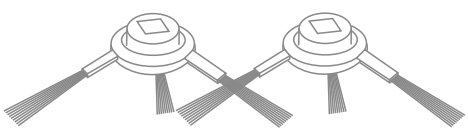

Side brush

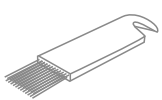

hair cleaning kit

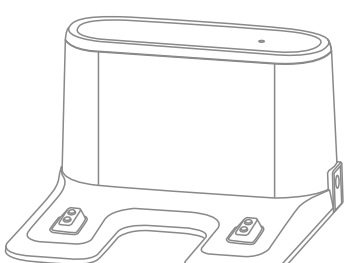

Charging stand

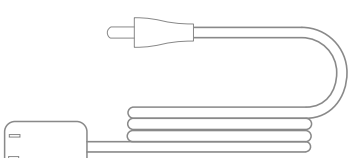

Power cable

Product description Dust box and the cleaner

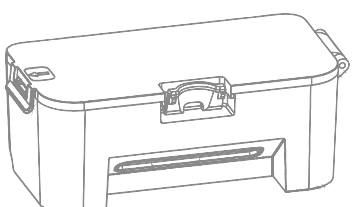

Dust box

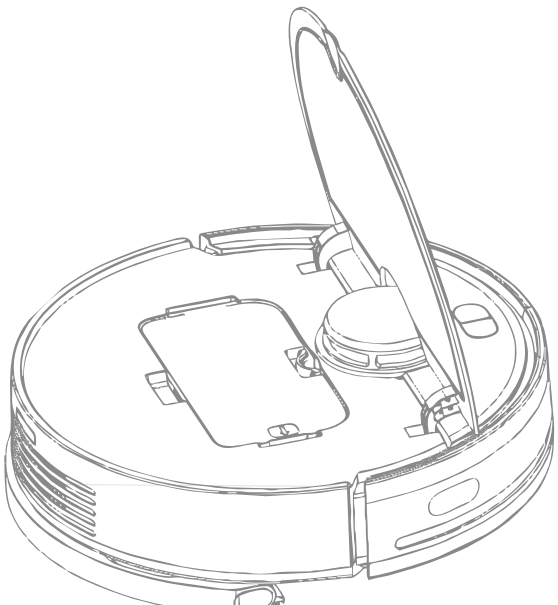

The cleaner

Product description

Cleaner and sensor

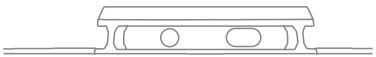

Laser sensor

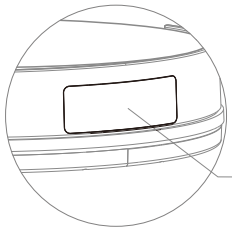

Infrared sensor

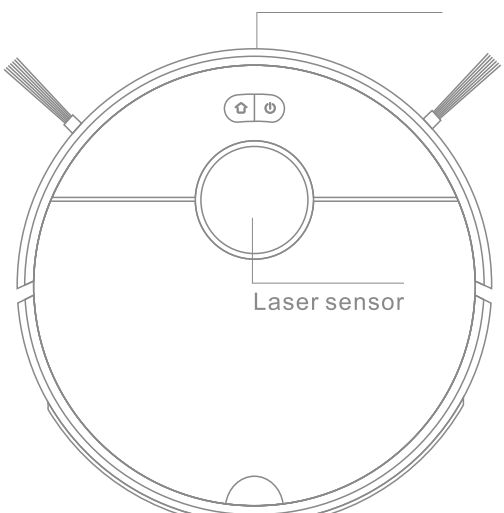

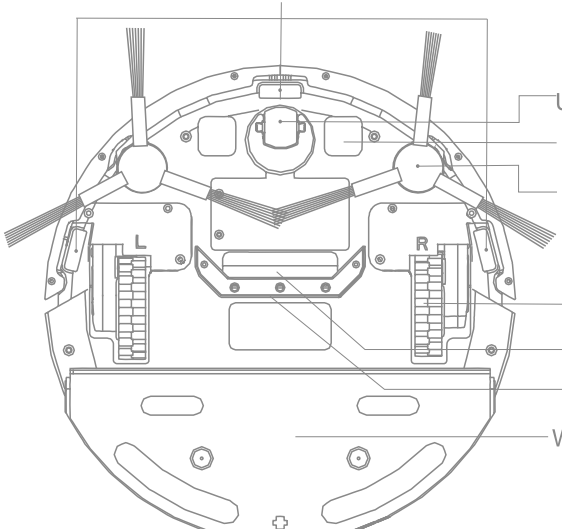

Product description Mopping components and recharging base

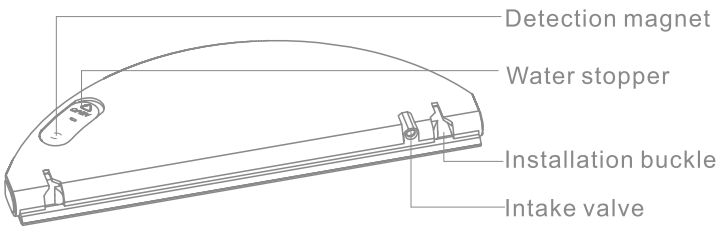

(Mopping component - front)

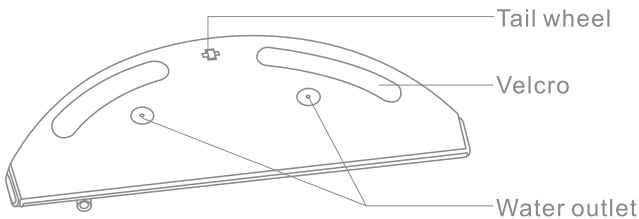

(Mopping Components - Back)

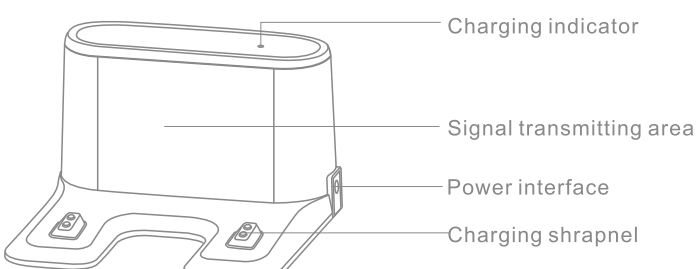

(charge base)

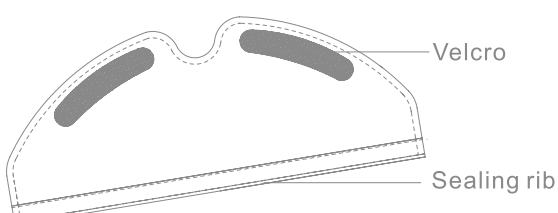

(Mopping components - mopping cloth)

Install Cleaner and charging

1. Insert the DC plug of the power cord into the charging base connector.

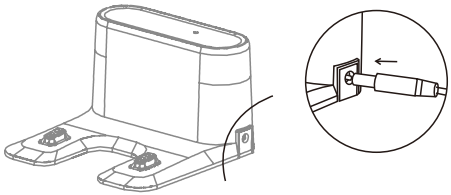

2. Place the charging stand against the wall onthe level ground, plug the power cord into a household power plug, and the green charging indicator light will turn on.

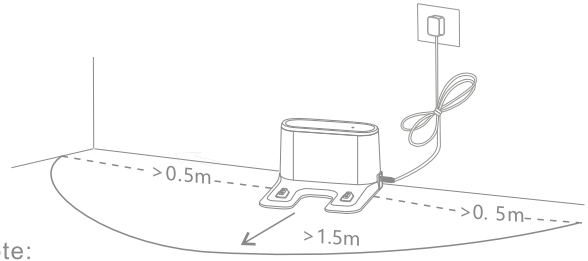

Note:

- Make sure that there is more than 0.5 meters on both sides of the charging stand and more than 1.5 meters in front.
- The power cord hanging on the ground may be dragged by the cleaner, causing the charging stand to shift or power off.

3. Turn on to charge.

- Press and hold the power button"⏻"
- Press the charge button"⌂" to power on". The cleaner will start to search for the charging base and charge.

Note:

- The cleaner cannot be turned on due to insufficient power. Place the cleaner on the charging stand and connect the power to the charging stand. It will charge and automatically turn on

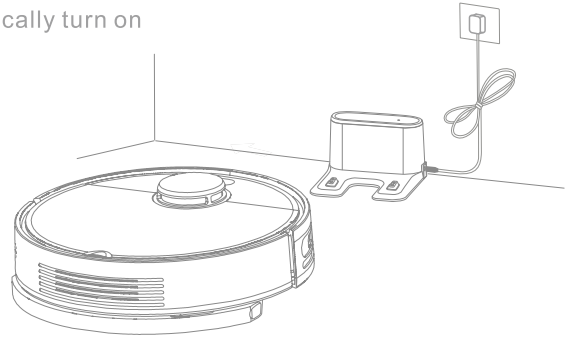

- Charging status:
  Charging button"⌂" yellow light shows on and off status.
- Charging completed:
  Charging button "⌂"The green light is always on.

Install Water tank and moping cloth

Water tank and moping cloth:

1. Wet the mop and wring it dry until it does not drip. Insert the round rubber bone of the mop along the slot of the water tank to the bottom so that the Velcro is aligned and pasted smoothly.

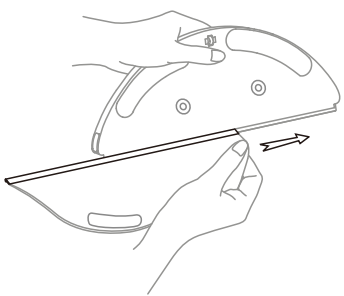

2. Water tank filled with water

Open the water tank cover, fill it with tap water and plug it back into the water tank cover

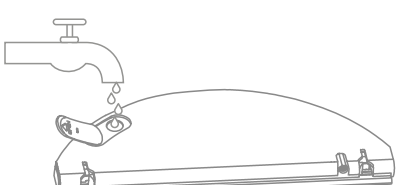

3. Install the water tank: Push it in parallel with the tail of the cleaner and the same width as the machine. When you hear a "click" sound, it means the installation is in place.

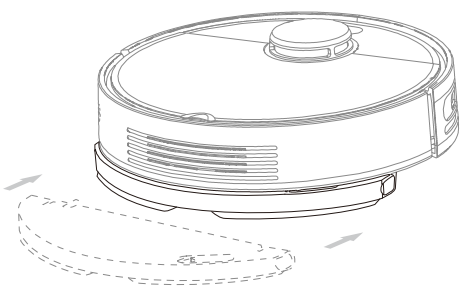

Note:

- Do not use the water tank assembly when no one is at home
- If there is a carpet, please use a virtual wall to block it
- Some floor cleaners or disinfectants can cause the water tank filter to become clogged, so please use with caution

Install Start cleaning

1.Start cleaning

When the cleaner power-on indicator light stays on, it means charging is complete. Short press the button or use the mobile client to start cleaning.

Note:

- Do not use the mopping kit when no one is at home
- It is recommended to clean the mop every 30 minutes to ensure the cleaning effect

2.Remove water tank

When the cleaner completes its work and returns to the charging base, use both hands to press the buckles on both sides inward and drag backwards to remove the water tank.

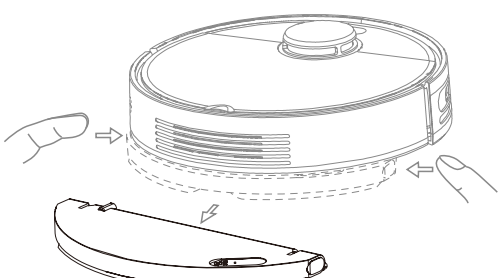

Note:

Please remove the water tank assembly when charging or not in use, pour out the remaining water in the water tank and clean the mop to avoid mold, odor or wooden floors being soaked in water.

Instructions for use

- Power on/off

Press and hold to power on, the ring indicator light ⏻ will light up, and the cleaner will enter standby. When the cleaner is at rest, press and hold the button ⏻ to turn off the machine. After the machine is shut down, the cleaning will end.

- Note: The cleaner cannot be shut down while charging

- Cleaning: Short key ⏻ to start cleaning (see the picture on the right for the cleaning method)

Press any key to pause during cleaning

- Note:

If the power is too low, it will not be able to start cleaning. Please charge first and then start cleaning. When the power is insufficient during the cleaning process, the cleaner will automatically return to the charging stand for charging. When the power is sufficient, it will automatically return to the stopped place to continue cleaning.Please arrange all kinds of wires on the ground (including the power cord of the charging stand) before cleaning, so as to avoid entangled with each other during cleaning, which will cause electrical power failure, damage items or wires.

If the cleaning time is less than 15㎡, it will be cleaned twice by default.

- Charging

Automatic mode: After cleaning, the cleaner will automati cally return to the charging stand for charging

Manual mode: In the pause mode, short press ⌂ to start recharging

When the cleaner is charging, the charging icon ⌂ yellow light flashes

- Note:

If the cleaner does not find the charging stand, it will automatically return to the starting point, please manually put the cleaner back to the charging stand for charging

Instructions for use

Cleaning method

After starting up, the cleaner will scan to generate a map. the cleaning path will be planned by cleaning along the wall first, and then mapping in a "Z" path, and the cleaning of each partition will be completed one by one. The cleaner will automatically return to the charging base for charging.

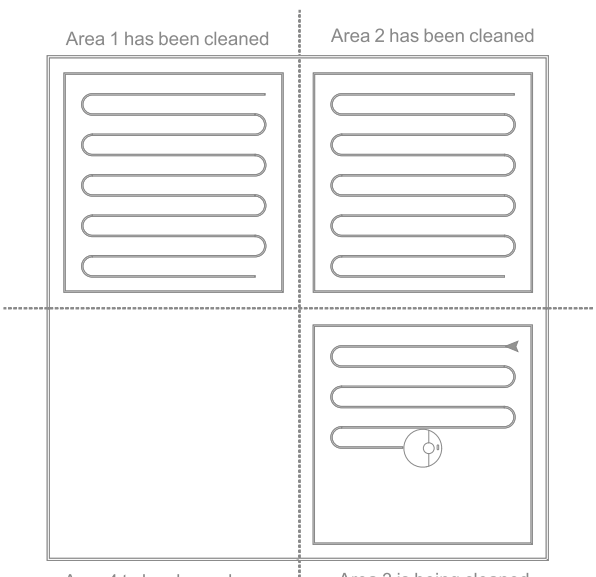

- **Cleaning mode:**
  By App, user can choose between quiet, standard and powerful modes. The default mode is standard mode.

- **Do Not Disturb mode:**
  During the Non-disturb period, the cleaner will not automatically resume scanning and perform scheduled cleaning. The Non-Disturb mode is turned off by default at the factory. You can use the APP to turn it on and set the Non-Disturb period.

- **Area cleaning:**
  Use the mobile APP to set up the area cleaning function,and the cleaner will clean according to the area planned on the mobile phone.

- **Sleep:**
  If there is no operation for more than 10 minutes, the cleaner will automatically enter the sleep state. In the sleep state, the cleaner light is off. Press any key in the sleep state to wake up the cleaner.

- **Note:**
  The cleaner will not enter sleep mode when charging on the charging stand and will automatically shut down if the sleep time exceeds 12 hours.

Instructions for use

•Pause

When the cleaner is running, press any key to pause, press the power button to continue cleaning,press the charge button to return to the charging stand to end this cleaning

Note:

When the cleaner is charged against the charging stand during the pause, the cleaning will end

•Add water to the water tank or clean the mop midway:

If the cleaner needs to add water or clean the mop during the cleaning process, please press any key to pause and then remove the water tank. After adding water or cleaning the mop, put it back into the water tank and press the power button to continue working

•Fault status:

When an abnormality occurs during the operationof the cleaner, the ⏻ light flashes red quickly and a voice prompts for solutions. Please refer to "Troubleshooting"

Note: · If there is no operation for 10 minutes in the fault state, the cleaner will automatically sleep. · If the cleaner is charged on the charging base in the fault state, this cleaning will end.

•Go wherever you point:

Use the mobile APP to specify a target point on the map, and the cleaner will automatically plan a route to the designated location.

• Charging stand:

place the charging stand against the wall on a level ground, ensure that there is more than 0.5 meters of space on both sides of the charging stand, and more than 1.5 meters of space in front of the charging stand, and connect the plug to the power socket. For a better mobile client experience, please place the charging stand within Wi-Fi coverage

• Note:

Do not place the charging base in direct sunlight or cover the charging base with any object, otherwise the cleaner may not be able to automatically return to the charging base.

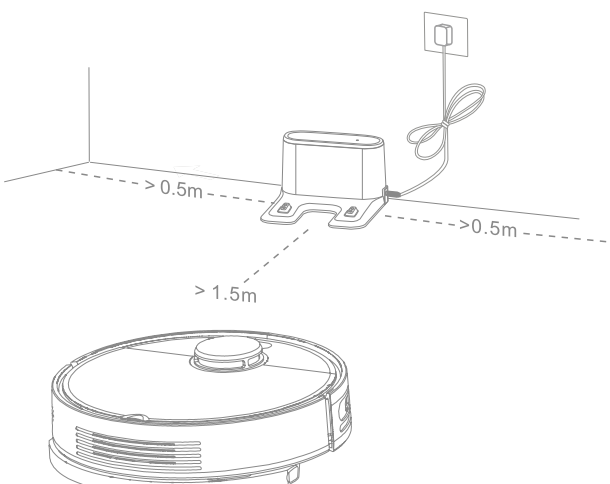

Instructions for use

•Side brushes: *recommended monthly cleaning

1. Turn over the cleaner and pull out the side brush.
2. Remove and use the hair cleaning tool to shave off the entangled objects.

•Note:

It is recommended to replace the side brush every 3-6 months to ensure the cleaning effect.

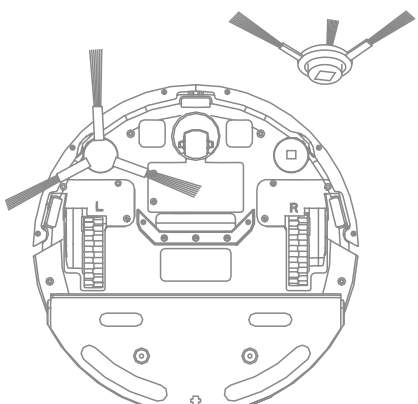

Charging stand

*It is recommended to clean the charging stand with a soft dry cloth every month

Daily maintenance

•The cleaner sensor

Wipe and clean the sensors of the cleaner with a soft dry cloth, including:

1. Three cliff sensors at the bottom of the cleaner
2. Sensors along the wall on the right side of the cleaner
3. Charging contacts at the bottom of the cleaner

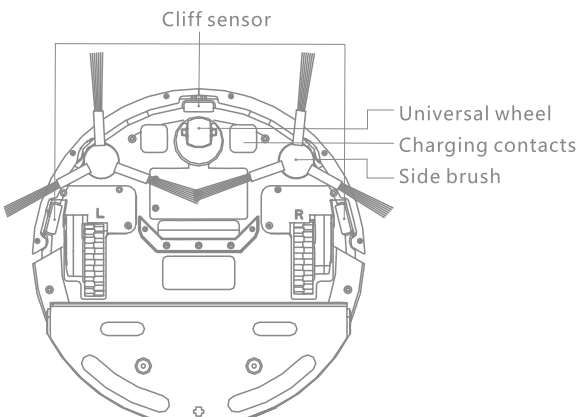

Software upgrade

The cleaner software can be upgraded by using the mobile phone . Before upgrading, please connect the charging stand and ensure that the power is greater than 20%.

The ⌂ ⏻ light flashes white quickly when the firm-ware is upgraded.

Daily maintenance

• Cleaning Tools and Cleaning Filters

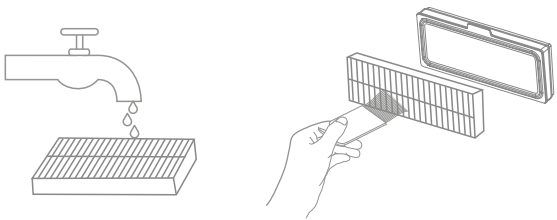

• Dust box and filter *recommended weekly cleaning

1. Open the upper cover of the cleaner, press the dust box buckle and lift up to take out the dust box.

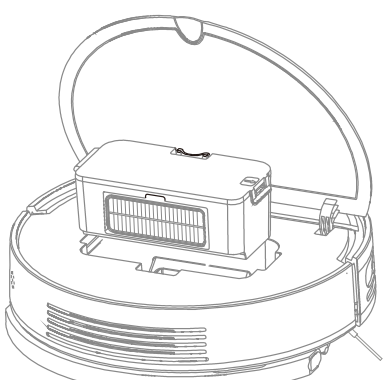

2. Open the dust box cover from the arrow position of the dust box and pour the garbage downwards

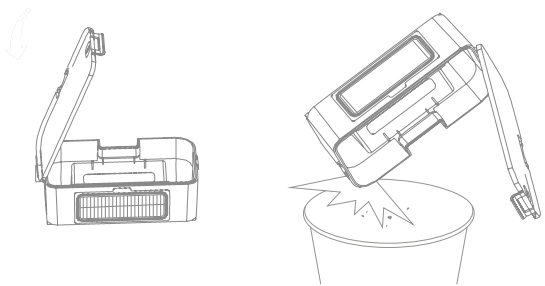

• Clean the washable filter

* Recommended cleaning every two weeks

1. Open the dust box cover from the arrow position of the dust box

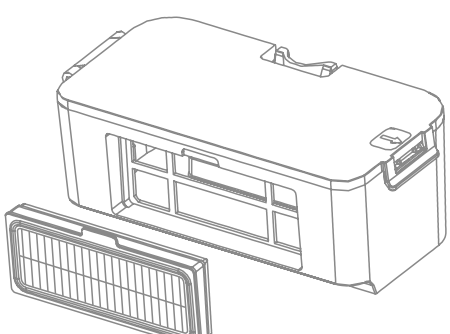

Daily maintenance

2. Pour clean water into the dust box and close the dust box lid. Shake the dust box left and right to pour out the dirty water. Repeat this step several times until the filter is clean.

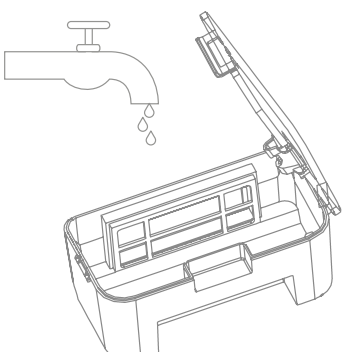

•Note:
Please wash with clean water and do not add any detergent.
Please do not use fingers to clean the filter.

3. Remove the filter, shake the water droplets vigorously, and dry the filter until it is completely dry before putting it back for use.

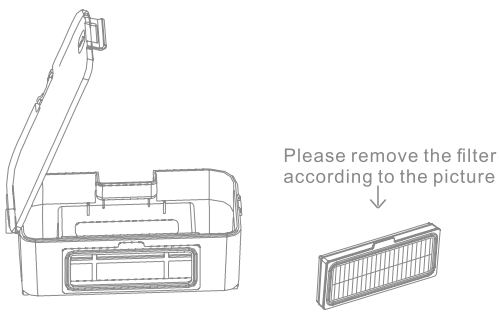

•Note:
Please be sure to dry it before use (at least 24 hours).
It is recommended to rotate the two filters.

Daily maintenance

•Battery:

The cleaner has a built-in high-performance carp ion rechargeable battery pack. To maintain battery performance, please keep the cleaner charged during daily use.

Note: If the clenar do not use it for a long time, please turn it off and store it. Charge it at least once every three months to avoid damage to the battery due to over-discharge.

•Mop *recommended for cleaning every time

1. Remove the mop from the mopping module.

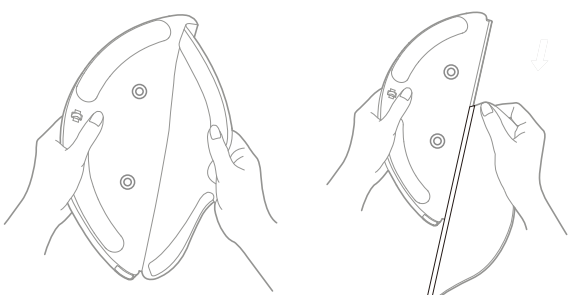

2. Clean the mop and dry it.

•Note:

Be sure to remove the mop for cleaning to avoid dirty water pouring back to block the filter element. If the mop is too dirty, it will affect the mopping effect. Please wash it before using it. It is recommended to replace the mop every 6-12 months to ensure the cleaning effect.

•Water tank drain hole

* recommended weekly cleaning

1. Pressurised rinse with tap water for 1 min.
2. Use the hair cleaning kit to repeatedly wash and brush until water flows normally.

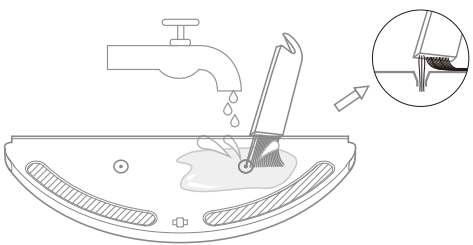

•Universal wheel: *Recommended to clean every month

1. Turn the machine over and pull out the universal wheel.
2. Clean the hair and dirt on the wheel body and axle.
3. Reinstall the wheel body and tighten it.

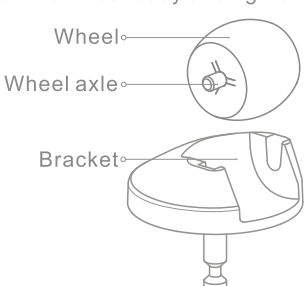

•Note:

It can be rinsed with tap water, dried and then reinstalled.

Basic parameters

• The Cleaner

Name	Parameter
Dimensions	300x300x92mm
Battery	14.4V/2550mAh lithium battery
Product Weight	≈2.24kg
Wireless Connection	AP+Bluetooth
Rated Voltage	14.4V
Rated Power	35W

•Charging stand

Name	Parameter
Dimensions	130x133x78.3mm
Rated power	11.4W
Rated input	100-240V
Rated output	19V⎓0.6A
Rated frequency	50/60Hz

The name and content of harmful substances in the product

Part Name	Hazardous Substance					
	(Pb)	(Hg)	(Cd)	(Cr(VI))	(PBB)	(PBDE)
Circuit Board	×	○	○	○	○	○
Metal Parts Case	×	○	○	○	○	○
Battery	○	○	○	○	○	○
Plastic Enclosure	○	○	○	○	○	○
Other Components	○	○	○	○	○	○

This form is prepared according to the provisions of SJ/T 11364.

○ Indicates that the content of the hazardous substance in all homogeneous materials of the part is below the limit requirements specified in GB/T 26572

× Indicates that the content of the hazardous substance in at least one homogeneous material of the component exceeds the limit requirements specified in GB/T 26572

Troubleshooting

When an abnormality occurs during the operation of the cleaner, the ⏻ light flashes red quickly and a voice prompt is issued. Please refer to the following table to solve the fault.

Faults	Solutions
Error 1: The laser head is blocked or stuck, please check.	The laser ranging sensor is blocked or stuck by other objects. Please remove the obstruction or other objects. If it cannot be cleared, please move the console to a new location and start it.
Error 2: The bumper is stuck, please check the robot bumper.	The crash buffer is stuck. Please tap it several times to remove foreign matter. If there are no foreign objects, please move to a new location and start.
Error 3: The right wheel is hanging in the air. Please move the robot to a new position and start cleaning again.	The wheels are hanging in the air, please move to another location to start.
Error 4: The ground detection sensor is abnormal, please check the ground detection sensor	The cleaner is hanging, please move to a new location to start. The cliff sensor may also be caused by being too dirty. Please wipe the cliff sensor clean.
Error 5: The side brush is entangled, please clean the robot side brush.	The side brush may be entangled with foreign matter, please disassemble the side brush and clean it.
Error 6: The wheels are entangled, please clean the robot wheels.	There may be foreign matter wrapped around the main wheel. Please clean it and restart it.
Error 7: The machine is trapped, please free the robot.	The cleaner may be stuck, please clear the obstacles around the cleaner.
Error 8: The battery is too low, please charge	The battery is low, please charge before use.
Error 9: Charging abnormality, please check	The battery temperature is too high or too low. Please wait until the battery temperature becomes normal before using it.
Error 10: The ground is uneven, please move the robot to a new location and start cleaning again	If it is detected that the cleaner is tilted during startup, please place the cleaner on a level ground and restart.

Common faults

Question type	Solution
Can not boot	The battery is low, please charge firstly and then use it again; The battery temperature is too low or too high, please use it in an environment of 0-40"C.
Can't charge	The charging base is not powered on. Please confirm whether both ends of the power cord of the charging base are connected. If the contact is poor, please clean the charging base shrapnel and the cleaner charging contactor. Please confirm whether the charging dock indicator light is on.
Charging rate is slow	When used in high or low temperature environments, the cleaner will automatically reduce the charging speed in order to extend the battery life; The charging contact area may be dirty, please clean the area with a dry cloth.
Unable to recharge	There are too many obstacles near the charging base, please place the charging base in an clean area; The cleaner is too far away from the charging base. Please try placing the cleaner near the charging base.
Abnormal behavior	Power off and then on again.
There is abnormal noise when cleaning	Some objects may be caught in the side brush or main wheel, please clean them after stopping the cleaner; When cleaning, the universal wheel gets dust or becomes entangled. It is recommended to use a screwdriver to remove and clean it.
Cleaning ability is reduced or dust is falling off	The dust box is full, please clean the dust box. The filter has been blocked, please clean the filter.
Can't connect to WiFi	Please clean the main brush.The WiFi function is not activated, please reset the WiFi and try again; The WiFi signal is not good, please make sure that the cleaner is in a coverage area with good WiFi signal; WiFi connection is abnormal, reset WiFi and download the latest APP and try to connect again; WiFi suddenly fails to connect. If you suspect that your home router has a setting error, you can contact customer service in time to help troubleshoot.

Common faults

Question type	Solution
Scheduled cleaning does not workls	The battery is insufficient and the remaining battery power is more than 20% before scheduled cleaning will be started.
It consuming power when the charging stand is used all the time?	The consumption of the cleaner when it is always on the charging dock is extremely low, which is helpful to keeping the battery at its best performance.
Does it need to be charged for 16 hours for the first three uses?	The lithium battery can be charged at any time without memory effect, and it can be used immediately after being fully charged without waiting for 16 hours.
The mopping module does not produce water or the amount of water produced is small.	Please check whether there is water in the water tank; please use the mobile APP to adjust the water volume to the maximum volume; Please follow the instruction manual to correctly install the mop and mop holder.
The battery ran low during cleaning and was recharged but scanning was not resumed.	Please confirm that the cleaner is not in Non-Disturb mode, as scanning will not continue under this mode; Scanning will not resume after manual recharging or placing the cleaner back into the charging base.
Unable to return to charging base after partial cleaning or moving location	The robot will regenerate the map after partial cleaning or long-distance movement; If the charging base is too far from cleaner , automatic recharging may not be possible. Please manually put the cleaner back into the charging base for charging.
The cleaner suddenly missed sweeping	If it is suspected that the wall sensor or cliff sensor is dirty, it is recommended to clean with a soft dry cloth.

FCC Warning

This device complies with part 15 of the FCC rules. Operation is subject to the following two conditions: (1) this device may not cause harmful interference, and (2) this device must accept any inte rference received, including interference that may cause undesired operation.

Changes or modifications not expressly approved by the party responsible for compliance could void the user's authority to operate the equipment.

NOTE: This equipment has been tested and found to comply with the limits for a Class B digital device, pursuant to part 15 of the FCC Rules. These limits are designed to provide reasonable protection against harmful interference in a residential installation. This equipment generates uses and can radiate radio frequency energy and, if not installed and used in accordance with the instructions, may cause harmful interference to radio communications. However, there is no guarantee that interference will not occur in a particular installation. If this equipment does cause harmful interferenceto radio or television reception, which can be determined by turning the equipment off and on, the user is encouraged to try to correct the interference by one or more of the following measures:

- Reorient or relocate the receiving antenna.
- Increase the separation between the equipment and receiver.
- Connect the equipment into an outlet on a circuit different from that to which the receiver is connected.
- Consult the dealer or an experienced radio/TV technician for help.

Radiation Exposure Statement

This equipment complies with FCC radiation exposure limits set forth for an uncontrolled environment. This equipment should be installed and operated with minimum distance 20cm between the radiator and your body.