MANAYO

For Better Communication

TH-01

1. Welcome to your new MANAYO headset

We appreciate your choice of MANAYO headset. Before use, please read this manual carefully,and keep for future reference to learn more and get support.

2. Important Safety Information

- Do not use the headset at a high volume for any extended period to prevent hearing damage.
- The TH-01 can be powered by built-in rechargeable battery, please charge the battery for at least 2 hours before first use.
- Removal of the battery in the headset shall NOT be conducted on your own.
- Do not expose the headset to moisture, extreme of prolonged heat, cold, humidity, or other adverse conditions.
- Clean the unit with a soft cloth or damp chamois leather. Never use solvents.
- Keep the headset, accessories and packaging parts out of reach of children to prevent accidents and choking hazards.
- Do not drop, crush, bend or apply excessive force to the device.

3. Operations

- Functional Guide

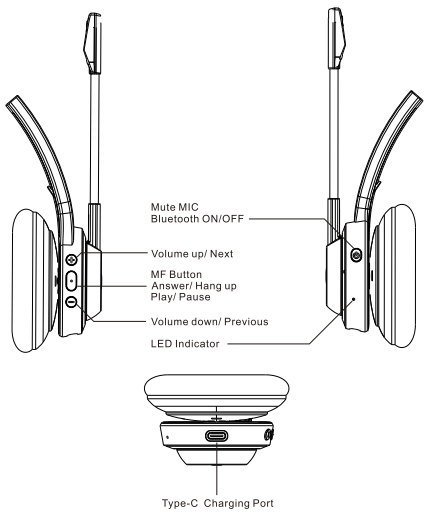

Tips:
The volume of the headset can be adjusted via the headset button and your phone. If you still feel the volume is too low or too loud in one of these two ways, you can adjust it in another way to get the proper volume.

- **Charging the Headset**
  The built-in battery is rechargeable and please use the included Type-C cable to charge the headset by connecting to a USB port of your computer, powerbank or into an USB AC adapter(requires 5VDC)
  Turn off the headset before charging, while charging, the RED light stays on. Once fully charged, the red light will go off and the BLUE light will go on.

- **Power On**
  When the headset is off, press and hold the MF button about 3 seconds until you hear 'power on', and you will see the blue light stays on.

- **Power Off**
  When the headset is on, press and hold the MF button about 3 seconds until you hear 'power off', and you will see red light flash, then go off.

- **Pairing & Connection**
  When the headset is off, press and hold the MF button about 3 sec unitl the blue & red light blinks alternately.
  The headset enters pairing mode.
  Turn on Bluetooth function of your device(phone) and select 'search' or 'discovery' devices, then select 'TH-01 'from the list, the headset will be connected to your phone.
  If requested, type the password or pin '0000'..
  If the Bluetooth on your device(phone)remains on, the headset will be connected automatically when you restart it next time. No need to pair again.

- **Answer/Reject/Hang up**
  When a call is coming, press the MF button once to answer the call and press it again to end the call.
  When a call is coming, press and hold the MF button 2 sec to reject the call.

- **Volume Adjustment**
  Make sure the headset is connected to your phone.
  Press the volume up'+'
  you will hear the volume going up.
  Press the volume down'-'.
  you will hear the volume going down.

- **Play/Pause**
  Make sure the headset is connected to your phone.
  When playing music, Press the MF button once to pause, press again to play .

- **Previous/Next Song**
  Make sure the headset is connected to your phone.
  When playing music, Press and hold the volume up'+' button to play next song, Press and hold the volume down'-' button to play previous song.

- **MUTE MIC**
  Make sure the headset is connected to your phone.
  When the headset in the call press the MUTE MIC , the headset will mute MIC

4. Specifications

Item : ENC Bluetooth Headphones
Bluetooth specification : Bluetooth V5.3
Battery Capacity:400mAh
Work voltage:3.7v
Working time:>40h
Charging time: 2h
Charging Voltage:DC5V
Speaker diameter:φ40mm
Speaker frequency range:20-20kHz
Speaker impedance:32Ω
Sensitive:115dB

铜版纸材，正反面印刷

FCC Requirement

1.changes or modifications not expressly approved by the party responsible for compliance could void the user’s authority to operate the equipment.

This device complies with Part 15 of the FCC Rules. Operation is subject to the following two conditions:

(1) this device may not cause harmful interference, and

(2) this device must accept any interference received, including interference that may cause undesired operation.

This equipment has been tested and found to comply with the limits for a Class B digital device, pursuant to part 15 of the FCC Rules. These limits are designed to provide reasonable protectionagainst harmful interference in a residential installation. This equipment generates, uses and can radiate radio frequency energy and, if not installed and used in accordance with the instructions, may cause harmful interference to radio communications. However, there is no guarantee that interference will not occur in a particular installation. If this equipment does cause harmful interference to radio or television reception, which can be determined by turning the equipment off and on, the user is encouraged to try to correct the interference by one or more of the following measures:

•Reorient or relocate the receiving antenna.

•Increase the separation between the equipment and receiver.

•Connect the equipment into an outlet on a circuit different from that to which the receiver is connected.

•Consult the dealer or an experienced radio/TV technician for help.

Caution: Any changes or modifications to this device not explicitly approved by manufacturer could void your authority to operate this equipment.

This device complies with part 15 of the FCC Rules. Operation is subject to the following two conditions: (1) This device may not cause harmful interference, and (2) this device must accept any interference received, including interference that may cause undesired operation.

RF Exposure Information

The device has been evaluated to meet general RF exposure requirement. The device can be used in portable exposure condition without restriction.