K58S55 5.8GHz Microwave Motion Sensor

加宽哥个人微信
雷达感应行情先手掌控

朗宽企业公众号
扫码关注更多信息

朗宽半导体有限公司
Lanquad Semiconductor Co.,Ltd
Tel:+86-25-8690 6106 Web:www.lanquad.com
中国·南京·江北新区研创园·江淼路88号腾飞大厦C座14楼

K58S55 5.8GHz Microwave Motion Sensor

K58S55 is a compact microwave sensor, which is operating at ISM 5.8GHz band. It works on the principle of the 'Doppler effect'. If a movement in the detection zone changes the echo pattern, the sensor responds and generate control signal to switch light on. The compact size, low power consumption, customized detection distance and time delay make K58S55 ideal for scenarios of smart lighting, security monitoring, intelligent control system.

K58S55 Back View

Features

- Support ISM 5.8GHz
- Size: 19*19.8mm
- Operating Voltage: 5-12V
- Customized detection range, time delay, ambient threshold.
- 180°detection range when wall mount
- 360°detection range when ceiling mount
- Built-in anti-interference algorithm. Excellent performance.
- Support modes of Quick-Test and Aging. Easier for customer's verification.

Applications

- LED Lights
- Security Monitoring;
- Intelligent Control System.

Ordering Information

Product Name	PCB Oil	Delay（s）	Photocell	Variance
PBA-K58S55	- WF（white)	- 030 (Could be customized)	L（with） N（without）	A B ... (Could be customized）

Absolute Maximum Rating Note[1]

Parameter	Designation	Rating	Unit
Vin	Input Voltage	12	Vdc
Topt	Operation Temperature	-20～85	℃
Tstg	Storage Temperature	-45～150	℃
ESD	Human-Body Model Note[2]	2	KV

Note 1：Stresses above those listed under Absolute Maximum Ratings may cause permanent damage to the device.
Note 2：MIL-STD-883C. Human body equivalent capacitance of 100pF and resistance of 1.5kΩ.

Specification

Parameter	MIN	TYP	MAX	Unit	Comment
Frequency range	5.725	5.80	5.875	GHz	ISM 5.8GHz
Transmission power		3		dBm	
Power supply	5	9	12	V	DC
Output High	4.0	4.3		V	
Output Low			0.4	V	
Current		12		mA	
Installation height Note 3		3	5	m	
Detection range Note 4		4		m	Could be customized
Delay	1sec ± 0.5sec to 30min ± 1min				Could be customized
Photocell threshold		10	20	Lux	Could be customized
Operating temperature	-20		85	℃	

Note 3: Has impact on detection range
Note 4: Measurement averaged over 360° detection range with 3m installation height of ceiling mount

Pin Description Note5

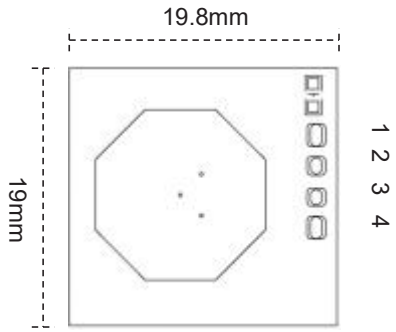

Pin NO.	Pin Name	Description
1	RX	External input signal. Could be customized.
2	GND	Ground
3	OUT	Digital Output (could be customized) - High/Low (1-Motion；0-Still) - PWM
4	Vin	Power Supply

Note 5——Pin1-Pin4 Compatible with 2.0mm/2.54mm pin

Operation Modes

Normal Detection Mode	Power on -> Light ON 3s (default. Could be customized) -> Off 2s -> Normal detection mode	Note: These modes require matching between sensor and driver side. Refer to sales/FAE team for more information.
Quick-Test mode	Power ON and OFF for 3 times -> Light flashes 3 times -> Quick-Test mode. Delay time = 5s,regardless of photocell.Quick-Test mode lasts 4min and then sensor turns into normal detection mode.	
Aging mode	Power ON and OFF for 10 times -> Light flashes 5 times -> Aging mode. Light always ON,regardless of photocell, until power on again. This modes makes customer's verification easier.	

Verification Result

The module could be ceiling- or wall- mounted. The detection areas are given as below. (Variation exists due to mechanics, installing methods, etc)

【Ceiling mounted】

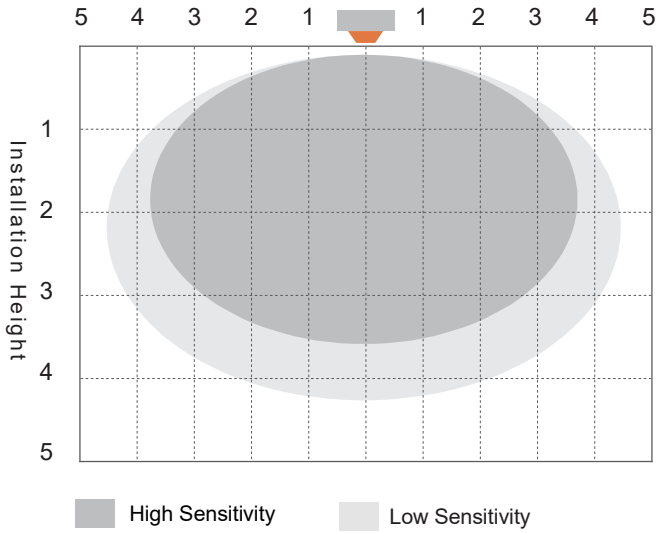

【Wall mounted】

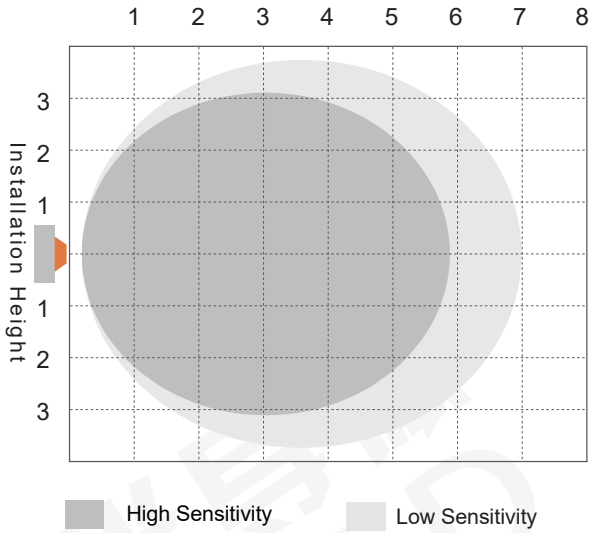

Note 6——Typical test environment,Tester: 170cm, 65kg, speed: 1m/s

Note 7——Power supply 9V, Ripple < 100mV, Ta = 25℃.

Note 8——The result given above is for reference. Variance exists due to test environment changes.

Installation Guide

1. No inductance beneath sensor module as inductance may introduce interference with sensor.
2. Keep power supply as clean as possible. 100uF capacitor is recommended on power supply side.
3. Keep antenna plane at least 3mm away from nearby stuffs.
4. Too big (eg, playground)or too small space (< 2m²) shall be avoided as sensor's performance might degrade.
5. No metallic stuff in front of antenna.

Revision History

Date	Comment	Revision
11/11/2023	First Release	A

FCC STATEMENT

This device complies with Part 15 of the FCC Rules. Operation is subject to the following two conditions:
This device may not cause harmful interference, and
This device must accept any interference received, including interference that may cause undesired operation.

Warning: Changes or modifications not expressly approved by the party responsible for compliance could void the user's authority to operate the equipment.

Note: This equipment has been tested and found to comply with the limits for a Class B digital device, pursuant to part 15 of the FCC Rules. These limits are designed to provide reasonable protection against harmful interference in a residential installation. This equipment generates uses and can radiate radio frequency energy and, if not installed and used in accordance with the instructions, may cause harmful interference to radio communications. However, there is no guarantee that interference will not occur in a particular installation. If this equipment does cause harmful interference to radio or television reception, which can be determined by turning the equipment off and on, the user is encouraged to try to correct the interference by one or more of the following measures:

-Reorient or relocate the receiving antenna.
-Increase the separation between the equipment and receiver.
-Connect the equipment into an outlet on a circuit different from that to which the receiver is connected.
-Consult the dealer or an experienced radio/TV technician for help.

The device has been evaluated to meet general RF exposure requirement. The device can be used in portable exposure condition without restriction.

Integration instructions for host product manufacturers according to KDB 996369 D03 OEMManual v01

Conditions on using Lanquad Semiconductor Co.Ltd regulatory approvals:
A. Customer must ensure that its product (the“CUSTOMER Product”) is electrically identical to Lanquad Semiconductor Co.Ltd reference designs. Customer acknowledges that any modifications to Lanquad Semiconductor Co.Ltd reference designs may invalidate regulatory approvals in relation to the CUSTOMER Product, or may necessitate notifications to the relevant regulatory authorities.
B. Customer is responsible for ensuring that antennas used with the product are of the same type, with same or lower gains as approved and providing antenna reports to Lanquad Semiconductor Co.Ltd.
C. Customer is responsible for regression testing to accommodate changes to Lanquad Semiconductor Co.Ltd reference designs, new antennas, and portable RF exposure safety testing/approvals.
D. Appropriate labels must be affixed to the CUSTOMER Product that comply with applicable regulations in all respects.
E. A user’s manual or instruction manual must be included with the customer product that contains the text as required by applicable law. Without limitation of the foregoing, an example (for illustration purposes only) of possible text to include is set forth below:

2.2 List of applicable FCC rules
FCC Part 15 Subpart C 15.249 & 15.207 & 15.209& 15.205

2.3 Specific operational use conditions
Operation Frequency:5730~5835MHz
Number of Channel:36 Channels
Modulation Type:CW
Antenna Type:PCB antenna
Antenna Gain(Peak):3.5 dBi (Provided by customer)
The module can be used for mobile or portable applications with a maximum 3.5dBi antenna. The host manufacturer installing this module into their product must ensure that the final composit product complies with the FCC requirements by a technical assessment or evaluation to the FCC rules, including the transmitter operation. The host manufacturer has to be aware not to provide informationto the end user regarding how to install or remove this RF module in the user's manual of the end product which integrates this module. The end user manual shall include all required regulatory information/warning as show in this manual.

2.4 Limited module procedures
Not applicable. The module is a Single module and complies with the requirement of FCC Part 15.212.

2.5 Trace antenna designs
Applicable.
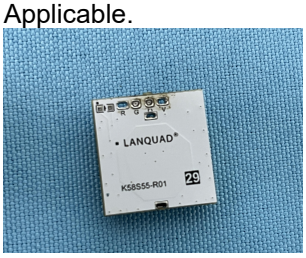

2.6 RF exposure considerations
The device can be used in portable exposure condition without restriction and if RF exposure statement or module layout is changed, then the host product manufacturer required to take responsibility of the module through a change in FCC ID or newapplication. The FCC ID of the module cannot be used on the final product. In these circumstances, the host manufacturer will be responsible for re-evaluating the end product (including the transmitter) and obtaining a separate FCC authorization.

2.7 Antennas
Antenna Specification are as follows:
Antenna Type:PCB antenna
Antenna Gain(Peak):3.5 dBi (Provided by customer)
This device is intended only for host manufacturers under the following conditions:
The transmitter module may not be co-located with any other transmitter or antenna;
The module shall be only used with the External antenna(s) that has been originally tested and certified with this module. The antenna must be either permanently attached or employ a ‘unique’antenna coupler.

As long as the conditions above are met, further transmitter test will not be required. However, the host manufacturer is still responsible for testing their end-product for any additional compliance requirements required with this module

installed (for example, digital device emissions, PC peripheralrequirements, etc.).

2.8 Label and compliance information

Host product manufacturers need to provide a physical or e-label stating “Contains FCC ID: 2BDOX-K58S55 With their finished product.

2.9 Information on test modes and additional testing requirements

Operation Frequency:5730~5835MHz
Number of Channel:36 Channels
Modulation Type:CW
Antenna Type:PCB antenna
Antenna Gain(Peak):3.5 dBi (Provided by customer)
Host manufacturer must perfom test of radiated & conducted emission and spurious emission, etcaccording to the actual test modes for a stand-alone modular transmitter in a host, as well as for multiple simultaneously transmitting modules or other transmitters in a host product.
Only when all the test results of test modes comply with FCC requirements, then the end product canbe sold legally.

2.10 Additional testing, Part 15 Subpart B disclaimer

The modular transmitter is only FCC authorized for FCC Part 15 Subpart C 15.247 & 15.207 & 15.209 & 15.205and that the host product manufacturer is responsible for compliance to any other FCC rules that apply to the host not covered by the modular transmitter grant of certification. If the grantee markets their product as being Part 15 Subpart B compliant (when it also contains unintentional-radiator digital circuity), then the grantee shall provide a notice stating that the final host product still requires Part 15 Subpart B compliance testing with the modular transmitter installed.