Product Number: **WL-2458E157**
Product Name: **2.4G/5G WIFI Antenna**

Index:

1. Mechanical and Packing Drawing / Page 2

2. Revision History / Page 3

3. Specification / Page 4

4. Characteristics and Reliability Test / Page 5-6

5. Antenna - S Parameter Test Data / Page 7

6. Antenna - Radiation Pattern Test Data / Page 8-9

REV	DATE	DESCRIPTION

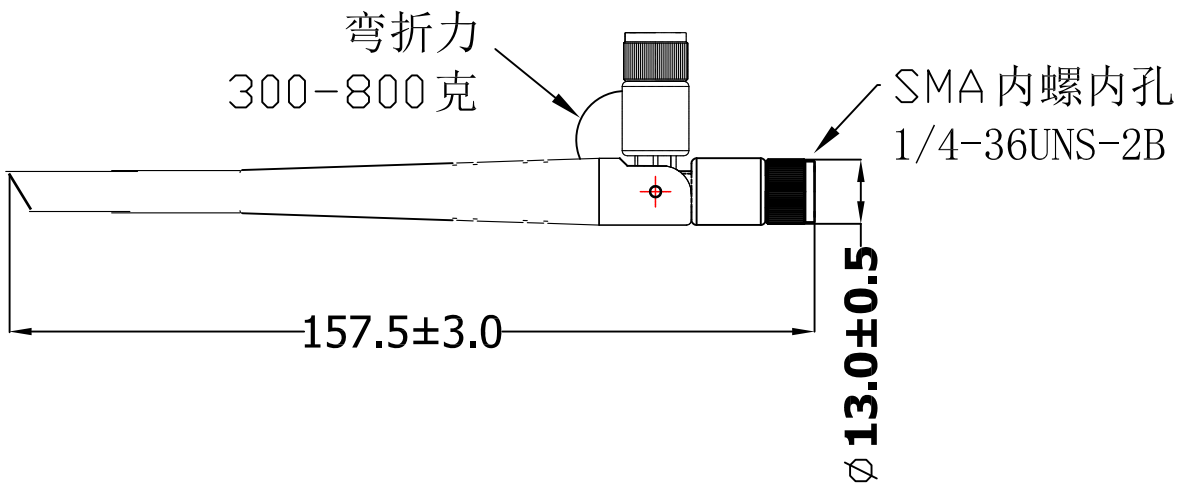

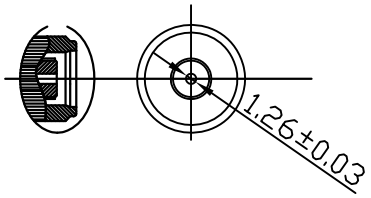

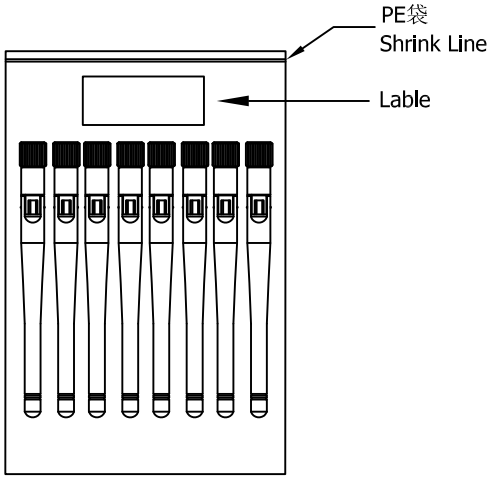

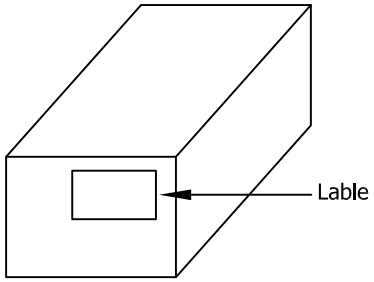

Specification(Free Space):

Frequency Range: 2.4/5.8GHz

Impedance: 50 Ω

VSWR: 2.0 max

Gain: 4.5dbi

Packing: 20pcs/bag 35bag/箱 共计每箱700PCS

	XX.	±5.0	APPROVED	CUSTOMER:		
	X.	±3.0		PART NO :		
	.X	±1.0	CHECKED	PART NAME: 2.4/5.8GHz Antenna		
CUSTOMER'S SINGATURE	.XX	±0.5		WAVELINK P/NO : WL-2458E157		
	.XXX	±0.1	DRAWING	REV	UNIT	FILE :
			Robert 9/10	X1	mm	SHEET : 1/1

昆山市海宣电子有限公司

Kunshan WaveIlnk Elecktronlc Co.,Ltd.

2. Revision History

Revision	Date	Change Notification	Description
1.0	2017.11.7		

3. Specification

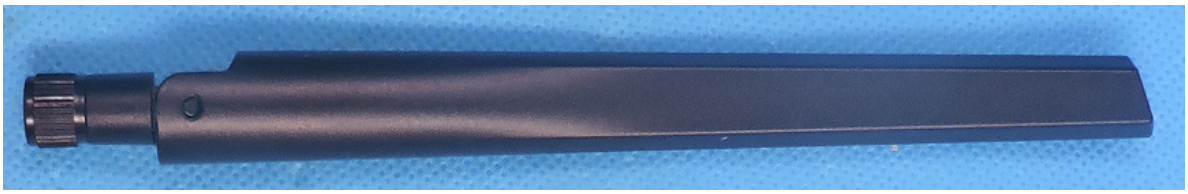

A. Electrical Characteristics	
Frequency	**2400 ~ 2500 MHz** **5150 ~ 5850 MHz**
S.W.R.	**<= 2.0** **The data is tested with 1M cable**
Peak Gain	**2.73dBi @ 2400 ~ 2500 MHz** **4.74 dBi @ 5150 ~ 5850 MHz**
Polarization	**Linear**
Impedance	**50 Ohm**
B. Material & Mechanical Characteristics	
Material of Radiator	**Cu**
Material of Plastic	**Body1 : TPEE** **Body2 : ABS** **Base: PC**
Cable Type	**O.D. 1.13 mm**
C. Environmental	
Operation Temperature	**- 40 ˚C ~ + 65 ˚C**
Storage Temperature	**- 40 ˚C ~ + 80 ˚C**
Antenna Color Storage life	**< 1** year

4. Characteristics and Reliability Test

Test Items 測試項目		Test Condition and Procedure 測試方法	Requirements 要求	Result 結果
C1	V.S.W.R. 電壓駐波比	Set DUT on Network Analyzer; make individual calibration to test 設置網路分析儀參數進行測試	Directive DUT specification 符合待測物規範	PASS
C3	Antenna Gain 天線增益	Set DUT on Antenna Chamber; make individual calibration to test 設置天線暗室參數進行測試	Directive DUT specification 符合待測物規範	PASS
M1	Vibration 震動	GB / T2423.48-2008 Amplitude: 0.03 inch (1.5mm); Freq: 20 to 80 to 20 Hz 3 directions; 2 hours for each direction 振幅 1.5mm；頻率 20~80~20Hz；3 個方向各 2H	1. No Visual Damage 2. Frequency Tol.≤5% 無明顯外觀不良;頻率偏移≤5%	PASS
M2	Random Drop 跌落	GB / T2423.8-1995 Single：Height: 1.0 Meter; 3 directions; 1 time for each direction 單支天線，高 1m；3 個方向各 1 次	1. No parts separated、fracture 2. Frequency Tol.≤5% 產品無脫落、斷裂;頻率偏移≤5%	PASS
		Packing：Height: 0.76 Meter; 1 corner, 3 edges, 6 surface 包裝：高 0.76m，一角、三棱、六面各一次		PASS
M6	Dimension 尺寸	Inspection of dimension, color, material, package, surface process.检查尺寸,颜色,材料,包装,表面處理	Directive DUT specification 符合待測物規範	PASS
E3	Temperature and Humidity Chamber 恒溫恒濕	GB / T 2423.3-2006 Temp: 80°C / 12 H; -40°C / 12H RH: ≥ 90%; Time: 24H 溫度 80°C 測試 12H 轉-40°C 測試 12H；濕度≥ 90%；時間 24H	After 2 Hours Recovery 1. No Visual Damage 2. Frequency Tol.≤5% 恢復 2H 后，無明顯外觀不良;頻率偏移≤5%	PASS
E4	Thermal Shock 冷熱衝擊	GB / T 2423.22 - 2008 - 40°C (30 minutes) to + 80°C (30 minutes)；Cycles: 24 - 40°C 測試 30 分轉 80°C 測試 30 分為一個週期；共 24 週期	After 2 Hours Recovery 1. No Visual Damage 2. Frequency Tol.≤5% 恢復 2H 后，無明顯外觀不良;頻率偏移≤5%	PASS
E5	Aging test	GB /T 2423.2 - 2008	After 2 Hours Recovery	PASS

	老化	Temp: 80°C; Time: 24 hours 溫度 80°C，測試 24H	1. No Visual Damage 2. Frequency Tol.≤5% 無明顯外觀不良;頻率偏移≤5%	
R1	RoHS	With Reference to IEC 62321:2008 with flow chart 參考 IEC 62321 測試流程	Directive RoHS 2011/65/EU 符合 RoHS 2011/65/EU 標準	PASS
R2	PFOS	With Reference to USA EPA 3550C:1996 by LC/MS 參考 USA EPA 3550C 測試流程	Directive RoHS 2006/122/EC 符合 RoHS 2011/65/EU 標準	PASS

5. Antenna - S Parameter Test Data

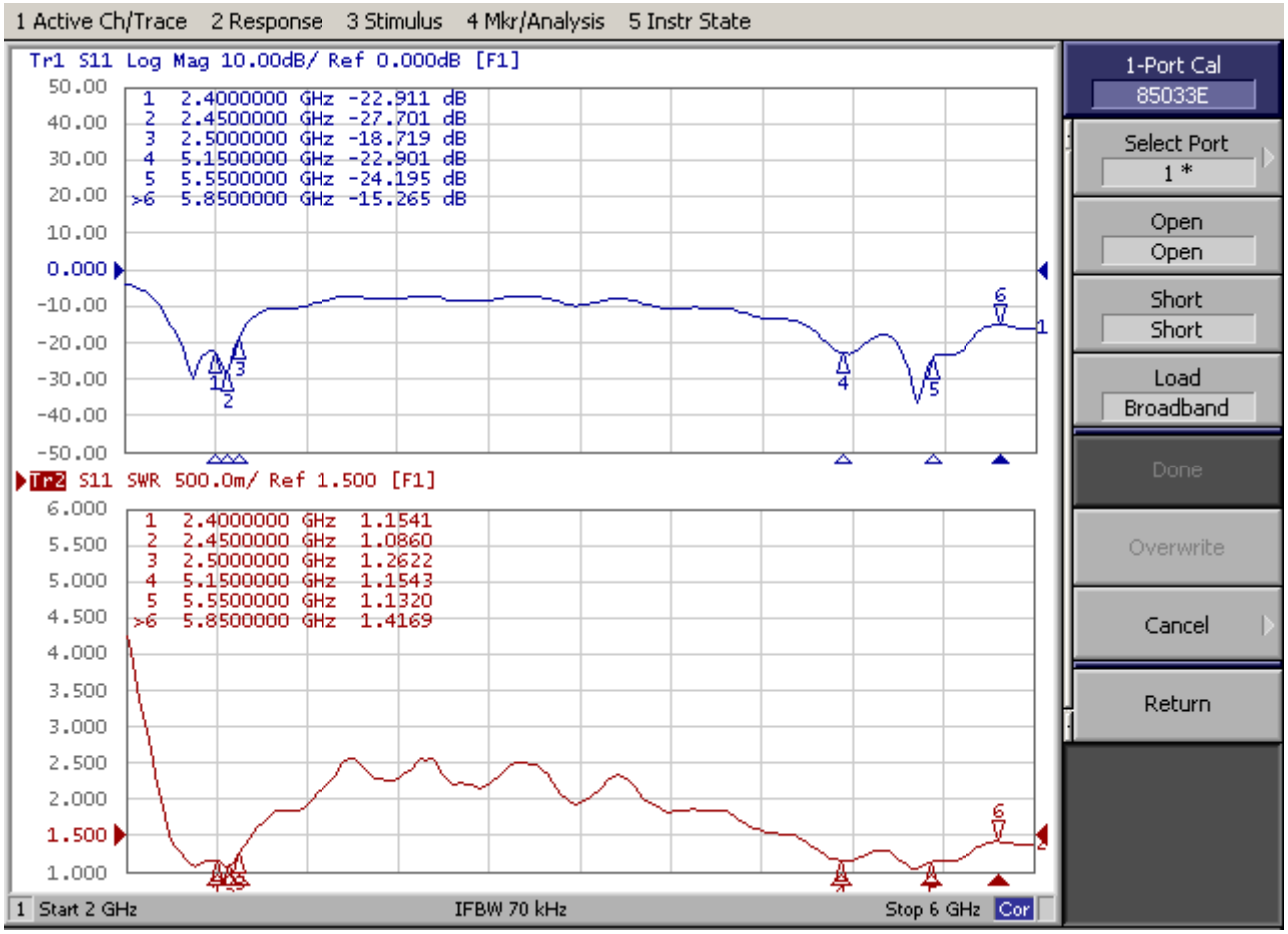

5. Antenna - Radiation Pattern Test Data

2400 MHz	2450 MHz	2500 MHz
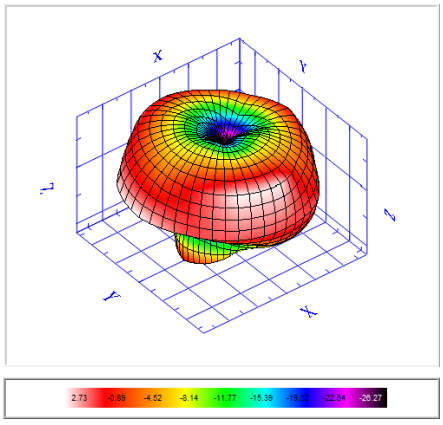	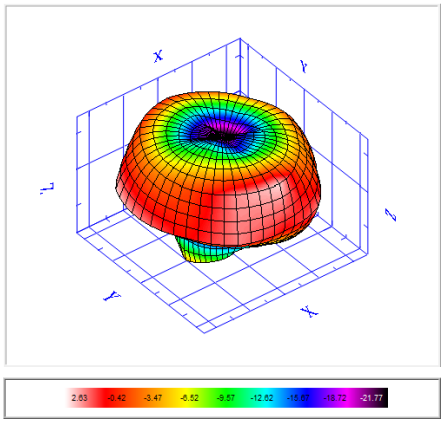	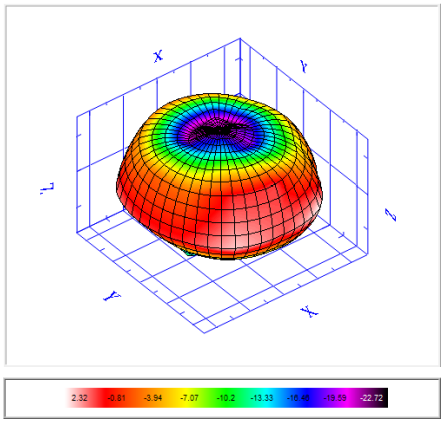

Frequency	2400	2410	2420	2430	2440	2450	2460	2470	2480	2490	2500
TRP (dBm)	-1.13	-1.17	-1.2	-1.24	-1.3	-1.13	-1.23	-1.31	-1.38	-1.34	-1.25
Peak EIRP (dBm)	2.73	2.57	2.53	2.55	2.48	2.63	2.73	2.59	2.53	2.72	2.32
NHPRP +/- 45 (degree)	-1.4	-1.44	-1.46	-1.5	-1.55	-1.39	-1.51	-1.59	-1.65	-1.62	-1.51
NHPRP +/- 30 (degree)	-1.64	-1.68	-1.69	-1.72	-1.76	-1.56	-1.65	-1.72	-1.79	-1.74	-1.65
E-Theta Peak Gain (dBi)	-8.07	-9	-9.3	-9.69	-9.85	-10.33	-11.52	-11.7	-12.32	-13.15	-14.4
E-Phi Peak Gain (dBi)	2.72	2.55	2.52	2.54	2.47	2.62	2.73	2.59	2.53	2.71	2.32
E-Total Peak Gain (dBi)	2.73	2.57	2.53	2.55	2.48	2.63	2.73	2.59	2.53	2.72	2.32
Directivity (dBi)	3.86	3.74	3.73	3.79	3.77	3.75	3.97	3.91	3.9	4.06	3.57
Efficiency (%)	77.11	76.38	75.84	75.14	74.21	77.14	75.28	73.89	72.85	73.38	74.99

5150 MHz	5725 MHz	5875 MHz
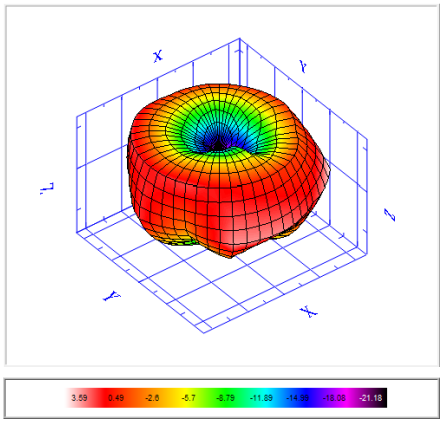	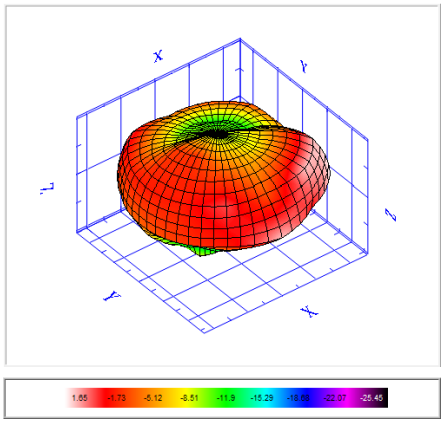	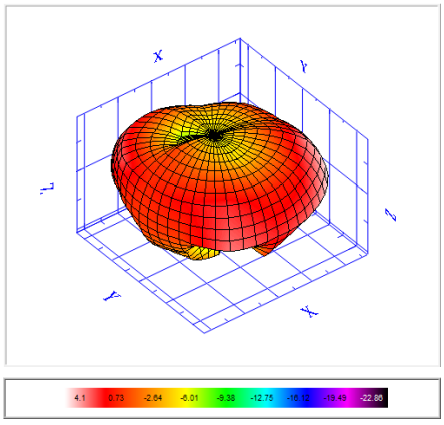

Frequency	5150	5250	5350	5470	5600	5725	5750	5800	5825	5850	5875
TRP (dBm)	-1.3	-1.03	-1.6	-1.1	-2.25	-2.9	-2.04	-1.95	-1.4	-1.02	-0.82
Peak EIRP (dBm)	3.59	4.3	4.28	4.74	2.6	1.65	2.59	2.49	3.82	3.9	4.1
NHPRP +/- 45 (degree)	-1.63	-1.35	-1.93	-1.5	-2.79	-3.47	-2.55	-2.41	-1.81	-1.41	-1.21
NHPRP +/- 30 (degree)	-1.53	-1.32	-1.96	-1.55	-2.87	-3.62	-2.78	-2.68	-2.17	-1.78	-1.58
E-Theta Peak Gain (dBi)	-10.72	-10.03	-10.12	-9.85	-10.6	-9.25	-9.28	-8.74	-9.99	-8.47	-8.27
E-Phi Peak Gain (dBi)	3.58	4.29	4.24	4.6	2.45	1.48	2.36	2.41	3.72	3.81	4.01
E-Total Peak Gain (dBi)	3.59	4.3	4.28	4.74	2.6	1.65	2.59	2.49	3.82	3.9	4.1
Directivity (dBi)	4.89	5.33	5.89	5.84	4.85	4.55	4.63	4.44	5.22	4.92	4.92
Efficiency (%)	74.07	78.94	69.14	77.69	59.53	51.29	62.47	63.86	72.47	79.09	82.81