5G 5.8GHz Base Station

Product Manual

Shenzhen AI-LINK Network Co., LTD

CONTENTS

CONTENTS 1
CHAPTER 1 OVERVIEW 1-1
1.1 Introduction of 5G MobileCommunication System 1-1
1.2 Product Orientation 1-1
CHAPTER 2 PRODUCT FEATURES 2–1
2.1 Major Technical Features 2–1
2.2 Technical Specifications 2–1
2.2.1 BB1000-Jtechnical parameter 2–1
2.2.2 RU1606 technical parameter 2–2
2.3 Product Appearance 2–3
2.3.1 BB1000-J Appearance 2–3
2.3.2 RU1606Appearance 2–4
CHAPTER 3 Installation 3–7
3.1 Instructions on Safety Symbols 3–7
3.2 BB1000-JInstallation 3–7
3.3 GPS Installation 3–8
3.4 RU1606 Installation 3–9
3.4.1 Introduction to Mounting Back frame 3–9
3.4.2 Installation by Holding Pole 3–10
AppendixA：Acronyms and Abbreviations 3–13

CHAPTER 1 OVERVIEW

AI-LINK is not only the leader of 5G technology standard, but also takes the lead in the research of 5G system network equipments， product test and trial network operation. AI-LINK not only provides 5G mobile network equipment, but also supplies customized solution, which can satisfy different operators' requirements. In this way, AI-LINK can provide differentiated services for different customers. Consequently, it can bring excellenteconomic benefits for operators.

This chapter introduces network solutions of 5G mobile communication system at first, and then is followed by the product characteristics of 5G 5.8GHz Base Station.

1.1 Introduction of 5G Mobile Communication System

Diagram of typical 5G system networks is shown as below in Figure 1-1.

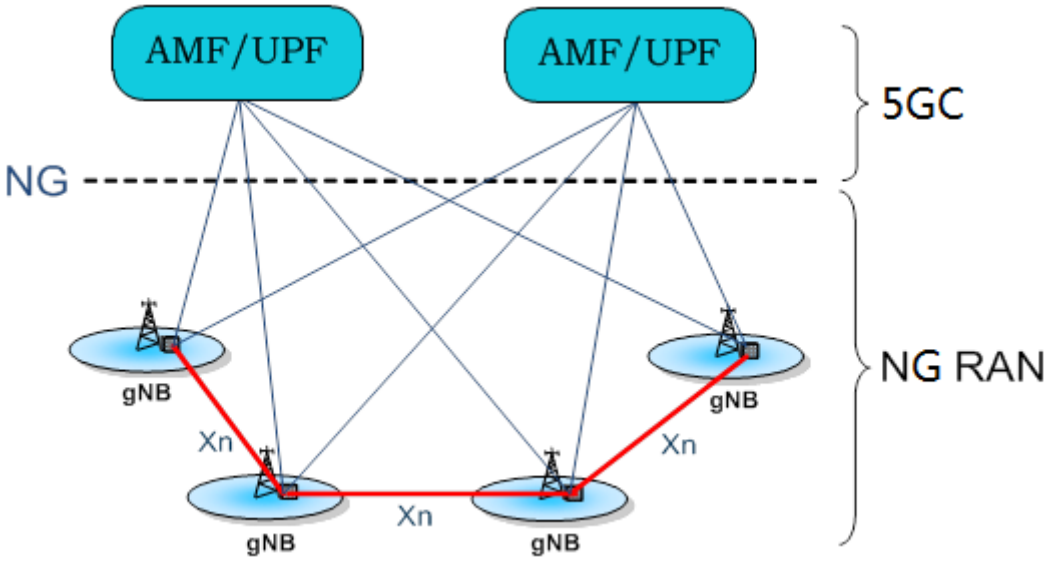

Figure 1-1the Diagram of 5G System Networks

1.2 Product Orientation

AI-LINK can provide solutions of 5G system according to different demands.

The system of AI-LINK 5G 5.8GHz base station mainly includes BBU,RRU:

The type of BBU is BB1000-J.BBU stands for Base Band Unit.

The type of RRU is RU1606

- BB1000-Jmain functions are:

Switching control and transmission: synchronization function between the base station system and GPS ; 24-hour synchronization maintenance function in the event of satellite signal loss; Interfaces and interface protocol processing functions with the core network; Service and signaling exchange processing functions with various boards within the BBU; BBU internal board presence and survival detection function; Its internal board power on / off control function; Its internal board clock distribution functions, etc.

Baseband processing: physical layer processing function; L2 processing function; system synchronization function; power-controlled delay on function; I²C SLAVE management function, etc.

CHAPTER 2 PRODUCT FEATURES

Making full use of optical remote technology,5G takes customer's demands in services, capacities, coverage, transmission, power, installation and maintenance fully into account, and adopts integrated design with high-integration to carry out far-end independent coverage, and saves sites resources, which highly reflects AI-LINK's idea of customized services.

2.1 Major Technical Features

- 5G oriented and advanced system structure
- Adopt resource pool design to improve effectiveness of hardware resource and fault-tolerance ability of system.
- Apply digital intermediate frequency to improve signal processing ability.
- Power fulprocessing ability of single cell, and support high-power coverage and large bandwidth coverage.
- Intelligent fan controlextends fan's lifespan and reduces noise.
- Support in-band adaptive-filtering to resist interference.
- Support cascading RRU to flexibly extend wireless coverage areas.
- Support operating frequency of 5725~5850MHzand achieve convenient application.

2.2 Technical Specifications

2.2.1 BB1000-Jtechnical parameter

Table 2-1BB1000-J technical parameter

Item	Parameter
Dimensions (height x width x depth)	88 mm x 440 mm x 360 mm
Full weight	18kg
Height	2U
Installation method	19-inch cabinet installation, rack installation, wall-mounted chassis installation
DC Power module capability	PEU001-J：With carrier 960W Rated 1200W
Fan maximum cooling capacity (W)	2000W
Temperature environment	-5℃ ~ +40℃
Humidity environment	15% ~ 85%

Item	Parameter
Input power	DC: -48Vvoltage range：-57~-43V
Technology that supports the environment	RoHS
BBP001-J carrier capability	3/6*100M 32TR
Maximum carrier capacity	36*100M 32TR
Optical module speed	MPT001-J support 2*10G/25G BBP001-J support 6*25G
Whether the optical module can be easily replaced	Yes
Protection level	IP20

2.2.2 RU1606 technical parameter

Table 2-2RU1606 technical parameter

Item	Parameter
Dimensions (height x width x depth)	470mm*320mm*110mm
Weight	17Kg
Frequency band(MHz）	5725-5850
BW (MHz)	100
Duplex mode	5GNR-TDD
Radio interface	N
Number of channels	NR: 4T4R
Receiving Sensitivity（dBm）	＜-97
Antenna Gain(dBi)(external)	15
Antenna Polarization	Dual Polarization
Power supply interface	48V DC voltage range：-57~-43V
Power consumption (W)	＜240
International Protection	IP65
Installation Mode	Mounted on the wall, pole
Interface type	Optical port
Interface index（Gbps）	25Gbps
Number of interfaces	2
Working temperature	-40~＋55℃
Relative humidity	5%~95%

2.3 Product Appearance

2.3.1 BB1000-J Appearance

BB1000-J chassis appearance shows in

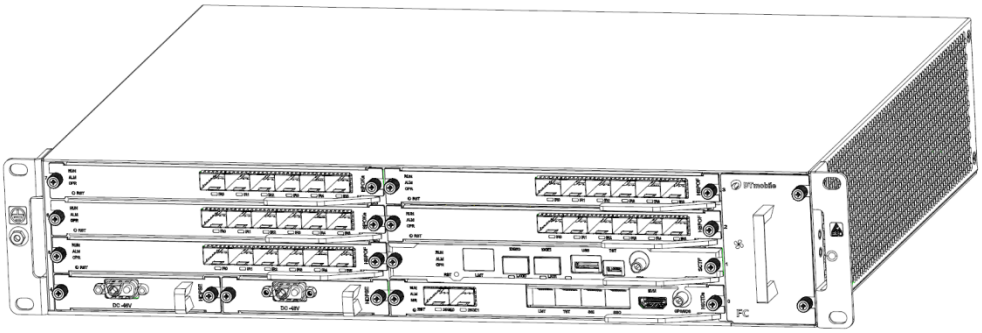

Figure 2-1 chassis appearance diagram.

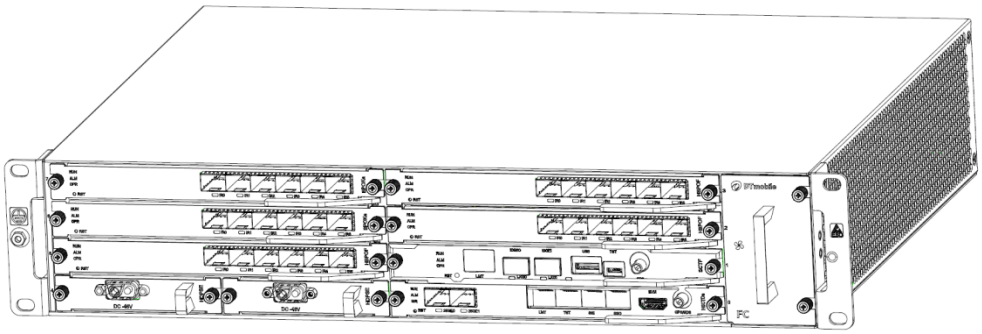

Figure 2-1 chassis appearance diagram

The main features of the chassis are as follows:

- Using sheet metal plus plastic composite panel;
- The whole chassis is electrically conductive and has good shielding ability;
- The air duct is reasonably designed and has good heat dissipation capacity;
- Easy to install and maintain the case;
- Simple appearance.

1) Chassis Hardware Unit Arrangement

BB1000-J is mainly divided into the following main components:

- Main box BB1000-J chassis
- Power supply unit PEU001-J
- Fan unit FAN001-J
- Function board MPT001-J / BBP001-J

Arrange the hardware units shows in Figure 2-2. Standard board positions shows in Figure 2-3.

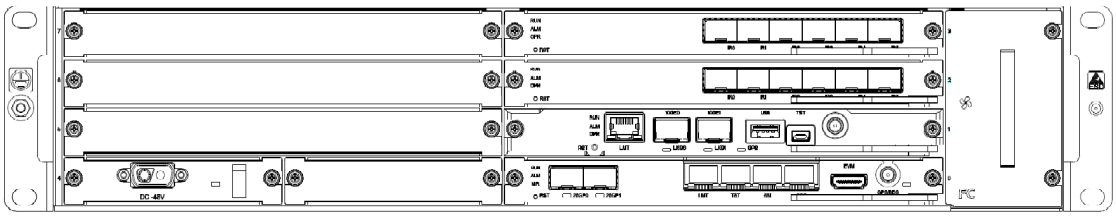

Figure 2-2Schematic diagram of hardware unit arrangement in main unit

2) Typical Configuration

Typical configuration 1：1*MPT001-J+1*BBP001-J

7		BBP001-J	3	8
6			2	
5			1	
4	PEU001-J	MPT001-J	0	

Figure 2-3 Standard board configuration（MPT001-J+BBP001-J）

2.3.2 RU1606 Appearance

According to antenna type, RU1606 is radio equipment with a external antenna antenna. Figure 2-4 shows the appearance of the RU1606.

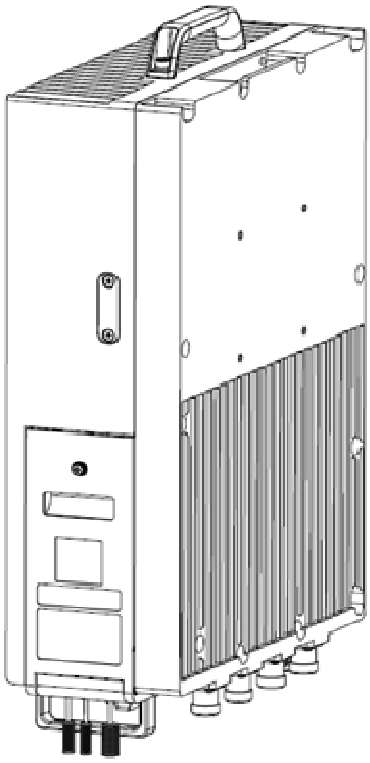

Figure 2-4RU1606 Equipment appearance

1) Physical Interface

RU1606adpots modular structures with external interfaces distributed at the bottom of the device, as shown in table 2-3.

Table 2-3RU1606 physical interface

Interface	Type	Lable	Quantity	Description
Debug interface	HDMI	Debug	1	Local maintenance
Power interface	Power interface	PWR	1	Used to connect DC -48V power.
IR interface	25G SFP+Optical connector	OP1-2	2	Used to connect BBU
Antenna interface 1 ～ 4	N Female	ANT1 ～ ANT4	4	RF transceiver signal interface
Status Indicator	LED		5	5 LED lights, indicating working status of RRU
ESC antenna interface	AISG	AISG	1	
Environmental monitoring interface	DB9	MON	1	

2) Indicator definition

RU1606adpots modular structures with external interfaces distributed at the bottom of the device, as shown in table 2-4.

Table 2-4RU1606 LED List

Led	Color	Label	Status	Meaning
PWR	Green	PWR	On	Power on normally
			Off	Power on abnormally
ALM	Red	ALM	On	Device fault alarm
			Off	No fault alarm
VSWR	Green	VSWR	On	Power-on channel device self-test is normal, no VSWR alarm
			Off	VSWR abnormal
OP1	Green	OP1	On	Optical port is normal
			Off	Fiber unlocked, or out of sync, or low power, or TXFAULT
OP2	Green	OP2	On	Optical port is normal
			Off	Fiber unlocked, or out of sync, or low power, or TXFAULT

CHAPTER 3 Installation

This chapter shows how to install 5G 5.8GHz Base Station, and provides suggestions and references also.

3.1 Instructions on Safety Symbols

See the sorts and definitions of safety symbols inTable 3-1:

Table 3-1All Sorts of Safety Symbols and Their Definitions

Safety symbols	Definitions
	The general safety alert symbol for the general safety items
	ESD protection symbol for equipment sensitive of ESD.
	Danger Shock Risk Symbol for warning the danger of electric shock
	Warning Microwave Hazard In This Area Symbol for warning the strong electromagnetic fields.
	Laser Radiation Symbol for warning the intense laser beam.
	Danger Hot Do Not Touch Symbol for warning not to touch the hot surface.

3.2 BB1000-JInstallation

When the existing 19-inch standard cabinet of BB1000-Jcan be installed in the equipment room, The 19-inch cabinet needs to provide 3U (including 1U cabling space), installation space greater than 450mm deep, and the 19-inch cabinet column is 100mm from the front door.

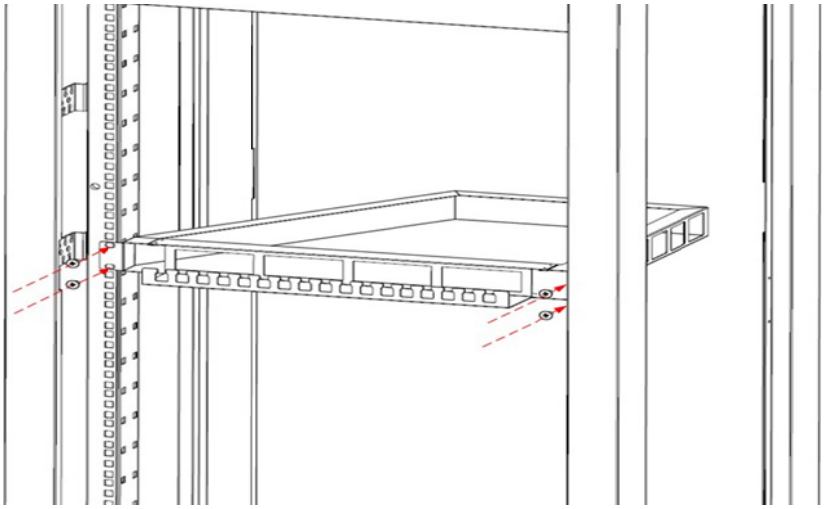

Figure 3-1 Schematic diagram of installation of wind guide

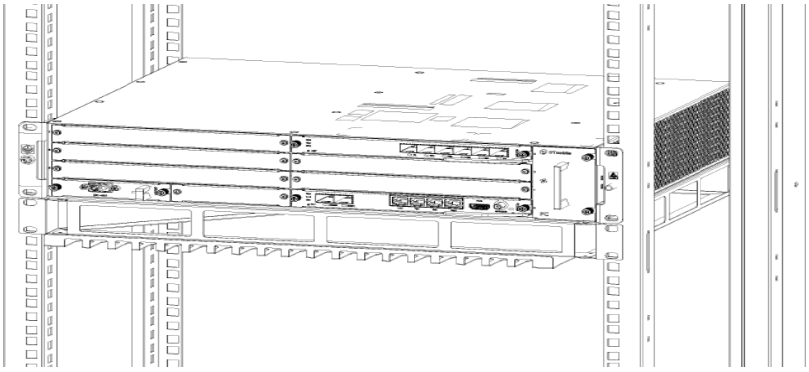

Figure 3-2BB1000-Jon tray

3.3 GPS Installation

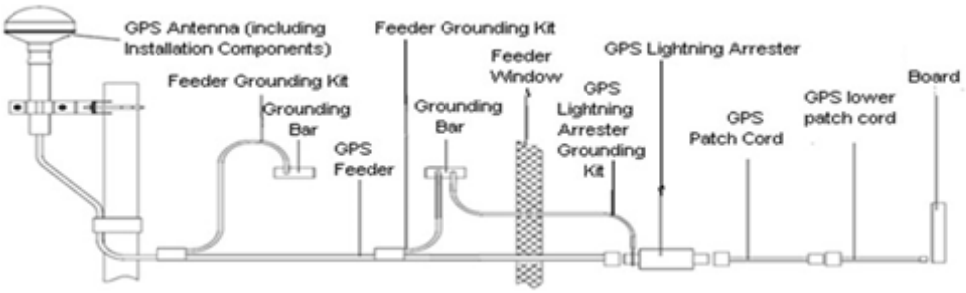

Figure 3-3 GPS System structure diagram

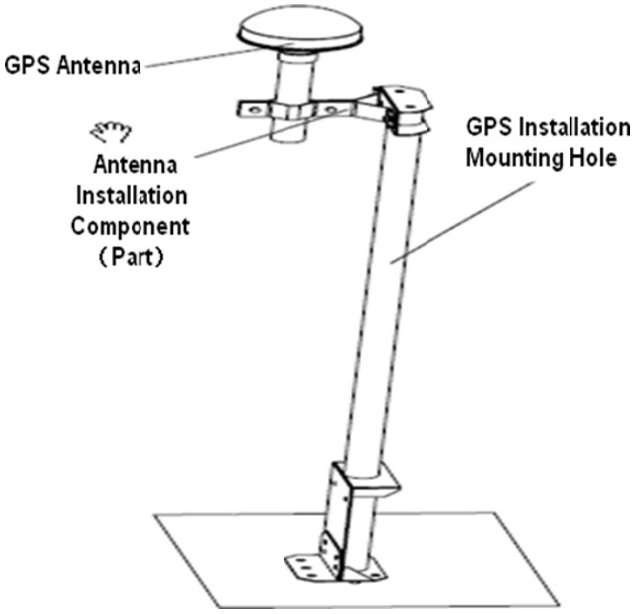

Figure 3-4 GPS antenna pole installation diagram

3.4 RU1606 Installation

3.4.1 Introduction to Mounting Back frame

The diameter of the pole matching the mounting back frame of the RRU is within 50mm~114mm, which should be 80mm (recommended); the back frame is shown in Figure 3-6.

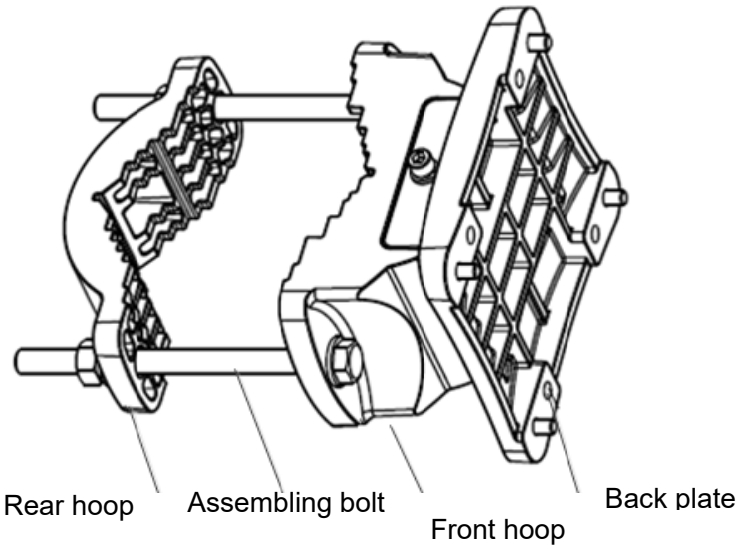

Figure 3-6 RRU back frame

3.4.2 Installation by Holding Pole

Installation steps:

1. Loosen the fastening screws on the mounting back frame. Disassemble the RRU mounting components into two parts, i.e. RRU mounting back frame and pole mounting part, as shown in Figure 3-7

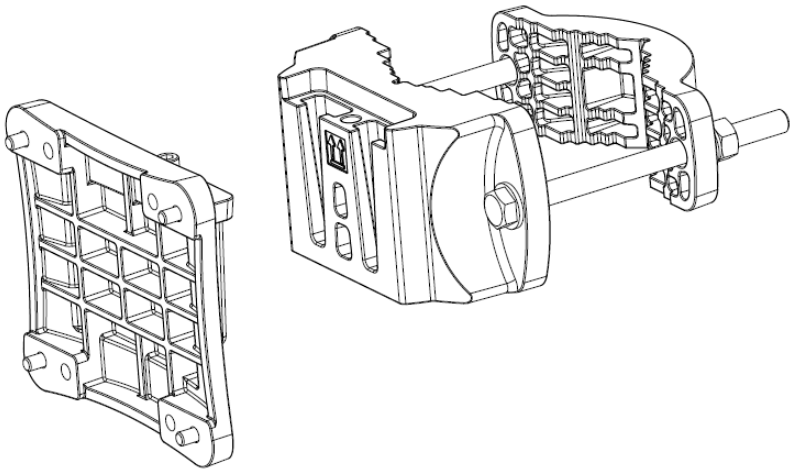

Figure 3-7 Disassemble RRU mounting components

2. Assembling the mounting part to the pole: Remove the nut (including spring washer and flat washer) from one bolt of the mounting part, then remove the bolt and keep the mounting part open on one side; apply the mounting part into the pole horizontally, and then Insert the bolt into the mounting part; adjust the mounting part, apply the flat washer, spring washer, and nut, and tighten the nut with the wrench, as shown in Figure 3-8.

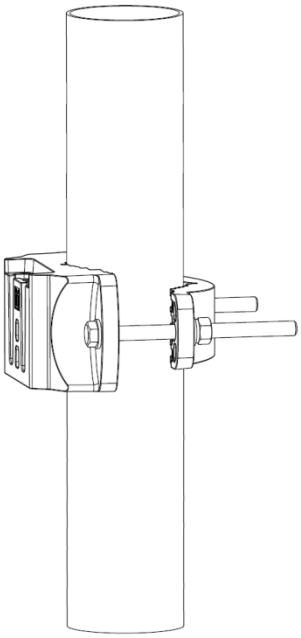

Figure 3-8 Install the RRU mounting part on the pole

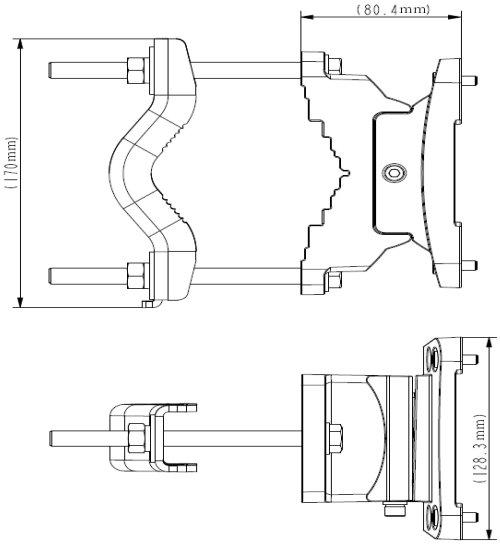

Figure 3-9 Pendant size

3. Installing the back frame on the RRU: Assemble the mounting back plate with the RRU. Align the four fixing holes on the outside of the back plate with those on the back of the RRU, and tighten the back plate to the RRU with four screws (note the side with screws should face up), as shown in Figure 3-10.

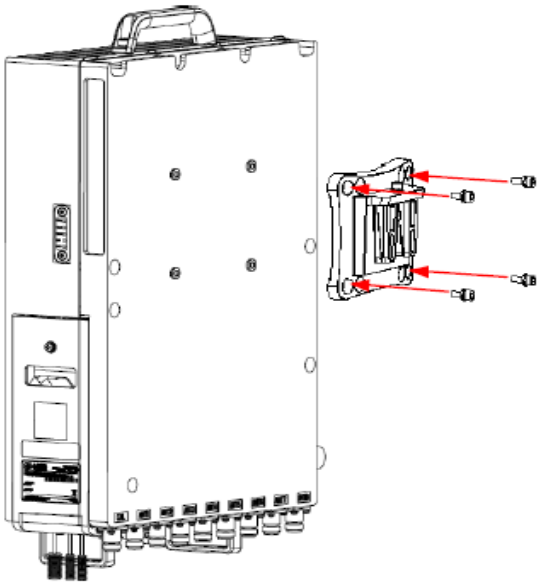

4. Mounting the RRU: Hold the RRU with both hands and keep the mounting back frame directly above the pole fixing part. Move it down to fix the mounting back frame with the pole mounting part; pass the fastening screw through the top of the mounting back frame and the connecting hole of the pole mounting part, and tighten it with the hexagon screwdriver, as shown in Figure 3-11.

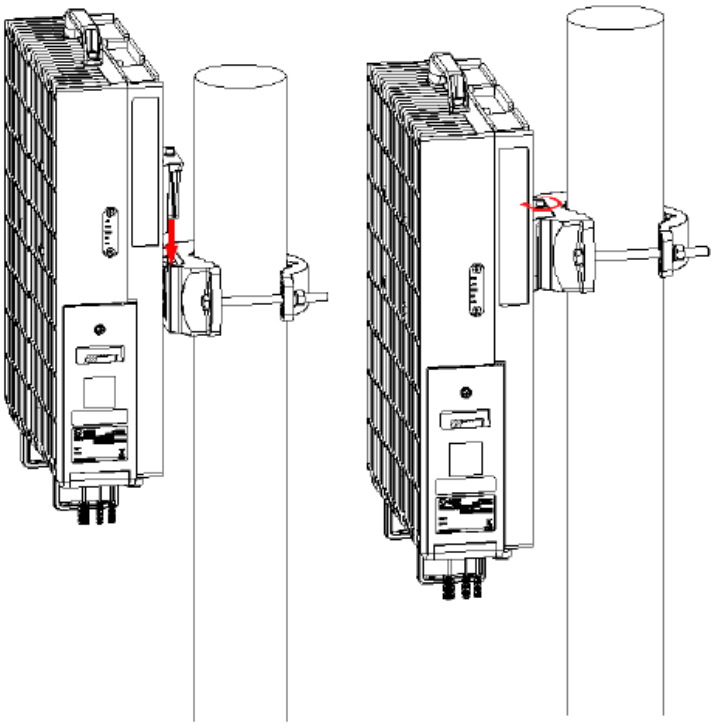

Figure 3-11 Install the RRU by holding pole

AppendixA：Acronyms and Abbreviations

Abbreviation	Full Spelling
AC	Alternating Current
ALM	Alarm
BBU	BaseBand Unit
BD	BeiDou
CPRI	Common Public Radio Interface
DAS	Distributed Antennas system
DC	Directing Current
GE	Giga－Ethernet
GPS	Global Positioning System
I^2C	Inter-Integrated Circuit
IP	Internet Protocol
Ir	Interface between the RRU and the BBU
LMT	Local Maintenance Terminal
MIMO	Multiple-Input Multiple-Output
NR	New Radio Access
ODF	Optical Distribution Frame
OBW	Operating Bandwidth
PoE	Power over Ethernet
RRU	Radio Remote Unit
pRU	RRU
rHUB	RRU Hub
TDD	Time Division Duplexing

For 5.8GHz Radio Unit

Any Changes or modifications not expressly approved by the party responsible for compliance could void the user's authority to operate the equipment.

This device complies with part 15 of the FCC Rules. Operation is subject to the following two conditions: (1) This device may not cause harmful interference, and (2) this device must accept any interference received, including interference that may cause undesired operation.

Note: This equipment has been tested and found to comply with the limits for a Class A digital device, pursuant to part 15 of the FCC Rules. These limits are designed to provide reasonable protection against harmful interference when the equipment is operated in a commercial environment. This equipment generates, uses, and can radiate radio frequency energy and, if not installed and used in accordance with the instruction manual, may cause harmful interference to radio communications. Operation of this equipment in a residential area is likely to cause harmful interference in which case the user will be required to correct the interference at his own expense.

This equipment complies with FCC radiation exposure limits set forth for an uncontrolled environment. This equipment should be installed and operated with minimum distance 20cm between the radiator& your body.