东莞市一佳电子通讯科技有限公司

Dongguan YiJia Electronics Communication Technology Co.,Ltd.

规 格 承 认 书

SPECIFICATION FOR APPROVAL

日 期 Date	2023/06/21
编 号 File No	23062102
版 本 Revision	1.0

客 户 CUSTOMER: 万利达

客户料号 CUSTOMER NO: SMB-P1006

品 名 PART NAME: WIFI 1 Antenna L=193.0mm MHF

供方料号 SUPPLIER NO: YJS01.005.064.302

送样日期Date: 送样数量Q“TY:

客户确认CUSTOMER APPROVED BY		
APPROVAL	CHIEF	SUPERVISOR

供方确认 SUPPLIER SIGNATURE		
APPROVAL	CHECK	DESIGN
ChenGuoqiang	XieLi	ChenXingyi

YJ-RD-F04-A

add：东莞市长安镇沙头社区木鱼路59号元富工业区 Tel:0769-82586086 Fax:0769-82586086

承认书项目表

NO.	内 容（Contents）	页 数（Number of Page）	页 码（Page Code）
1	承认书封面（Spec Cover）	1	1
2	承认书项目表（Spec Item ）	1	2
3	工程成品图 （Drawing）	1	3
4	天线规格（Antenna Specification）	1	4
5	S参数测试 （S Parameter ）	1	5
6	无源测试 （Passive Test ）	2	6 ~ 7
7	方向图（Radiation Pattern ）	8	8 ~ 15
8	天线装配图（Antenna Profile）	3	16 ~ 18
9	材质证明（ Material Certificate ）	39	19 ~ 57
10	RoHS报告（ RoHS Test Report ）	**	**
11	N/A	N/A	N/A
12	-	-	-
13	-	-	-

add：东莞市长安镇沙头社区木鱼路59号元富工业区 Tel:0769-82586086 Fax:0769-82586086

RoHS Compatible

CUSTOMER	
PART NO	

REV.	DESCRIPTION	DATE
A	首次发行	2023-05-19
B	修改FPC	2023-06-21

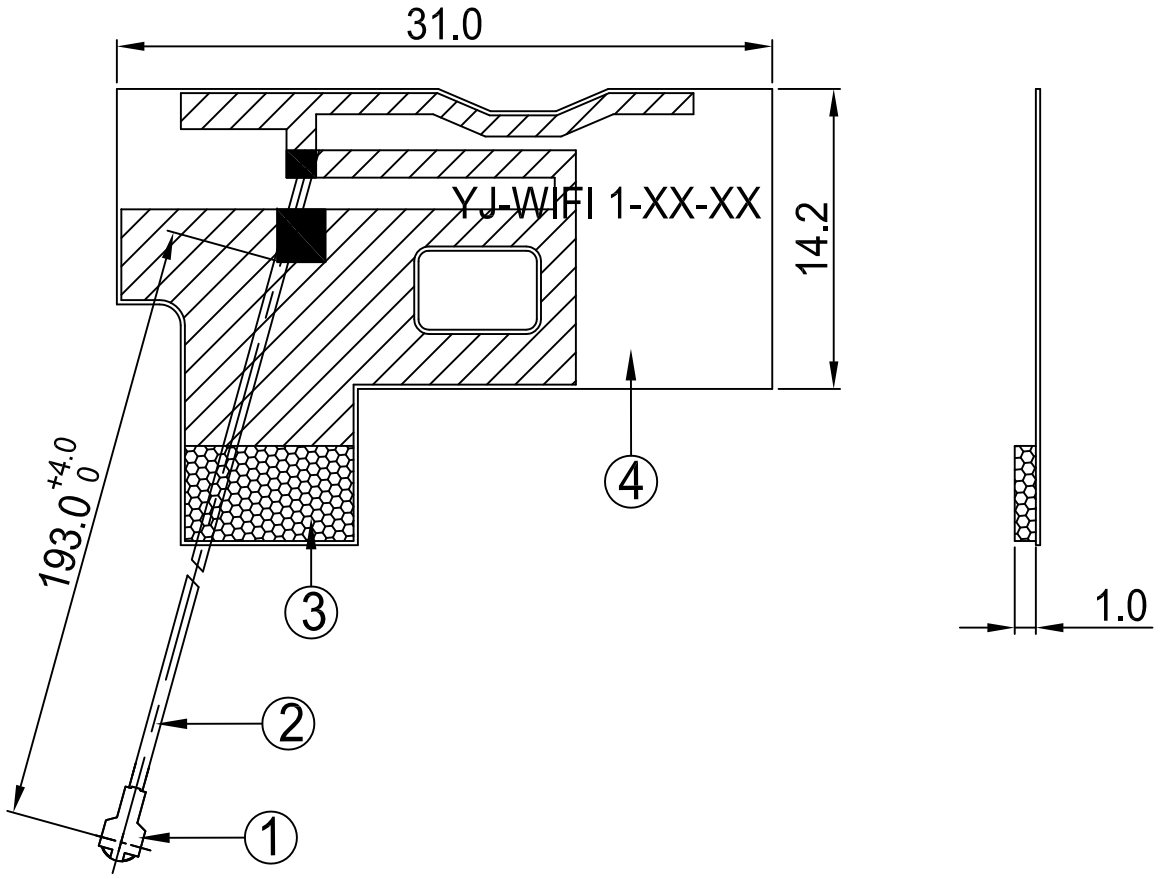

NO	PART NAME	DESCRIPTION	SUPPLIER	Material	Part Number	Q.TY
4	FPC	31.0*14.2MM	Xiao Ge	FPC	FPC10XXXA.P01	1
3	EMI Gasket	8.0*5.0*1.0MM	Heng Chang	EMI gasket	EVA10XXXA.P01	1
2	Coaxial Cable	O.D.0.81 Gray	Kai Bo	O.D.0.81	COA10XXXA.P01	1
1	Mini Connector	Au Plated 4代 原厂	Hang Yuan	Cu	TER10XXXX.P01	1

东莞市一佳电子通讯科技有限公司
Dongguan YiJia Electronics Communication Technology Co.,Ltd.
Tel :0769-82586086
Fax:0769-82586086

PART NAME: WIFI 1 Antenna L=193.0mm MHF

PART NO.: YJS01.005.064.302 DATE: 2023-06-21

APPROVED BY	CHECKED BY	DESIGNED BY	
CiCi	周棋	陈俊	UNITS: mm SCALE: 1/1 REVISION: B

Tolerance
X.X ±0.50
X.XX±0.15
X° ±3°

天线规格
Antenna Specification

Electrical Properties	
Frequency	2.4-2.5GHz 5.15-5.85GHz
Impedance	50 Ohm Nominal
V.S.W.R	2.0 Max@2.4-2.5GHz 4.0 Max@5.15-5.85GHz
Gain	4.1 dBi@2.4-2.5GHz 2.3 dBi@5.15-5.85GHz
Radiation	Omni-directional
Polarization	Linear
Physical Properties	
Connector	4代原厂IPEX
Cable Type	O.D.0.81mm
Cable Length	193mm
Cable Color	Gray
Operating Temp.	-40 ~ +85 ˚C
Storage Temp / Humidity	25±5˚C / <70%

add：东莞市长安镇沙头社区木鱼路59号元富工业区 Tel:0769-82586086 Fax:0769-82586086

Antenna Performance Test

Agilent E5071B S11 Parameter Test // WiFi1 Antenna

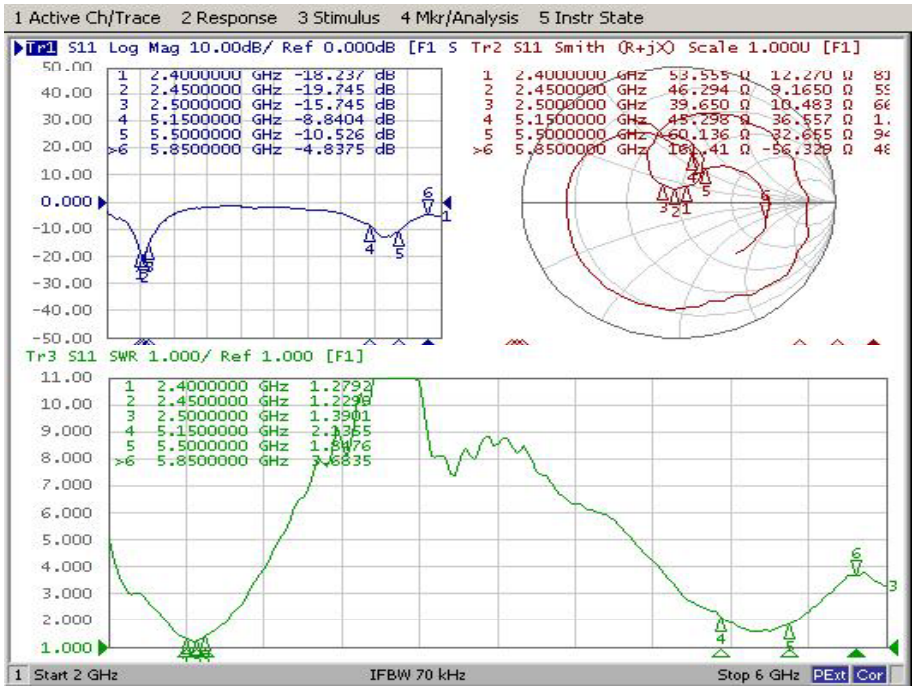

add：东莞市长安镇沙头社区木鱼路59号元富工业区 Tel:0769-82586086 Fax:0769-82586086

Passive Test For WiFi1 Antenna(2.4G)			
Freq (MHz)	Effi (%)	Effi (dB)	Gain (dBi)
2400	65.5	-1.8	3.7
2410	66.1	-1.8	3.8
2420	64.7	-1.9	3.7
2430	64.1	-1.9	3.8
2440	63.2	-2.0	3.7
2450	65.5	-1.8	3.8
2460	62.1	-2.1	3.7
2470	62.8	-2.0	3.8
2480	60.7	-2.2	3.9
2490	61.7	-2.1	4.1
2500	58.8	-2.3	4.0

add：东莞市长安镇沙头社区木鱼路59号元富工业区 Tel:0769-82586086 Fax:0769-82586086

Passive Test For WiFi1 Antenna(5.8G)			
Freq (MHz)	Effi (%)	Effi (dB)	Gain (dBi)
5150	54.1	-2.7	2.1
5200	52.1	-2.8	1.9
5250	52.2	-2.8	2.1
5300	53.5	-2.7	2.3
5350	50.7	-3.0	1.9
5400	53.2	-2.7	1.9
5450	49.8	-3.0	1.5
5500	45.2	-3.5	1.5
5550	46.9	-3.3	1.7
5600	40.9	-3.9	1.2
5650	36.2	-4.4	1.3
5700	37.0	-4.3	1.8
5750	33.1	-4.8	1.4
5800	31.2	-5.1	1.3
5850	35.0	-4.6	1.8

add：东莞市长安镇沙头社区木鱼路59号元富工业区 Tel:0769-82586086 Fax:0769-82586086

Radiation Pattern For WiFi1 Antenna（2400MHz）

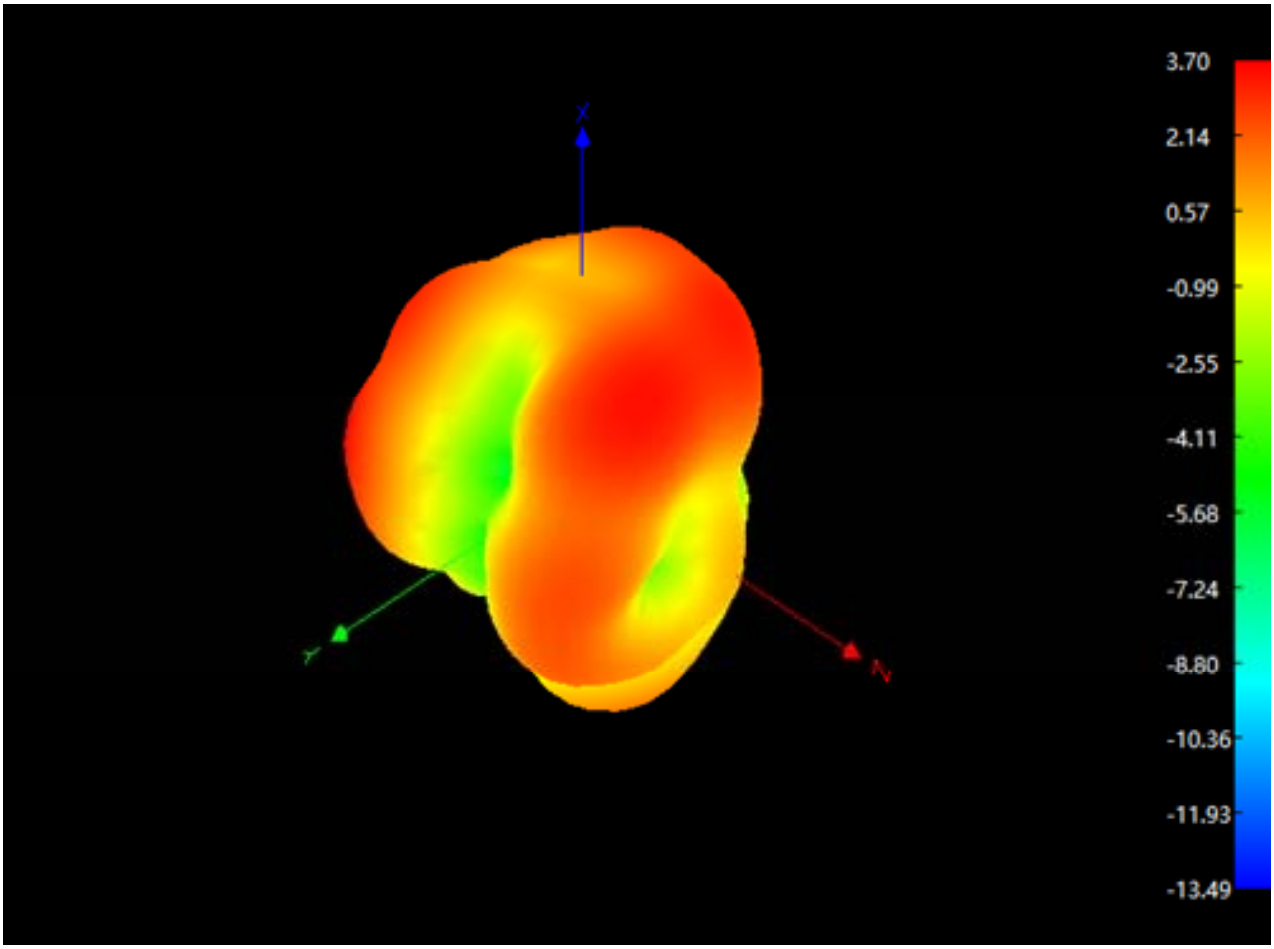

add：东莞市长安镇沙头社区木鱼路59号元富工业区 Tel:0769-82586086 Fax:0769-82586086

Radiation Pattern For WiFi1 Antenna（2450MHz）

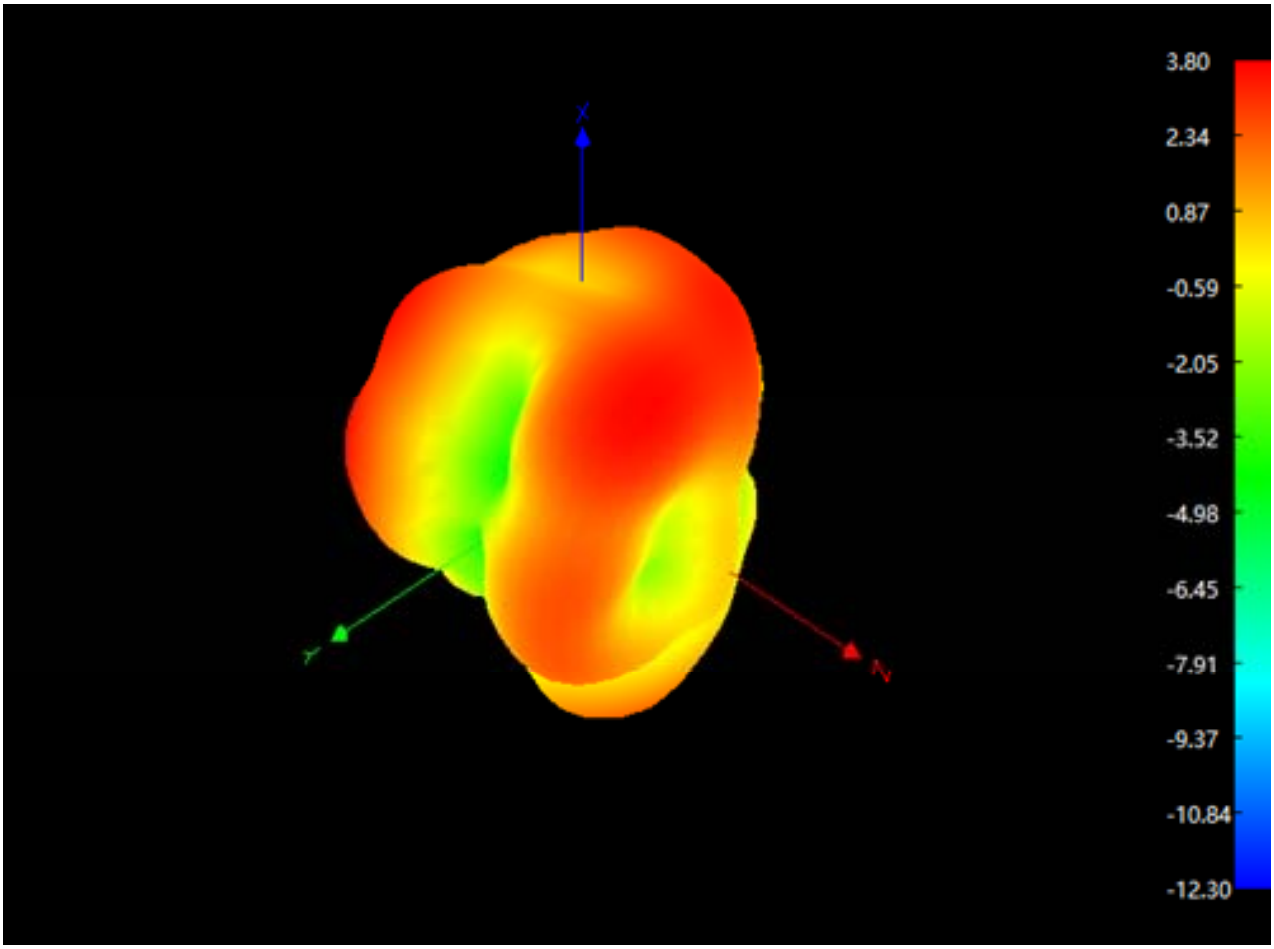

add：东莞市长安镇沙头社区木鱼路59号元富工业区 Tel:0769-82586086 Fax:0769-82586086

Radiation Pattern For WiFi1 Antenna（2500MHz）

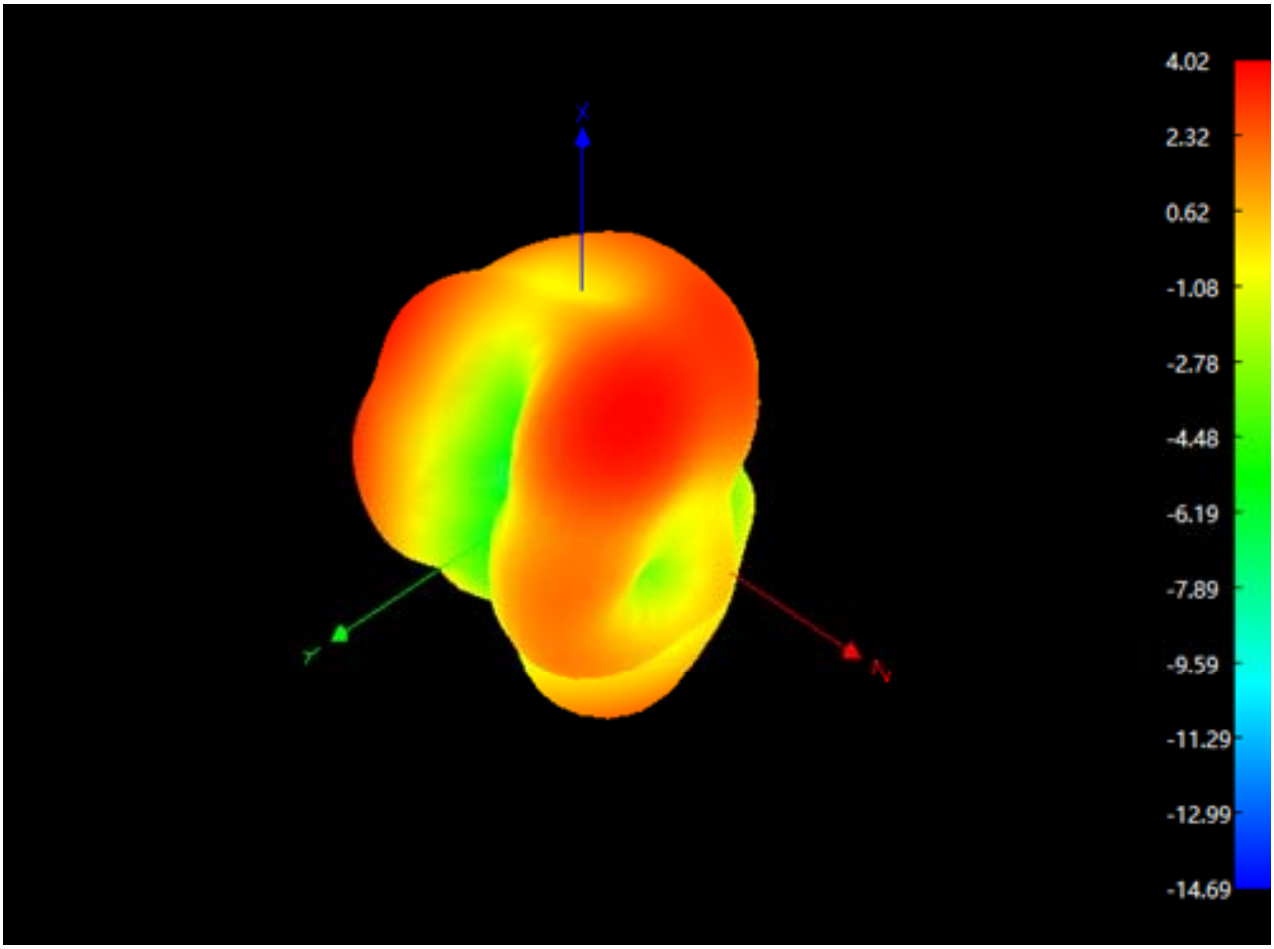

add：东莞市长安镇沙头社区木鱼路59号元富工业区 Tel:0769-82586086 Fax:0769-82586086

Radiation Pattern For WiFi1 Antenna

Phi 0°

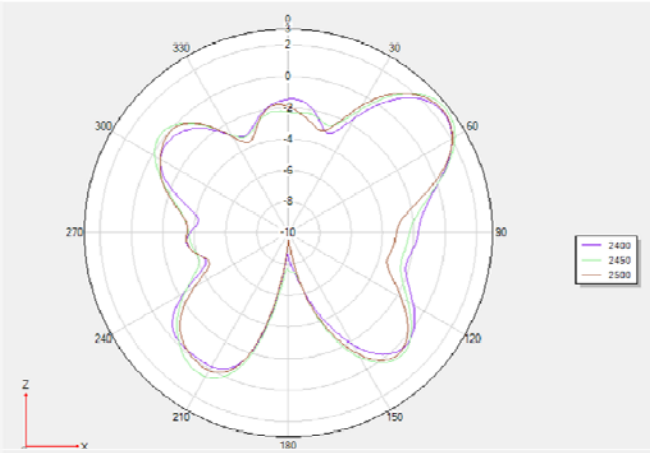

Phi 90°

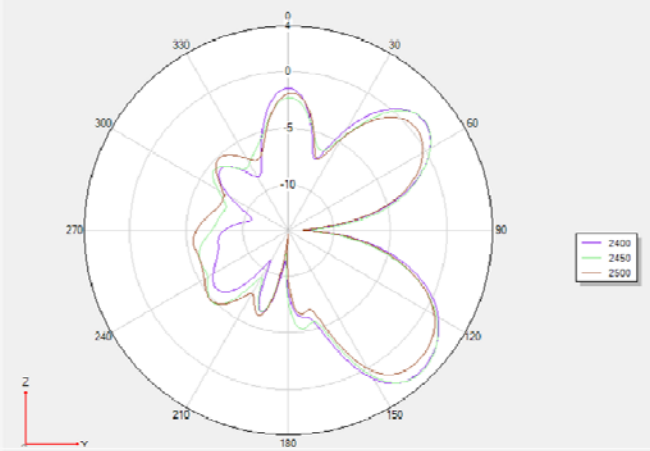

Theta 90°

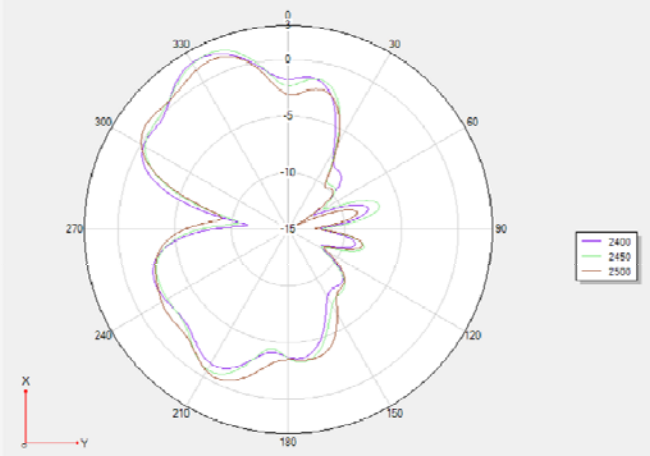

add：东莞市长安镇沙头社区木鱼路59号元富工业区 Tel:0769-82586086 Fax:0769-82586086

Radiation Pattern For WiFi1 Antenna（5150MHz）

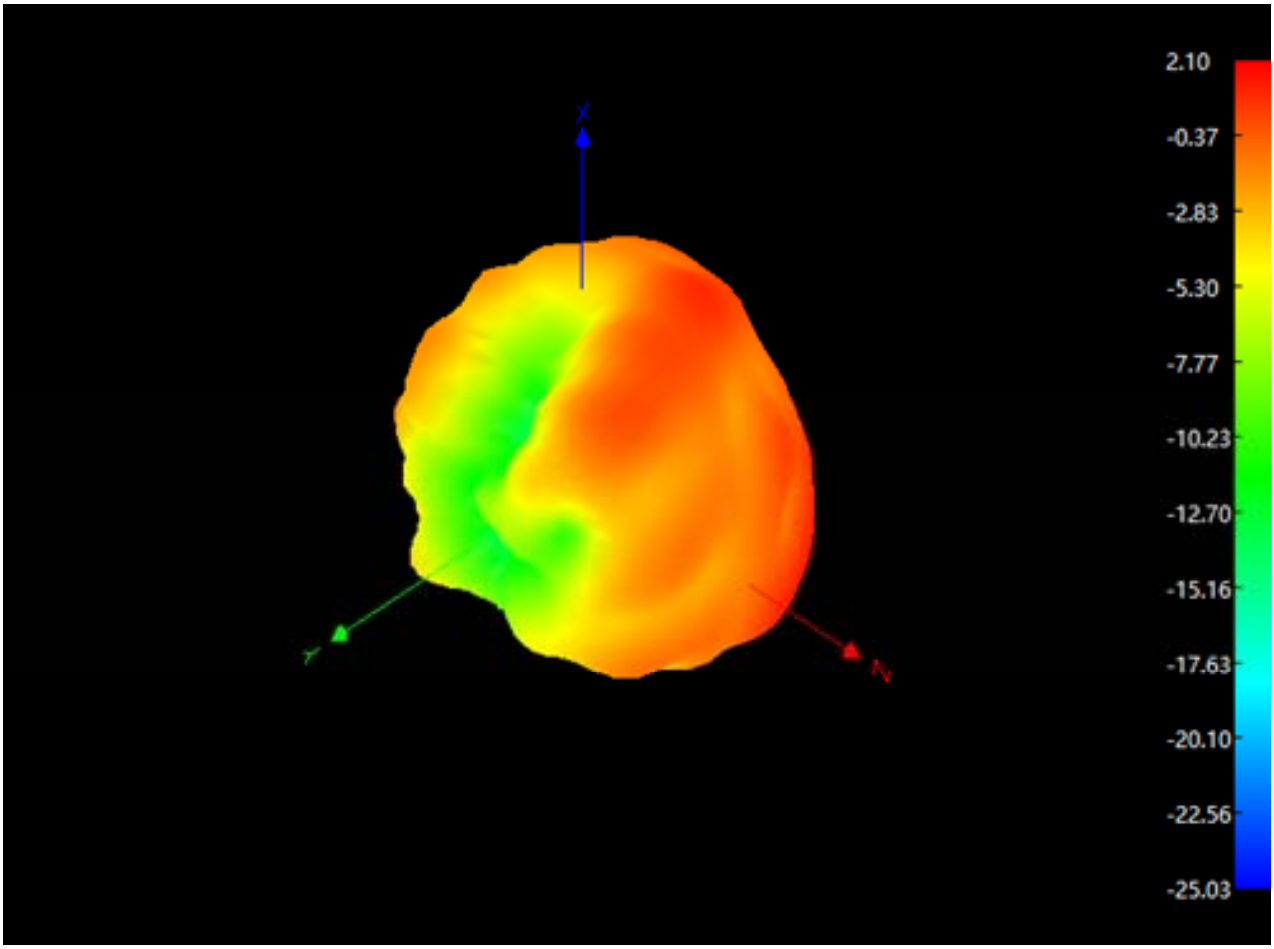

add：东莞市长安镇沙头社区木鱼路59号元富工业区 Tel:0769-82586086 Fax:0769-82586086

Radiation Pattern For WiFi1 Antenna（5500MHz）

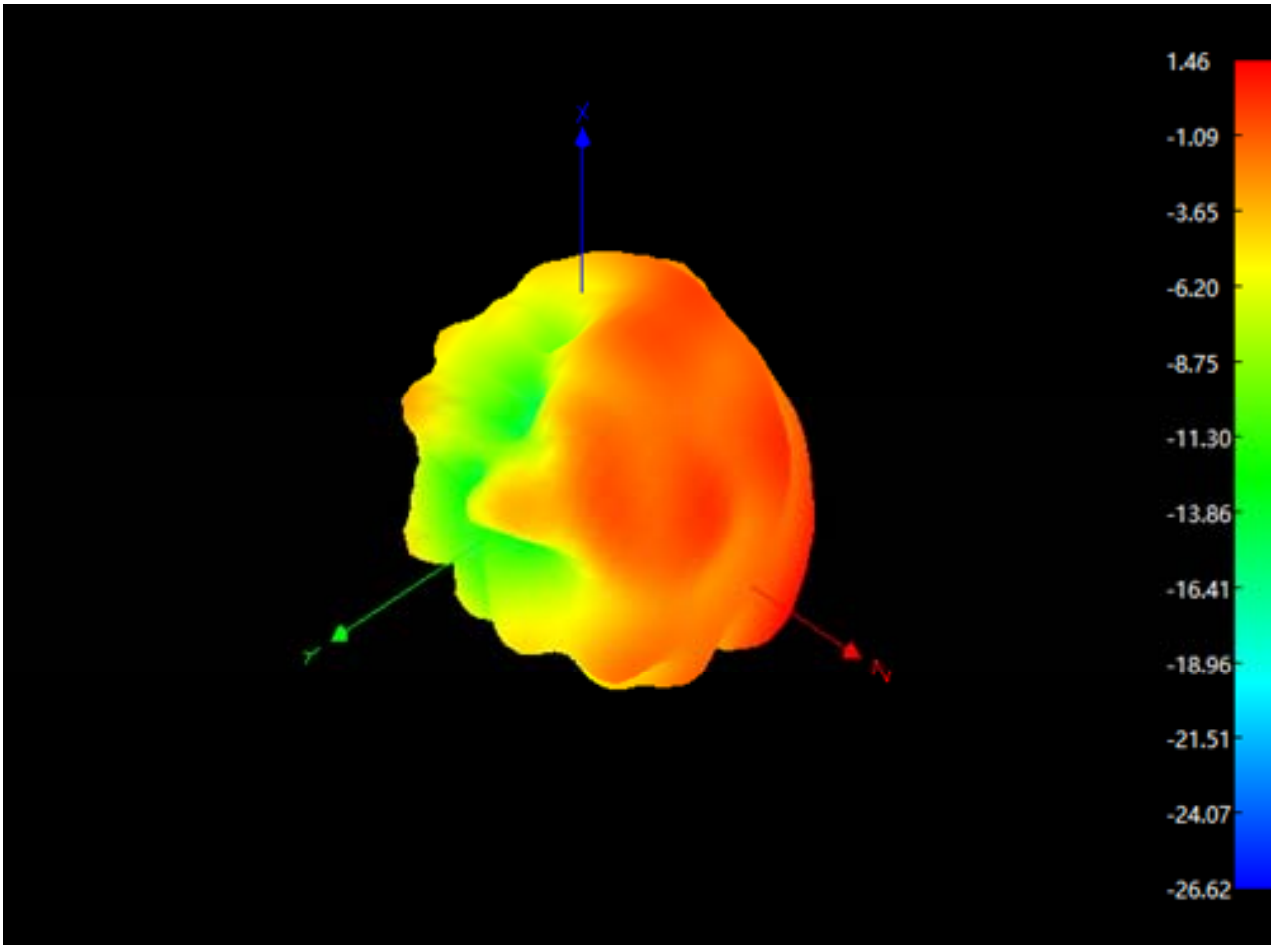

add：东莞市长安镇沙头社区木鱼路59号元富工业区 Tel:0769-82586086 Fax:0769-82586086

Radiation Pattern For WiFi1 Antenna（5850MHz）

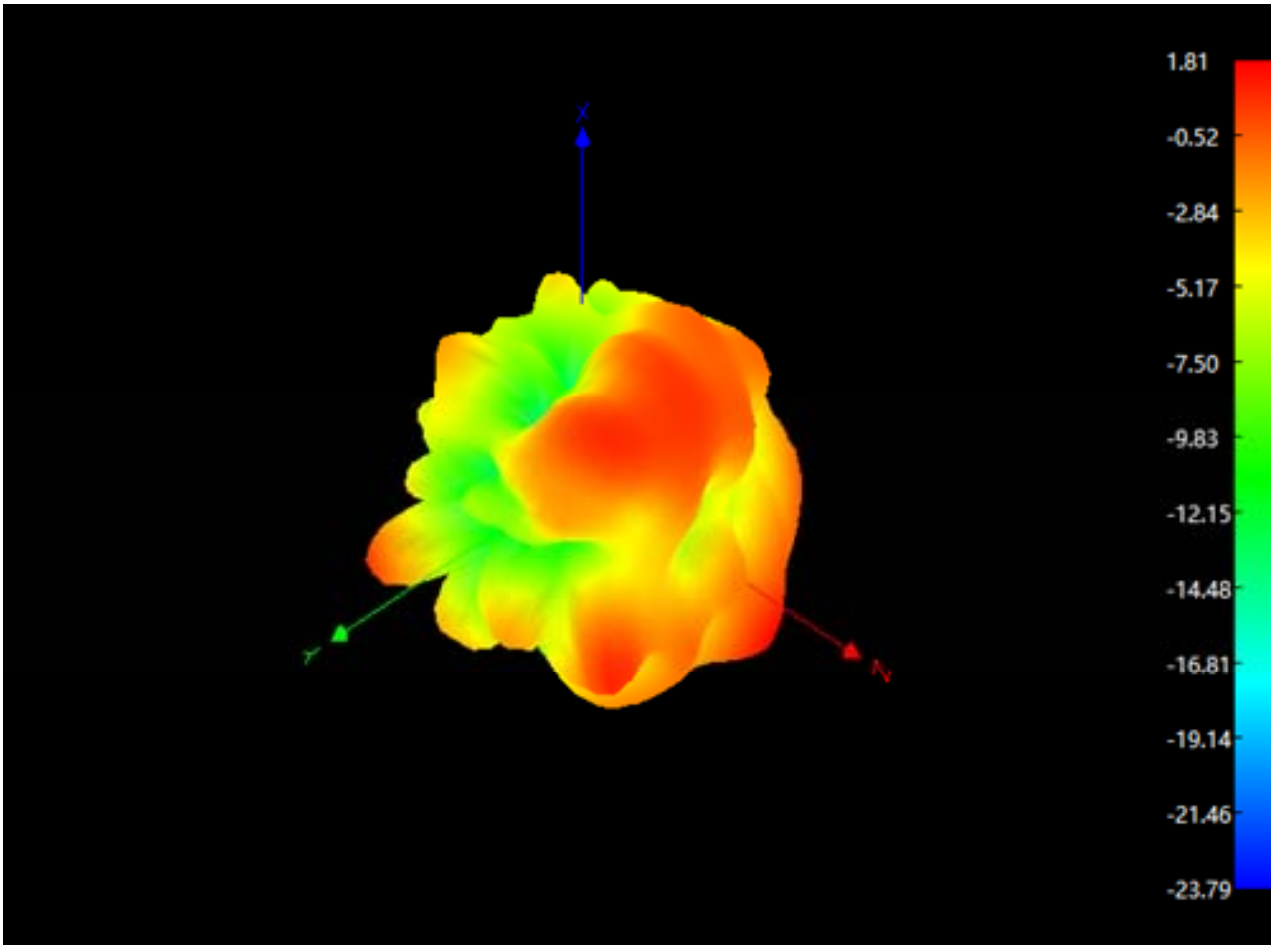

add：东莞市长安镇沙头社区木鱼路59号元富工业区 Tel:0769-82586086 Fax:0769-82586086

Radiation Pattern For WiFi1 Antenna

Phi 0°

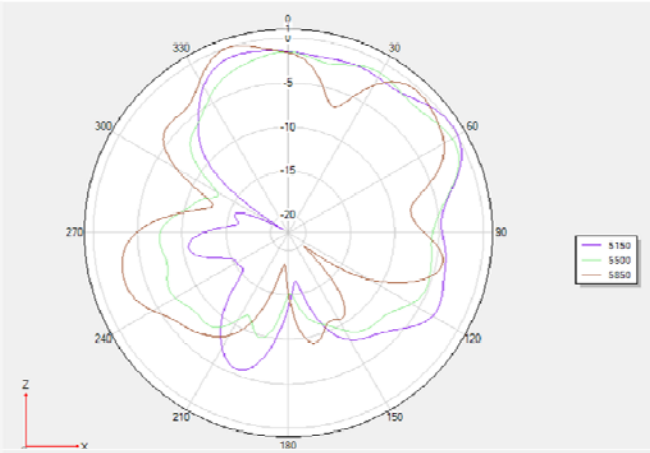

Phi 90°

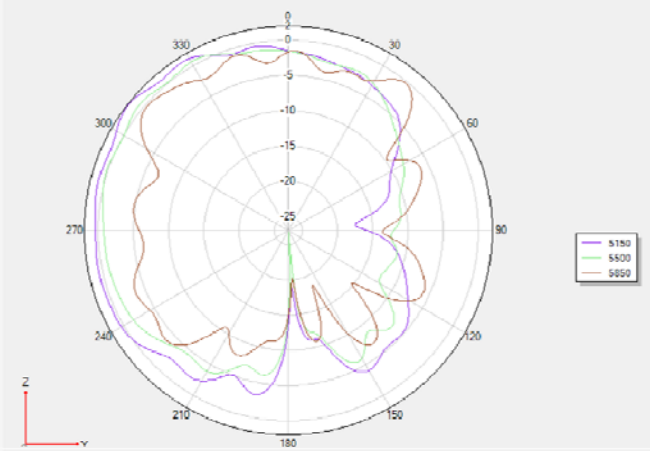

Theta 90°

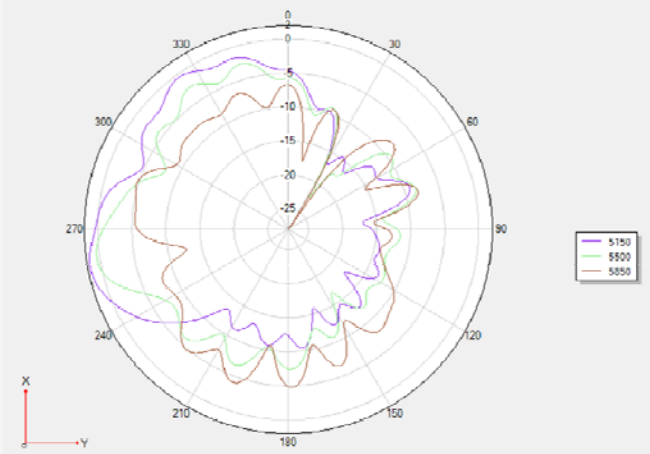

add：东莞市长安镇沙头社区木鱼路59号元富工业区 Tel:0769-82586086 Fax:0769-82586086

Device	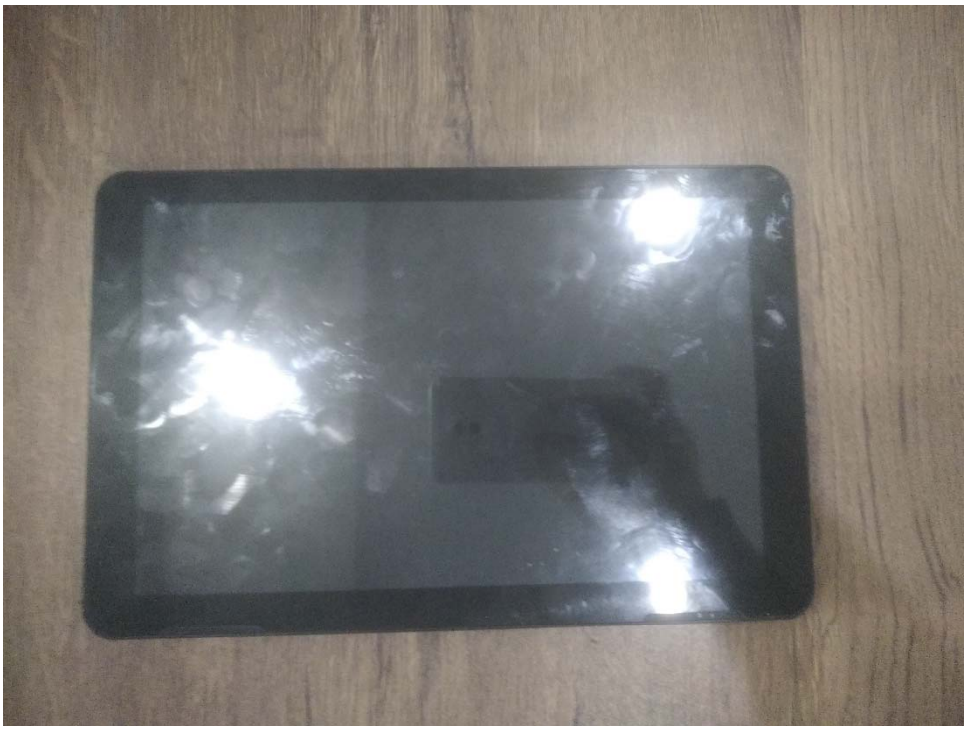

add：东莞市长安镇沙头社区木鱼路59号元富工业区 Tel:0769-82586086 Fax:0769-82586086

WiFi1 Antenna	

add：东莞市长安镇沙头社区木鱼路59号元富工业区 Tel:0769-82586086 Fax:0769-82586086

add：东莞市长安镇沙头社区木鱼路59号元富工业区 Tel:0769-82586086 Fax:0769-82586086

Material safety data (MSDS)

1、 Item and manufacturer information page: 1 / 2

Item name: FPC antenna electroplated nickel and gold (flexible printed circuit)
Other names: FPC nickel gold coating
Recommended use and restricted use: communication products
Name of manufacturer or supplier: Dongguan Xiaoge Electronic Technology Co., Ltd
Address of manufacturer or supplier: 1 / 2 / F, Sanxing Road, Fenghuang Middle Road, Shajiao community, Humen Town, Dongguan City
Emergency contact / Fax:

2、 Hazard identification data

Hazard classification: other dangerous substances, acute toxic substances, grade 4 (swallowing, skin, inhalation)
Label content: Symbols: other dangerous objects, exclamation marks Warning: warning Hazard warning message: harmful if swallowed, harmful if inhaled Hazard prevention measures: put the container in a well ventilated place; avoid contact with skin and eyes; in case of accident or discomfort, consult medical treatment immediately
Other hazards:-

3、 Component identification data

mixture

Chinese and English Name: nickel CAS no.7440-02-0 percentage 98.95% Gold CAS no.7440-57-5 percentage 1% Brightener CAS no.6155-57-3 percentage 0.05%
Synonymous Name: gold finger nickel gold layer
Case No
Composition of hazardous substances (percentage of components)

4、 First aid measures

First aid methods for different exposure routes: Inhalation: - irritates respiratory tract Skin contact: wash the contact area with soap and water Eye contact: flush with plenty of water for more than 15 minutes and seek medical assistance Ingestion: drink plenty of water and seek medical assistance
The most important symptom and harmful effect: irritant.
Protection of first-aid personnel: wear class C protective equipment to implement first aid in safe area
Tips for doctors: patients should be given oxygen when inhaled.When swallowing, consider gastric lavage.

5、 Fire fighting measures

Suitable extinguishing agent: Carbon dioxide, chemical powder, water mist, alcohol foam.
Special hazards that may be encountered during fire fighting: When heated to dry, the salt will decompose to produce carbon monoxide and carbon dioxide.
Special fire fighting procedures: 1.Spray water mist to cool containers exposed to fire.2. Spray water to wash away the leakage to avoid exposure.
Special protective equipment for fire fighters: If necessary, wear a full body chemical protective respirator

6、 Physical and chemical properties page: 2 / 2

	State of matter	colour	smell	proportion	melting point	boiling point
NI	solid state	silvery white	tasteless	8.9	1453Temperature	2732Temperature
AU	solid state	yellow	tasteless	19.3	1064Temperature	2807Temperature
Brightener	liquid state	Light brown	tasteless	1.1	NA	NA

7、Safe handling and storage methods

management: Avoid contact with eyes, skin and clothing, wear personal protective equipment and do not inhale mist
Storage: Store in a cool, dry place

8、 Waste disposal methods

Waste disposal method: 1.According to the current laws and regulations. 2.According to the manufacturer's treatment, the waste to be treated should be treated first 3.In accordance with the relevant national and local government industrial wastewater discharge standards

9、 Leakage treatment method

Personal precautions: wear appropriate personal protective equipment.
Environmental precautions: ventilate the leakage area.

Cleaning method: dilute with a large amount of clean water, and wash and discharge to the ditch.

10、 Exposure precautions

Engineering control: 1. Local exhaust device; 2. Overall air exchange device; 3. The ventilation system should be made of corrosion-resistant materials and separated from other exhaust systems.

Control parameters			
Eight hour daily average Allowable concentration TWA	Short time volume average Allowable concentration STEL	Maximum permissible concentration CEILING	Biological indicators BEIs
1mg/m3	2mg/m3	-	-

Personal protective equipment:
Respiratory protection:-
Hand protection: impervious gloves made of natural rubber, butyl rubber and polyvinyl alcohol.
Eye protection: chemical safety goggles, face mask.
Skin and body protection: impermeable clothes and work shoes made of the above rubber materials

Health measures:
1.Take off contaminated clothes as soon as possible after work, and wash them before wearing or discarding them. Moreover, the laundry staff should be informed of the hazards of pollutants
2.Smoking or eating is strictly prohibited in the workplace.3. Wash hands thoroughly after handling.4. Keep the workplace clean

11、 Stability and reactivity

Stability:
It is stable under normal condition. If heated to the melting point, sublimation and decomposition may occur.

Possible hazardous reactions under special conditions:
1.Alkali: may react violently, producing heat and pressure.2. Oxidant (such as sodium chlorite, sodium hypochlorite): may produce violent or explosive reaction.3. Silver: may travel explosive silver oxalate.4. Alkali metals (such as sodium or potassium): may react violently to produce flammable hydrogen.5. Iron and ferrites (such as iron oxide): may react rapidly to form ferric oxalate.6. Acyl chloride: may react violently to form toxic fumigation.7. Heating

Conditions to avoid: heat

Substances to avoid:
1.Alkali.2. Oxidant 6. Acid

Hazardous decomposition products: None

12、 Toxicity information

Exposure route:-

Symptoms:-

Acute toxicity: none
Inhalation: None
Skin: no irritation
Eyes: no irritation
Ingestion: no burning sensation, abdominal pain, nausea, vomiting in the mouth and throat

Chronic toxicity or long-term toxicity:
1.May cause kidney stone, dysuria and pain.2. It may cause weight loss and chronic upper respiratory tract inflammation.3. It can cause local skin pain, ulceration or necrosis and nail discoloration.

13、 Ecological information

Biological toxicity: LC50 (FISH)-
EC50 (aquatic invertebrates)-
Bioconcentration coefficient:-

Persistence and degradation:-

Bioaccumulation: it is not likely to decompose in the body, and most of it will be discharged from the urine in the form of oxalic acid or calcium oxalate. This insoluble salt will accumulate in the body like a stone, causing kidney and urethral stones.

Mobility in soil: when released into soil, it may seep into groundwater and biodegrade.

Other adverse effects:-

14、 Delivery information

UN number: - un1760corrosive life

UN transport Name:-

Transport hazard classification: category 9 other hazardous substances

Packing category:-

Marine pollutants (yes / no): no

Special transportation methods and precautions:-

15、 Regulatory information

Applicable regulations:
1.Rules for labor safety and health facilities.
2.General rules of dangerous and harmful substances.
3.The allowable concentration standard of harmful substances in the air of labor working environment.
4.Road traffic safety rules.
5.Methods and facilities standards for storage, removal and disposal of industrial wastes.

16、 Other data

reference	MSDS database
Tabulator unit	Name: Dongguan Xiaoge Electronic Technology Co., Ltd

	Address / Tel: 1 / 2 / F, beside Sanxing Road, Fenghuang Middle Road, Shajiao community, Humen Town, Dongguan City	
Tabulator	Title: quality controller	Name (seal): Huang Huanwen
Date of tabulation	2020-12-01	
remarks	The symbol "-" in the above data indicates that there is no relevant data at present, while the symbol / "indicates that this field is not applicable to the substance	

， 安 全 資 料 表

版權 2021-01-10

First, chemical products and materials for business

Chemical name: PSM-800FSDM-A/SMH-800 liquid solid plate ink
Other names:
Use and restricted use of construction: flexible printed circuit board (PI/Cu), hand machine roof board
Name, address and address of the creator, entrant or supplier: Creator: Yueli Reachability Co., Ltd. Address: No.22 Jingjian Fourth Road, Guanyin District, Taoyuan City: 886-3-4836651
Urgent/true: 886-3-4836651, true: 886-3-4837487

Second, the hazard identification of resources and materials

Hazard classification of chemical products:
Health and environmental hazards: Acute toxicity (swallowing) 4, rot/skin irritation 2, heavy weight/eye irritation 2, skin Pass sensitive substance first, carcinogenic substance second, and hazardous substance second (acute toxicity).
Indication of content: Symbol number: Warning language: Warning hazard warning interest: Harmful to swallow Cause skin irritation Causing severe eye irritation may cause skin hypersensitivity and suspected carcinogenesis Toxic to aquatic organisms Hazard prevention measures: Put the container in a place with good ventilation far away from the high temperature Do not eat or drink when using Remove the blindfold/face mask immediately when your clothes are contaminated If you touch your eyes, wash them with plenty of water immediately, and then ask the mud to wear suitable gloves Do not inhale gas/gas/steam gas/gas before use Place it in the upper lock Do not place until you know all safety precautions Avoid releasing release in the environment
Other hazards:-

III. Composition identification of PSM-800FSDM-A/SMH-800

capital mixture:

Liquid solid plate ink PSM-800FSDM-A/SMH-800		
Chemical geology:		
Chinese and English names of hazardous components	Register number of Chemical Digest Service (CAS No.)	Degree or degree (percentage of components)
Oxygen acrylate oligmer Epoxy acrylate oligmer	28064-14-4	50%
Silicon dioxide Fused silica	7631-86-9	13%
Aromatic solution	64742-94-5	4%

Methyl dipropylene glycol	34590-94-8	4%
Carbon black	1333-86-4	3.5%
BaSO4 sulfate	13462-86-7	24%
Photoinitiator and the others	5495-84-1	1.5%

Fourth, first aid measures

First aid methods for the same road:

Inhalation: 1. Take self-protection measures before rescue.

2. Remove pollution sources or move patients to new places.

3. If a patient stops breathing, artificial respiration should be given immediately by the person who has been adalmed. If the heart stops, cardiopulmonary resuscitation should be given. When the patient inhales and swallows toxic substances, mouth-to-mouth artificial respiration should be used directly, and pocket masks and other medical equipment should be used for artificial respiration.

4. Maintain the patient's safety and normal temperature. 6. Treat the cure quickly.

Pi Mo: Wash the contaminated area with harmonious water for at least 20 minutes, and remove contaminated clothes, shoes and leather products before water. Eye touching: Immediately open the eyelids and wash the contaminated eyes with water for at least 20 minutes, and immediately take care of them.

Intake: 1. If the patient will be frustrated, or has been frustrated, he can feed anything.

2. It can induce vomiting and give 240-300ml of water.

3. If you vomit spontaneously, rinse your mouth and supply water repeatedly.

The most important diseases and harmful effects:-

Protection against first aid workers:-

Tips for doctors:-

V. Fire measures

Suitable for fire: chemical dry powder, wine foam, carbon dioxide, water, fire: water, water, foam water.

Special hazards that may be encountered during fire;

1. Its steam gas and decomposition products are burning and toxic.
2. Its steam gas is heavier than its empty gas, and it can spread to distant fire sources and give birth to tempering.
3. The combination of steam and big gas may lead to explosion.
4. When this object is indoors, outdoors or in sewers, it is in danger of steam explosion.

Special Fire Procedure:

1. In a safe distance from the place of fire, keep in the upwind position.
2. You can use water containers to disperse steam gas to wash the leakage and sparse the leakage, so as to protect the rescue staff.
3. Water in the flame of the container around, so that the container is cold, until the fire is cold. Keep the bottom of the container safe.
4. Poker or move all ignition sources.

Special protection of firefighters: Firefighters must wear air respirators, fire clothing and protection gloves.

VI. Leakage and management methods

Things people should pay attention to:

1. Restrict personnel from entering until the spillover area is completely cleaned up.
2. The work of cleaning up by the person who is negated.
3. Wear appropriate civil air defense.

Attention to matters in the environment:

1. Remove the ignition source.
2. Maintain ventilation in the leakage area.
3. Be in the upper wind and avoid going into the lower place.
4. Remove or separate burning and combustible materials under conditions that endanger the safety of people.
5. At least 100 to 200 meters away from the pollution source.

Cleaning method:

1. You can touch the leaked materials.

2. Avoid leakage entering sewers or dense spaces.
3. Where safety permits, prevent or reduce spills.
4. Block the leakage with soil, sand or similar and combustible objects that will respond to the leakage.
5. When there is a small amount of spill, it should be absorbed by the reaction with the leakage. Contaminated absorbed and discharged materials have the same model
6. Harmfulness must be placed in the appropriate container that is covered and indicated. Wash the spill area with water.
7. When there is a large amount of spill: fire fighting, emergency management and business response to seek help.

VII. Safe Location and Storage Methods

Place:
1. It is stored in a place where it is dry and ventilated, and avoids direct light and ignition source.
2. Far away things such as strong oxides, strong acids and water.
3. Use grounding, use the device without spark, and ventilate the wind system.
4. Store a small amount in the refrigerator, and use the explosion-proof refrigerator.
5. Department of police reports leaked outside the city.
6. It is necessary to separate the storage area from the work area, restrict people from entering and leaving the storage area, and show warnings.
7. Avoid collision, and the nearest fire system.
8. You can work alone, and another person needs to be on standby for rescue.
9. In the work area, use the containers that can be used to burn the liquid body, and all the barrels and slots should be grounded, and the containers must be connected to each other.
10. Use the smallest possible amount, and use a suitable ventilation system in the designated area.
11. The target indication container should be covered when in use.

Storage:
1. It is stored in a place where it is dry and ventilated, and avoids direct light and ignition source.
2. Store a small amount in the refrigerator, and use the explosion-proof refrigerator.
3. It is necessary to separate the storage area from the work area, restrict people from entering and leaving the storage area, and show warnings.
4. The target indication container should be covered when in use.

Eight, the preventive measures

Engineering control:
1. The wind system of the single use of the step to generate sparks and grounding.
2. The discharge port leads directly to the outside, and the important measures for protection are taken.
3. When using this object in large quantities, it may be necessary to install local gas and process dense.
4. Supply fully new and fresh air gas to supplement the air gas drawn out by filling and discharging the air gas system.

Control number:-
Average capacitance of eight small hours/average capacitance of short hours/maximum capacitance:-
Biological fingerprint:-

Civil air defense:

:: Breathing protection: 1. Chemical materials containing machine vapor poison cans or self-made breathing protection equipment.

2. Constant quantity type gas supply type breathing protection device, animation type breathing protection device containing machine steamed gas pot, mask containing machine steamed gas pot, comprehensive self-galvanizing breathing protection device, comprehensive gas supply type breathing protection device, and comprehensive chemical school poison breathing protection device containing machine steam poison pot. 3. Positive full-blown breathing protection equipment or positive full-blown gas-supplied breathing protection equipment with auxiliary positive self-blown breathing protection equipment.

4. There is a mask for steaming gas canister, and an escape type self-breathing protection tool.

Hand protection: Butyl rubber is the best, chlorinated polyethylene, polyvinyl acid, fluorinated cortex, butyl rubber/chloroprene rubber, fluorinated rubber, chloroprene rubber/natural rubber galaxy cover, fluorinated cortex/chloroprene rubber are also good anti-scorching gloves.

Eye protection: 1. Anti-chemical safety eye protection.

2. Full cover.

3. Don't wear shaped eyes.

1. Work shoes and body clothes.

2. There should be a bath/wash in the work area.

The measures for living:

1. Remove contaminated clothes quickly after work, and then wear them after washing them.

2. The work place is forbidden to smoke cigarettes or eat. 3. After taking care of this thing, you must wash your hands. 4. Keep the property clean.

IX. Physical and Chemical Geology

Outside (physical state, color, etc.): black cream	Gas flavor: bad smell
Olfactory value:-	Melting level:-25 ℃
PH value:-	Boiling/boiling: 218-219 ℃
Combustibility (solid and gas):-	Fire: > 75 ℃
Decomposition temperature:-	The method of wearing a cup: () carrying a cup (V) wearing a cup
Spontaneous combustion temperature: spontaneous combustion	Explosion boundary:-
Steaming gas:-	Steaming density: 6.07
Density: 1.24 ~ 1.26 (water = 1)	Solubility: Slightly soluble in water
Octanol/water partition number (log Kow):-	Dispersion rate:-

X. Stability and Reaction

Stability: Stability under sealed dry container.
Possible hazard response under special conditions:-
Types to be avoided: leakage, flame and other ignition sources.
Things to avoid: acid, oxidation
Hazardous decomposition: carbon monoxide

XI. Toxic Materials

The road: leather, inhalation, eyes, food
Symptoms: irritation, drowsiness, dizziness, tiredness, pain, nausea, difficulty breathing and
Acute toxicity: Inhalation: 1. Steaming gas will irritate nose, throat and lungs. Pi Fou: 1. Liquid body or solution will cause heavy irritation and burning pain. 2. Steaming gas can cause irritation. 3. After being picked up by the skin, the liquid will be absorbed to the poisoned amount. Eyes: 1. Steaming gas will irritate eyes and stimulate them. 2. Liquid body will cause heavy burning and injury to eyes. Intake: 1. It will cause bright local irritation to the mouth and digestive tract.
Chronic toxicity or long-term toxicity:-

Twelve, raw materials

Raw toxicity:-
Persistence and degradation: Avoid entering the water source inlet and waterway, which is harmful to aquatic organisms.
Bioaccumulability:-
Reactionality in soil:-
Other good effects:-

XIII. Methods of abandoning and abandoning places

Discarding method: 1. Examining the principle of phase method. 2. According to the pieces of the store to be disposed of waste materials. 3. Specific incineration or burial can be used.

Fourteen, Dictate to send materials

Lian He Guo Bian No.:-

版權 2021-01-10

The name of the joint country is:-
Classification of the hazards of Dirk: It is judged as ordinary goods according to Fujian Commercial Report 0128227
Packaging and fitting: It can be arranged according to ordinary goods
Marine pollutants (yes/no): no
Special delivery methods and precautions:-

XV. French Materials

Suitable usage: 1. If you work safely, you will be able to apply it 2. Road traffic safety rules 3. Methods and standards for the storage and removal of waste materials 4. Harmful academic products and general knowledge 5. What you can do in your work, what you can do, and what you can do

XVI. Other materials

Take part in the text	1. RTECS Materials, TOMES PLUS CD-ROM, Vol. 41, 1999 2. HSDB Materials, TOMES PLUS CD-ROM, Vol. 41, 1999	
Superficial site	Mingjia: Youli Lian Lian Co., Ltd.	
	Address/: No.22, Jingjian Fourth Road, Guanyin District, Taoyuan City: 886-3-4836651	
Table person	Calling for: the principle of science and technology	Name (Seal): Huang Zhihui
Table date	2021.01 1.10	
Per	Among the above-mentioned materials, "-" means that there is no related materials at present, while the symbol number "/" means that this person is compatible with the material and is suitable for use	

The above-mentioned materials are provided by our company, which is correct for the above-mentioned materials, but it is still difficult to avoid them. The materials and materials of each project are only for reference, and users should judge their availability according to their corresponding needs.

JIU JIANG
Flex Co., Ltd
1210 Qianjin Road(E), Jiujiang Jiangxi,China 332006
Tel: 86-792-8358899, Fax: 86-792-8355803

MATERIAL SAFETY DATA SHEET

SECTION 1 PRODUCT AND COMPANY IDENTIFICATION

1.1 Material Name: Flexible Copper-Clad Polyimide Laminates
1.2 Part Number: LPI-HF
1.3 Use of Material: Printed Circuit Boards
1.4 Date of Prepared: April 22nd, 2021
1.5 Company Identification: Jiu Jiang Flex Co., Ltd.
1210Qianjin Road (E) Jiujiang, Jiangxi, China 332006
1.6 Emergency Telephone Number: 86-792-8358899
1.7 Telephone Number for Information: 86-792-8358899, 8355813

SECTION 2 COMPOSITION/INFORMATION ON INGREDIENTS

Composition / substance		CAS#	%
PI	polyimide	25038-81-7	2.93~28.11
Adhesive	Epoxy resin	25036-25-3	2.42~6.81
	Flame Retardant (additive type)	225789-38-8	0.49~1.36
	Rubber	9003-18-3	1.45~3.99
Copper foil	Copper	7440-50-8	92.66~59.72

SECTION 3 HAZARDOUS IDENTIFICATION

Dust, soot, combustion gases produced when burning, of inhaled, ingested or absorbed through skin it will be harmful or irritating to the eyes, skin, mucous membrane, respiratory system, allergies can be caused to skin, flammable irritating and sensitive.

SECTION 4 FIRST-AID MEASURES (on Dust)

Inhalation:
Remove to fresh air. Obtain medical attention if symptoms persist.

Eye Contact:
Flush immediately with large amounts of water. Do not rub eyes. Obtain medical attention if symptoms persist.

Skin Contact:
Wash area of contact thoroughly with soap and water. Do not rub or scratch. Obtain medical attention if symptoms persist.

Ingestion: Drinking water as much as possible, emetic, and see doctor.

1210 Qianjin Road(E), Jiujiang Jiangxi,China 332006
Tel: 86-792-8358899, Fax: 86-792-8355803

SECTION 5 FIRE FIGHTING MEASURES

Extinguishing Agents

Following extinguishing media can be used:
Carbon dioxide extinguisher
Dry powder fire extinguisher
Water Pump
Foam fire extinguisher

Hazards of Unusual burning and Explosion:

The material produces carbon monoxide, carbon dioxide, nitrogen, oxides of nitrogen, smoke and dust when extremely high temperature or burning.

Personal Protective Equipment

As in any burning, wear self-contained breathing apparatus and full protective gear.

Upper limit of Flammability: not ascertained

SECTION 6 EMERGENCY HANDLING OF LEAKAGE

Emergency handling:

Block the leakage area to avoid dust flying and wear protective equipment, use vacuum cleaner to clean the leakage.

SECTION 7 HANDLING AND STORAGE

Handling: Wear cotton gloves to protect product damage and hand lacerated.

Storage conditions

The material should be stored in dry, ambient temperature wrapped with PE film.

Environment: Keep away from heat, ignition sources, and direct sunlight.

Other conditions: Keep cartons tightly closed when not in use.

SECTION 8 EXPOSURE CONTROLS / PERSONAL PROTECTION

Respiratory protection:

No general requirements. If the occurrence of dust, gas or smoke processing or processing, is stimulating to employees, to use NIOSH/MSHA approved respiratory protection measures. Engineering control should be excluded from the need for respiratory support.

Ventilation:

Once air exhaust exposure exceeds limits, or visible smoke, dust, exhaust gas, the ventilation at site should be accompanied by all the heat process at the same time.

Mechanical operations:

Optimize and follow good industrial operation as possible as you can.

Eye Contact:

With eye-glasses on during all process

SECTION 9 PHYSICAL AND CHEMICAL PROPERTIES

Appearance	PI film Copper-Clad Laminate with adhesive
Physical State:	solid
PH:	Not Applicable
Melting point:	no data
Relative density (water =1):	more than 1
Boiling point:	no data
The relative vapor density (air =1):	more than 1
Saturated vapor pressure (kPa):	Not Applicable
Heat of combustion (kJ/mol):	no data
The critical temperature (c):	Not Applicable
The critical pressure (MPa):	Not Applicable
The octanol / water partition coefficient of numerical:	Not Applicable
Flash point（℃):	Not Applicable
Upper explosive limit% (V/V):	Not Applicable
Ignition temperature (c):	no data
The lower limit of explosion% (V/V):	Not Applicable
Solubility:	insoluble
Application:	used for making printed circuit board

SECTION 10 STABILITY AND REACTIVITY

Stability:

Storage for one year at 5℃ to 30℃ and RH less than 75%

Conditions to Avoid:

High Humidity, direct sunlight,

The copper side may have violent reaction with followings:

Acetylene, ammonium nitrate, bromide, chlorate, iodic acid, chlorine, ClF_3, $Pb(N_3)_2$, (Cl_2+OF_2), ethylene oxide, fluoride, hydrogen peroxide, nitric acid hydrazide, hydrazoic acid, H_2S, K_2O_2, NaN_3, Na_2O_2.

SECTION 11 TOXICOLOGICAL INFORMATION

Sensitization: Long time skin contact may cause dermatitis

Acute Poisoning: Inhalation of dust may cause thirst, fever, headache, weakness, symptom of respiratory disorders.

1210 Qianjin Road(E), Jiujiang Jiangxi,China 332006
Tel: 86-792-8358899, Fax: 86-792-8355803

SECTION 12 ECOLOGICAL INFORMATION

Normal condition: No big influence may caused to ecology.
Waste Disposal Method
To dispose based on local, state or national laws.
Tank treatment: Not applicable.

SECTION 13 DISPOSAL CONSIDERATION

Hazardous wastage: NO.
Waste Disposal Method
To bury or burn at specified place based on national laws.

SECTION 14 TRANSPORTATION INFORMATION

No special regulation on this product for domestic or international transportation.

SECTION 15 REGULATORY INFORMATION

Must be complied with domestic or local regulation

SECTION 16 REGULATORY INFORMATION

14.1 INTERNATIONAL REGULATIONS:
EU Directive 2011/65/EU (RoHS): Compliant

SECTION 17 OTHER INFORMATION

Issued by: QC Department of Jiu Jiang Flex Co., Ltd
Disclaimer:
The data sheet information is true and accurate, but all statements and recommendations do not contain any guarantee. The consequence of the material shall be from practice. This report does not include all the circumstances that the user may encounter during operation. Each aspect of the operation may be increased or decreased during operation. All health and safety information contained in this report shall be submitted to you employees and customers. Users are responsible to take appropriate measures in practical operations.

CHUNG YU INDUSTRY CORPORATION

Material Safety Data Sheet

Section 1： Chemical Product and Company Identification

Product name	Thermal curable two-component marking ink
Other means of identification	ZSR-150 ZM-400WF
Recommended use of the chemical and restrictions on use	Use in PCB fabrication.
Manufacturer/Supplier identification	CHUNG YU INDUSTRY COPORATION
Manufacturer/Supplier address	618 Yen-Ping Rd., sec. 3, Ping-Jeng, Tao-Yuan, Taiwan
Emergency telephone No.	(886-3)4641205
FAX No.	(886-3)4644839

Section 2： Hazards Identification Information

Hazard classifications of the product	Inflammable liquids(II),Carcinogens, (II), Inhalation of hazardous substances (I)
Label elements	 Hazard symbols: Fire Caution catchwords: Danger Hazard massages: Inflammable liquids and vapor Harmful to swallow Skin irritation Eye irritation
Other hazards	—

Section 3： Composition, Information on Ingredients

Mixture：

Chemical name	Concentration(% of contents)	CAS. NO.
Epoxy resin	50	25085-99-8
Barium sulfate	15	7727-43-7
Titanium dioxide	30	13463-67-7
Naphtha	5	8030-30-6

Section 4 ： First-aid Measures

The first-aid measures for different exposure routes:	
Eyes contact	Immediately flush eyes with plenty of water for at least 15 minutes, occasionally lifting the upper and lower eyelids.
Skin contact	Flush skin with plenty of soap and water for at least 15 minutes while removing contaminated clothing and shoes.
Swallow	Do not induce vomiting. If conscious and alert, rinse mouth and drink 2-4 cupfuls of milk or water.
Inhalation	Remove from exposure to fresh air immediately.
The most important symptoms and hazardous effects	Headache, nausea
Notes to Physicians	Please provide the MSDS for physicians.

Section 5： Fire-fighting Measures

Suitable fire extinguishing media	Chemical dry powders, chemical foam, carbon dioxide
General information	As in any fire, wear a self-contained breathing apparatus in pressure-demand, MSHA/NIOSH (approved or equivalent), and full protective gear. During a fire, irritating and highly toxic gases may be generated by thermal decomposition or combustion.
Specific fire-fighting methods	It’s not suitable to use water extinguish.

Section 6： Accidental Release Measures

Person-related precautionary measures	Do not inhale vapors / aerosols. Ensure supply of fresh air in enclosed rooms.
Environmental-protection measures	Do not allow to enter sewerage system.
Procedures for cleaning / absorption	Take up with liquid-absorbent material. Forward for disposal. Clean up affected area

Section 7： Safe Handling and Storage Measures

Handling	Wash thoroughly after handling. Remove contaminated clothing and wash before reuse. Avoid contact with eyes, skin, and clothing. Avoid ingestion and inhalation.
Storage	Store in a cool(15～25℃), dry place. Keep container closed when not in use.

Section 8： Exposure Controls Measures

Engineering controls	Use adequate general or local exhaust ventilation to keep airborne concentrations below the permissible exposure limits. Use process enclosure, local exhaust ventilation, or other engineering controls to control airborne levels.
Control parameters	

Term	8 hours time weighted averagw exposure limits TWA	Short-term exposure limits STEL	Maximum limits CEILING	Biological standards BEIs
Solvent	100ppm	125ppm	—	—

Personal protective equipment	Eye protection: Wear safety glasses and chemical goggles if splashing is possible. Skin protection: Wear appropriate protective gloves and clothing to prevent skin exposure. Clothing: Wear appropriate protective clothing to minimize contact with skin. Respirators: Wear a NIOSH/MSHA or European Standard EN 149 approved full-facepiece airline respirator in the positive pressure mode with emergency escape provisions.

Section 9： Physical and Chemical Properties

Physical state：paste	Color：white
Odor threshold：—	Odor：slightly pungent
pH value：—	Melting point：—
Decomposition temperature：—	Boiling point：110-190℃ (solvent)
Flammability(solid, gas)：—	Flash point：38-43℃ (solvent) Test methods：—
Autoignition temperature：—	
Vapor pressure：<5 mmHg @ 25℃ (solvent)	Explosion limits：—
Specific gravity/Density：1.45～1.55 g/cm^3 (water=1)	Solubility in water：insoluble

Section 10： Stability and Reactivity

Chemical stability	Stable under normal temperatures and pressures.
Conditions to avoid	Fire.
Incompatibilities with other materials	Strong oxidants.
Hazardous decomposition products	Irritating and toxic fumes and gases.
Hazardous polymerization	Has not been reported.

Section 11： Toxicological Information

Information on the likely routes of exposure	Skins, swallow, inhale, eyes
Symptoms	Nausea, vertigo, irritation
Acute toxicity	Skins: Slight irritation Swallow: Nausea, vomit, and the other symptoms same as inhale Inhale: Cause the respiratory tract irritation, nausea, vomit, headache Eyes: The vapor cause eyes irritation LD50(solvent): >5000mg/kg (mouse, swallow) LC50:－
Further information	Further hazardous properties cannot be excluded. The product should be handled with the usual when dealing with chemicals

Section 12： Ecological Information

Ecotoxic effect	Quantitative data on the ecologic effect of this product are not available.
Further ecologic data	No ecological problems are to be expected when the product is handled and due care and attention.

Section 13 - Disposal Considerations

Dispose of in a manner consistent with federal, state, and local regulations.

Section 14 - Transport Information

1. United Nation number (UN No.): 1866
2. UN proper shipping name: －
3. Transport hazard classes: 3
4. Packing group:－
5. Marine pollutant (Yes/No): No
6. Specific transport measures and precautionary conditions: －

Section 15 - Regulatory Information

1. European / International Regulations：European labeling in accordance with EC Directives.
2. Other using condition should follow local regulations.

Section 16 - Additional Information

Organization that prepared the MSDS	Name: R&D	TEL: (886-3)4641205	
	Address: 618 Yen-Ping Rd., sec. 3, Ping-Jeng, Tao-Yuan, Taiwan		
Person who prepared the MSDS	Job: manager	Name: Wan-Hua Lee	
Date the MSDS was prepared	2018/12/20		

The information above is believed to be accurate and represents the best information currently available to us. However, we make no warranty of merchantability or any other warranty, express or implied, with respect to such information, and we assume no liability resulting from its use. Users should make their own investigations to determine the suitability of the information for their particular purposes. In no way shall the company be liable for any claims, losses, or damages of any third party or for lost profits or any special, indirect, incidental, consequential or exemplary damages, howsoever arising, even if the company has been advised of the possibility of such damages.

Material Safety Data Sheet

Copyright, 2003, 3M Company. All rights reserved. Copying and/or downloading of this information for the purpose of properly utilizing 3M products is allowed provided that: (1) the information is copied in full with no changes unless prior written agreement is obtained from 3M, and (2) neither the copy nor the original is resold or otherwise distributed with the intention of earning a profit thereon.

This material safety data sheet (MSDS) is provided as a courtesy in response to a customer request. This product is not regulated under, and a MSDS is not required for this product by the OSHA Hazard Communication Standard (29 CFR 1910.1200) because, when used as recommended or under ordinary conditions, it should not present a health and safety hazard. However, use or processing of the product not in accordance with the product's recommendations or not under ordinary conditions may affect the performance of the product and may present potential health and safety hazards.

SECTION 1: PRODUCT AND COMPANY IDENTIFICATION

PRODUCT NAME: 3M(TM) Laminating Adhesives 9471LE, 9472LE, 9671LE, 9672LE, 9653LE, 9453LE
MANUFACTURER: 3M
DIVISION: Industrial Adhesives and Tapes
ADDRESS: 3M Center
St. Paul, MN 55144-1000

EMERGENCY PHONE: 1-800-364-3577 or (651) 737-6501 (24 hours)

Issue Date: 06/20/2003
Supercedes Date: 05/22/2001

Document Group: 08-9111-9

Product Use:
Specific Use: Laminating Adhesive

SECTION 2: INGREDIENTS

Ingredient	C.A.S. No.	% by Wt
TACKIFIED ACRYLATE POLYMER	None	100

SECTION 3: HAZARDS IDENTIFICATION

3.1 EMERGENCY OVERVIEW

Specific Physical Form: Roll of Tape
Odor, Color, Grade: Tan, Acrylate odor when unrolled.
General Physical Form: Solid
Immediate health, physical, and environmental hazards: This product, when used under reasonable conditions and in accordance with the 3M directions for use, should not present a health hazard. However, use or processing of the product in a manner not in accordance with the product's directions for use may affect the performance of the product and may present potential health and safety hazards.

3.2 POTENTIAL HEALTH EFFECTS

Eye Contact:
No health effects are expected.

Skin Contact:
No health effects are expected.

Inhalation:
No health effects are expected. This product may have a characteristic odor; however, no adverse health effects are anticipated.

Ingestion:
No health effects are expected.

SECTION 4: FIRST AID MEASURES

4.1 FIRST AID PROCEDURES

The following first aid recommendations are based on an assumption that appropriate personal and industrial hygiene practices are followed.

Eye Contact: No need for first aid is anticipated.

Skin Contact: No need for first aid is anticipated.

Inhalation: No need for first aid is anticipated.

If Swallowed: No need for first aid is anticipated.

SECTION 5: FIRE FIGHTING MEASURES

5.1 FLAMMABLE PROPERTIES

Autoignition temperature	*No Data Available*
Flash Point	*Not Applicable*
Flammable Limits - LEL	*Not Applicable*
Flammable Limits - UEL	*Not Applicable*

5.2 EXTINGUISHING MEDIA
Use fire extinguishers with class B extinguishing agents (e.g., dry chemical, carbon dioxide).

5.3 PROTECTION OF FIRE FIGHTERS

Special Fire Fighting Procedures: Wear full protective clothing, including helmet, self-contained, positive pressure or pressure demand breathing apparatus, bunker coat and pants, bands around arms, waist and legs, face mask, and protective covering for exposed areas of the head.

Unusual Fire and Explosion Hazards: No unusual fire or explosion hazards are anticipated.

Note: See STABILITY AND REACTIVITY (SECTION 10) for hazardous combustion and thermal decomposition information.

SECTION 6: ACCIDENTAL RELEASE MEASURES

Accidental Release Measures: Not applicable.

SECTION 7: HANDLING AND STORAGE

7.1 HANDLING

Avoid prolonged or repeated skin contact. This product is considered to be an article which does not release or otherwise result in exposure to a hazardous chemical under normal use conditions.

7.2 STORAGE

Not applicable.

SECTION 8: EXPOSURE CONTROLS/PERSONAL PROTECTION

8.1 ENGINEERING CONTROLS

Not applicable.

8.2 PERSONAL PROTECTIVE EQUIPMENT (PPE)

8.2.1 Eye/Face Protection

Avoid eye contact.

8.2.2 Skin Protection

Avoid prolonged or repeated skin contact. Gloves not normally required.

8.2.3 Respiratory Protection

Under normal use conditions, airborne exposures are not expected to be significant enough to require respiratory protection.

8.2.4 Prevention of Swallowing

Not applicable.

8.3 EXPOSURE GUIDELINES

None Established

SECTION 9: PHYSICAL AND CHEMICAL PROPERTIES

Specific Physical Form:	Roll of Tape
Odor, Color, Grade:	Tan, Acrylate odor when unrolled.
General Physical Form:	Solid
Autoignition temperature	*No Data Available*
Flash Point	*Not Applicable*
Flammable Limits - LEL	*Not Applicable*
Flammable Limits - UEL	*Not Applicable*
Boiling point	*Not Applicable*

Vapor Density	*Not Applicable*
Vapor Pressure	*Not Applicable*
Specific Gravity	Approximately 1.01 [*Ref Std:* WATER=1]
pH	*Not Applicable*
Melting point	*No Data Available*
Solubility in Water	Nil
Evaporation rate	*Not Applicable*
Volatile Organic Compounds	*No Data Available*
Percent volatile	*No Data Available*
VOC Less H2O & Exempt Solvents	*No Data Available*
Viscosity	*Not Applicable*

SECTION 10: STABILITY AND REACTIVITY

Stability: Stable.

Materials and Conditions to Avoid: None known

Hazardous Polymerization: Hazardous polymerization will not occur.

Hazardous Decomposition or By-Products

Substance	Condition
Hydrocarbons	During Combustion
Carbon monoxide	During Combustion
Carbon dioxide	During Combustion

Hazardous Decomposition: Under recommended usage conditions, hazardous decomposition products are not expected. Hazardous decomposition products may occur as a result of oxidation, heating, or reaction with another material.

SECTION 11: TOXICOLOGICAL INFORMATION

Please contact the address listed on the first page of the MSDS for Toxicological Information on this material and/or its components.

SECTION 12: ECOLOGICAL INFORMATION

ECOTOXICOLOGICAL INFORMATION

Not applicable.

CHEMICAL FATE INFORMATION

Not applicable.

SECTION 13: DISPOSAL CONSIDERATIONS

Waste Disposal Method: Dispose of waste product in a sanitary landfill. As a disposal alternative, incinerate in an industrial or

commercial facility.

Since regulations vary, consult applicable regulations or authorities before disposal.

SECTION 14:TRANSPORT INFORMATION

Please contact the emergency numbers listed on the first page of the MSDS for Transportation Information for this material.

SECTION 15: REGULATORY INFORMATION

US FEDERAL REGULATIONS

Contact 3M for more information.

311/312 Hazard Categories:
Fire Hazard - No Pressure Hazard - No Reactivity Hazard - No Immediate Hazard - No Delayed Hazard - No

STATE REGULATIONS

Contact 3M for more information.

CHEMICAL INVENTORIES

This product is an article as defined by TSCA regulations, and is exempt from TSCA Inventory listing requirements.

Contact 3M for more information.

INTERNATIONAL REGULATIONS

Contact 3M for more information.

This MSDS has been prepared to meet the U.S. OSHA Hazard Communication Standard, 29 CFR 1910.1200.

SECTION 16: OTHER INFORMATION

NFPA Hazard Classification
Health: 0 **Flammability:** 1 **Reactivity:** 0 **Special Hazards:** None

National Fire Protection Association (NFPA) hazard ratings are designed for use by emergency response personnel to address the hazards that are presented by short-term, acute exposure to a material under conditions of fire, spill, or similar emergencies. Hazard ratings are primarily based on the inherent physical and toxic properties of the material but also include the toxic properties of combustion or decomposition products that are known to be generated in significant quantities.

Reason for Reissue: The MSDS has been revised because 3M has adopted the 16-section ANSI/ISO format. The potential hazards of the product have not changed. We encourage you to reread the MSDS and review the information.

DISCLAIMER: The information in this Material Safety Data Sheet (MSDS) is believed to be correct as of the date issued. 3M MAKES NO WARRANTIES, EXPRESSED OR IMPLIED, INCLUDING, BUT NOT LIMITED TO, ANY IMPLIED WARRANTY OF MERCHANTABILITY OR FITNESS FOR A PARTICULAR PURPOSE OR COURSE OF PERFORMANCE OR USAGE OF TRADE. User is responsible for determining whether the 3M product is fit for a particular purpose and suitable for user's method of use or application. Given the variety of factors that can affect the use and application of a 3M product, some of which are uniquely within the user's knowledge and control, it is essential that the user evaluate the 3M product to determine whether it is fit for a particular purpose and suitable for user's method of use or application.

3M provides information in electronic form as a service to its customers. Due to the remote possibility that electronic transfer may have resulted in errors, omissions or alterations in this information, 3M makes no representations as to its completeness or accuracy. In addition, information obtained from a database may not be as current as the information in the MSDS available directly from 3M.

3M MSDSs are available at www.3M.com

江阴凯博通信科技有限公司
JIANGYIN KAIBO COMMUNICATION TECHNOLOGY CO.,LTD.
Material Safety Data Sheet（物质安全资料表）

一、　物品与厂商资料
物品名称：同轴高频线
物品编号：RF081 系列
制造商或供货商名称、地址：江阴市凯博通信科技有限公司/江苏省江阴市澄江镇梅园大街 391 号
紧急联络电话/传真电话：0510-86070001/86070020
二、　成分辨识资料
纯物质：
中英文名称：聚全氟乙丙烯 FLUORINATED PROPYLENE ETHYLENE/镀锡线 TINNED COPPER/镀银铜线 Cu-silver plated 同义名称：FEP/TX/SC
危害物质成分(成分百分比）：无

危害物质：

危害物质	浓度或浓度范围（单位：ppm）	
铅及其化合物 Pb	≤90	
镉及其化合物 Cd	≤75	
汞及其化合物 Hg	≤1000	
六价铬及化合物	≤1000	
卤素	氯 Cl≤900	氯 Cl+溴 Br≤1500
	溴 Br≤900	
SVHC15 种物质	禁止使用	

三、危害辨识数据

最重要危害效应	健康危害效应：在 260℃ 以上，可能会有吸入分解气体的危险.一定要安装排气装置.
	环境影响：要按废弃物处理及清扫法律法规处理,绝对不可燃烧.
	物理性及化学性危害：物理化学性能及其稳定,不易降解,不得擅自填埋 .
	特殊危害：　无
主要症状：　对人的神经系统产生损害	
物品危害分类：大气和水源	

四、急救措施

不同暴露途径之急救方法： ・吸入：到空气流通处换气. ・皮肤接触：无 ・眼睛接触：无 ・食入：　不消化,排出.
最重要症状及危害效应：无

对急救人员之防护：对流换气
对医师之提示： 吸氧

五、灭火措施

适用灭火剂： 通用
灭火时可能遭遇之特殊危害： 避免分解气体吸入
特殊灭火程序：无
消防人员之特殊防护设备：防毒面罩

六、泄漏处理方法

个人应注意事项：粉状树脂
环境注意事项： 不可填埋
清理方法：要按废弃物处理及清扫法律法规处理,绝对不可燃烧.

七、安全处置与储存方法

处置：避免与高温和火源接触.
储存：通风干燥处.

八、暴露预防措施

工程控制：无
控制参数： · 八小时日时量平均容许浓度/短时间时量平均容许浓度/最高容许浓度： · 生物指标：
个人防护设备： · 呼吸防护：安装排气装置 · 手部防护：无 · 眼睛防护：无 · 皮肤及身体防护：无
卫生措施：应将衣服上附着的灰尘抖落,手脸洗净,不要让其附着于香烟上.

九、物理及化学性质

物质状态：固体	形状：透明颗粒
颜色：透明	气味： 无
pH 值： 7	沸点/沸点范围： /
分解温度： 360℃	闪火点： /
自燃温度： /	爆炸界限： /
蒸气压： /	蒸气密度： /
密度： 2.2	溶解度： /

十、安定性及反应性

安定性：很稳定
特殊状况下可能之危害反应：高温或燃烧分解气体对人体神经系统的损害.
应避免之状况：绝对不可燃烧.
应避免之物质：金属钠及其强酸的混合物 .

危害分解物： 气体及粉尘.

十一、毒性资料

急毒性：/
局部效应：/
致敏感性： /
慢毒性或长期毒性： /
特殊效应： /

十二、生态资料

可能之环境影响/环境流布：不降解,禁填埋

十三、废弃处置方法

废弃处置方法：按废弃物处理及清扫法律法规要求送专业资质处理公司处置.

十四、运送资料

国际运送规定：/
联合国编号： /
国内运送规定： 无
特殊运送方法及注意事项：无

十五、法规资料

适用法规：遵循欧盟 REACH 法规相关要求。

十六、其它数据

参考文献	杜邦产品说明/SONY 限用物资标准
制窗体位	名称：江阴凯博通信科技有限公司
	地址/电话：江阴市澄江街道梅园大街 391 号/0510-86070017
制 表 人	姓名(签章)：庄科洁
制表日期	2012/11/12

PRODUCT SPECIFICATION
製 品 規 格

No. PRS-1907

MHF4L Connector

Plug Parts No. : 20565-001R-13,20572-001R-08

Receptacle Parts No. : 20579-001E-01

Qualification Test Report No. TR-14097

					Prepared by	Reviewed by	Approved by
					K.Hashiba Nov./24/'14	T.Tagawa Nov./27/'14	T.Takano Nov./27/'14
0	S14352	K.H	Nov./24/'14				
REV.	ECN	BY	DATE	APP.			
REVISION RECORD							

DOCUMENT CLASSIFICATION	TITLE	No.
PRODUCT SPECIFICATION 製品規格	MHF4L Connector Plug Parts No. : 20565-001R-13,20572-001R-08 Receptacle Parts No. : 20579-001E-01	PRS-1907

1. 適応範囲／Scope

本規格は、MHF4L Connector の性能と試験条件について規定する。

試験条件は“PCI Express® M.2 Electromechanical Specification DRAFT Revision 1.0”に準ずる。

This specification covers the requirements for product performance and test methods of MHF4L Connector.
Test method is complied with “PCI Express® M.2 Electromechanical Specification DRAFT Revision 1.0”.

2. 製品名称及び製品型番／Product Name and Parts No.

2.1 製品名称／Product Name

MHF4L connector

2.2 製品型番／Parts No.

Plug : 20565-001R-13
20572-001R-08
Receptacle : 20579-001E-01

3. 定格／Rating

3.1 適応ケーブル／Applicable cable

3.1.1 Part No. 20565-001R-13

(1) 構成

中心導体 : AWG#32(7/0.08), 銀メッキ軟銅線
誘電体 : フッ素樹脂,外径 0.68(+0.04,-0.02)mm,標準厚さ 0.22mm
外部導体 : 16/4/0.05,標準外径 0.93mm, 銀メッキ軟銅線または錫メッキ軟銅線
ジャケット : フッ素樹脂,外径 1.13(+0.08,-0.05)mm, 標準厚さ 0.1mm

(2) 仕様

特性インピーダンス : 50±2Ω (TDR)
標準静電容量（参考値） : 97pF/m
293K(20℃)時の中心導体導体抵抗（参考値） : 520Ω/km
絶縁抵抗 : 1,500MΩ・km 以上
耐電圧 : AC 500V・1 分間にて絶縁破壊の無い事

(1) Description

Inner conductor : AWG#32(7/0.08)
Silver plating annealed copper wire
Dielectric core : Fluoro-plastics , diameter 0.68(+0.04,-0.02)mm , nominal thickness 0.22mm
Outer conductor : 16/4/0.05 , nominal diameter 0.93mm , silver plating annealed copper wire or tin-copper alloy
Jacket : Fluoro-plastics , diameter 1.13(+0.08,-0.05)mm , nominal thickness 0.1mm

(2) Requirements

Characteristic impedance : 50±2Ω by TDR method
Nominal capacitance(Reference value) : 97 pF/m
Conductor resistance of inner conductor at 293K (20℃)(Reference value) : 520Ω/km
Insulation resistance : 1,500MΩ・km MIN.
Dielectric withstand voltage : no breakdown at AC 500V for 1 minutes.

DOCUMENT CLASSIFICATION	TITLE	No.
PRODUCT SPECIFICATION 製品規格	MHF4L Connector Plug Parts No. : 20565-001R-13,20572-001R-08 Receptacle Parts No. : 20579-001E-01	PRS-1907

3.1.2 Part No. 20572-001R-08

(1) 構成

中心導体 : AWG#36(7/0.05),銀メッキ軟銅線

誘電体 : フッ素樹脂,外径 0.4(+0.04,-0.02)mm,標準厚さ 0.125mm

外部導体 : 8/5/0.05,標準外径 0.65mm, 銀メッキ軟銅線または錫メッキ軟銅線

ジャケット : フッ素樹脂,外径 0.81(+0.04,-0.02)mm, 標準厚さ 0.08mm

(2) 仕様

特性インピーダンス : 50±2Ω (TDR)

標準静電容量(参考値) : 96pF/m

293K(20℃)時の中心導体抵抗(参考値) : 1,400Ω/km

絶縁抵抗 : 1,000MΩ・km 以上

耐電圧 : AC 1,000V・1分間にて絶縁破壊の無い事

(1) Description

Inner conductor : AWG#36(7/0.05)

Silver plating annealed copper wire

Dielectric core : Fluoro-plastics ,diameter 0.4(+0.04,-0.02)mm , nominal thickness 0.125mm

Outer conductor : 8/5/0.05 , nominal diameter 0.65mm , silver plating annealed copper wire or tin-copper alloy

Jacket : Fluoro-plastics , diameter 0.81(+0.04,-0.02)mm , nominal thickness 0.08mm

(2) Requirements

Characteristic impedance : 50±2Ω by TDR method

Nominal capacitance(Reference value): 96 pF/m

Conductor resistance of inner conductor at 293K (20℃)(Reference value) : 1,400Ω/km

Insulation resistance : 1,000 MΩ・km MIN.

Dielectric withstand voltage : no breakdown at AC 1,000V for 1 minutes.

3.2 使用条件／Operating Condition

電圧/Rated voltage	AC60Vr.m.s			
公称特性インピーダンス/ Nominal characteristic impedance	50 ohm.			
周波数/Frequency	Plug : 0.1GHz～6GHz Receptacle : 0.1GHz～12GHz			
VSWR	Frequency	0.1～3GHz	3～6GHz	6～12GHz
	Plug	1.30 MAX.	1.45 MAX.	
	Receptacle	1.30 MAX.	1.40 MAX.	1.85 MAX.
使用温度範囲/ Service temperature	233K～363K(-40℃～90℃)			

DOCUMENT CLASSIFICATION	TITLE	No.
PRODUCT SPECIFICATION 製品規格	MHF4L Connector Plug Parts No. : 20565-001R-13,20572-001R-08 Receptacle Parts No. : 20579-001E-01	PRS-1907

4. 試験及び性能／Test and Performance

試験条件／Test Condition

本試験の初期とは、出荷時の状態のことである。
特に指定のない限り、測定と試験は、MIL-STD-202 に基づき以下の条件で行う。
This initial test is equal to it's at shipping condition and unless otherwise specified, all tests and measurements shall be performed under the following conditions in accordance with MIL-STD-202.

温度／Temperature … 288K～308K（15℃～35℃）
気圧／Pressure … 866hPa～1066hPa（650mmHg～800mmHg）
相対湿度／Relative Humidity … 45～75%R.H.

4.1.電気的性能／Electrical Performance

No	項目 / Items	試験条件 / Test Conditions	規格 / Specifications
1.	接触抵抗	テスト基板にリセプタクルコネクタを半田付けし、プラグコネクタを嵌合させ、開回路電圧 20mV DC 以下、短絡電流 10mA DC 以下で 4 端子法に芯線及びシールド線の図 1 に示す区間の接触抵抗を測定する。 MIL-STD-202 試験法 307 に準拠。	[中心コンタクト] 初期：20mΩMAX. 試験後：⊿R 20mΩ MAX. [外部コンタクト] 初期：20mΩMAX. 試験後：⊿R 20mΩ MAX.
	Contact Resistance	Solder the receptacle connector to the test board and mate the plug connector together, then measure the contact resistance as shown in Fig.1 by the four terminal methods. Apply the low level condition of 20mV MAX. DC for the open circuit voltage and 10mA MAX. DC for the closed circuit current in accordance with MIL-STD-202, Method 307.	[Inner contact] Initial：20mΩMAX. After testing：⊿R 20mΩ MAX. [Ground contact] Initial：20mΩMAX. After testing：⊿R 20mΩ MAX.
2.	絶縁抵抗	リセプタクル及びプラグコネクタを嵌合させた状態で、中心導体と外部導体の間に DC100V を印加し、測定する。 MIL-STD-202 試験法 302 に準拠。	初期 ：500 MΩ MIN. 試験後 ： 100 MΩ MIN.
	Insulation Resistance	Mate the plug and receptacle connector together, and then apply DC 100 V between the inner contact and the ground contact in accordance with MIL-STD-202, Method 302.	Initial ：500 MΩ MIN. After testing ：100 MΩ MIN.
3.	耐電圧	リセプタクル及びプラグコネクタを嵌合させ、隣接する端子間に AC200V（実効値）を一分間印加する。 MIL-STD-202 試験法 301 に準拠。	沿面放電、空中放電、絶縁破壊等の異常無きこと。
	Dielectric Withstanding Voltage	Mate the receptacle and plug connector together, then apply AC 200V(rms) between the neighboring contacts for a minute in accordance with MIL-STD-202, Method 301.	No creeping discharge, flashover, no insulator breakdown shall occur.
4.	VSWR	ネットワークアナライザーにて図 2 のように電圧定在波比を測定する。 周波数 ： 0.1GHz ～ 12GHz Measure the VSWR as shown in Fig.2 by the network analyzer. Frequency ： 0.1GHz ～ 12GHz	[Plug] 1.30 MAX. at 0.1～3GHz 1.45 MAX. at 3～6GHz [Receptacle] 1.30 MAX. at 0.1～3GHz 1.40 MAX. at 3～6GHz 1.85 MAX. at 6～12GHz

DOCUMENT CLASSIFICATION	TITLE	No.
PRODUCT SPECIFICATION 製品規格	MHF4L Connector Plug Parts No. : 20565-001R-13,20572-001R-08 Receptacle Parts No. : 20579-001E-01	PRS-1907

4.2.機械的性能／Mechanical Performance

No	項目 / Items	試験条件 / Test Conditions	規格 / Specifications
1.	挿入力 / 抜去力	テスト基板にリセプタクルを半田付けする。その後、試料を挿抜試験機に取り付け、嵌合軸に平行に毎分 25±3mm の速度で、初期及び 30 回目の挿入抜去力を測定する。	[挿入力／Mating] 初期/Initial :30 N MAX. 30 回目/30cycles:30 N MAX. [抜去力／Un-mating] 初期/Initial :20 N MAX. 5N MIN. 30 回目/30cycles:20 N MAX. 3N MIN.
	Mating Force And Un-mating Force	Solder the receptacle connector to the test board, then place the board and plug on push-on/pull-off machine, measure of initial and mating/un-mating 30 cycles at a speed 25±3mm/min. along the mating axis.	
2.	30 度引張	プラグ及びリセプタクルコネクタを嵌合させた状態で、図.3 の様にケーブルを 30° 傾け、10〔N〕の力で矢印の方向に 10 回引張る。	[外観] 異常無き事。 [瞬断] 試験中、1μs を超える電気的瞬断の無き事。
	Cable retention force at 30 degree	Mate Plug with Receptacle and tilt cable by 30 degree and pull the cable by 10N force with 10cycles toward arrowhead direction. (Fig.3)	[Appearance] No abnormality [Electrical discontinuity〕 No electrical discontinuity grater than 1μs.
3.	水平引張	プラグ及びリセプタクルコネクタを嵌合させた状態で、図.4 の様にφ1.13cable は水平方向 20〔N〕の力で引張る。φ0.81cable の場合は、10〔N〕の力で引張る。	[外観] 異常無き事。 [瞬断] 試験中、1μs を超える電気的瞬断の無き事。
	Cable retention force at 0 degree	Mate Plug with Receptacle and pull the φ1.13 cable by 20N force toward horizontal direction. (Fig.4) In case of φ0.81 cable strength should have more than 10N.	[Appearance] No abnormality [Electrical discontinuity〕 No electrical discontinuity grater than 1μs.
4.	耐久性	テスト基板にリセプタクルを半田付けする。その後、試料を挿抜試験機に取り付け、嵌合軸に平行に毎分 25±3mm の速度で、30 回挿入抜去を行う。	[外観] 異常無き事。 [接触抵抗] 4.1.1 を満足する事。
	Durability	Solder the receptacle connector to the test board, then place the board and plug on the push-on/pull-off machine, and repeat mating and un-mating 30 cycles at a speed 25±3mm/min. along the mating axis.	[Appearance] No abnormality [Contact Resistance] Shall meet4.1.1.
5.	半田剥離強度	テスト基板に半田付けされたリセプタクルコネクタを図.5 のように各方向から押す。 コネクタが破壊されるときの強度を測定する。	[剥離強度] 20N MIN.
	Receptacle shearing strength	Solder the receptacle connector to the test board, Push the receptacle connector from each directions as Shown in Fig.5. Measure the strength when the connector is broken.	[Shearing strength] 20N MIN.

DOCUMENT CLASSIFICATION	TITLE	No.
PRODUCT SPECIFICATION 製品規格	MHF4L Connector Plug Parts No. : 20565-001R-13,20572-001R-08 Receptacle Parts No. : 20579-001E-01	PRS-1907

No	項目 / Items	試験条件 / Test Conditions	規格 / Specifications
6.	耐振動性	DC100mA の電流を流しながら、嵌合状態のコネクタに下記の振動を加える。 周波数: 10Hz → 100Hz → 10Hz ／約 15 分間 片振幅、加速度 : 1.5mm or 59m/ s^2 (6G) 方向、サイクル : 3 つの互いに直角な方向について各 5 サイクル(約 75 分)実施。	[外観] 異常無き事。 [接触抵抗] 4.1.1.を満足する事。 [瞬断] 試験中、1 μ s を超える電気的瞬断の無き事。
	Vibration	Apply the following vibration to the mating connector. During the testing, run 100mA DC to check electrical discontinuity. Frequency : 10Hz →100Hz → 10Hz ／ approx 15minutes. Half amplitude, Peak value of acceleration :1.5mm or 59m/s^2 (6G) Directions , cycle : 3 mutually perpendicular direction, 5 cycles (approx 75minutes.) for each direction.	[Appearance] No abnormality [Contact Resistance] Shall meet 4.1.1. [Electrical discontinuity] No electrical discontinuity grater than 1 μ s.
7.	耐衝撃性	嵌合状態のコネクタを、衝撃試験機に取り付け、下記の衝撃を加える。尚、試験中に DC100mA の電流を流して電気的瞬断を確認する。 MIN-STD-202 試験法 213 試験条件 B に準拠。 最大加速度 : 735m/s^2(75G) 標準持続時間 : 11m/sec 波形 : 半波正弦波 方向 : 直交する 6 方向、各 3 回	[外観] 異常無き事。 [接触抵抗] 4.1.1.を満足する事。 [瞬断] 試験中、1 μ s を超える電気的瞬断の無き事。
	Shock	Apply the following shock to the mating connector in accordance with MIL-STD-202, Method 213, Condition B. During the testing, run 100mA DC to check electrical discontinuity. Peak value of acceleration : 735m/s^2 (75G) Duration : 11msec Wave Form : Half sinusoidal Directions , cycle : 6 mutually perpendicular direction , 3 cycles for each direction	[Appearance] No abnormality [Contact Resistance] Shall meet 4.1.1. [Electrical discontinuity] No electrical discontinuity grater than 1 μ s.

DOCUMENT CLASSIFICATION	TITLE	No.
PRODUCT SPECIFICATION 製品規格	MHF4L Connector Plug Parts No. : 20565-001R-13,20572-001R-08 Receptacle Parts No. : 20579-001E-01	PRS-1907

4.3.耐環境性能／Environmental Performance

No	項目 / Items	試験条件 / Test Conditions	規格 / Specifications
1.	熱衝撃	テスト基板にリセプタクルコネクタを半田付けし、プラグコネクタと嵌合させ、以下の環境条件に暴露する。 MIL-STD-202 試験法 107 試験条件 A に準拠。 温度 :218K(-55℃):30 分→358K(85℃):30 分 移動時間 : 5 分以下. 回数 : 5 サイクル	[外観] 異常無き事。 [接触抵抗] 4.1.1.を満足する事。 [絶縁抵抗] 4.1.2.を満足する事。 [耐電圧] 4.1.3.を満足する事。
	Thermal Shock	Solder the receptacle connector to the test board, then mate plug connector, and expose them to the following environment in accordance with MIL-STD-202, Method 107, Condition A. Temperature:218K(-55℃):30min.→358K(85℃):30min. Transition time:5min. MAX. No. of cycles :5 cycles	[Appearance] No abnormality [Contact Resistance] Shall meet 4.1.1. [Insulation Resistance] Shall meet 4.1.2. [Dielectric Withstanding Voltage] Shall meet 4.1.3.
2.	高温寿命	テスト基板にリセプタクルコネクタを半田付けし、プラグコネクタと嵌合させ、以下の環境条件に暴露する。 MIL-STD-202 試験法 108 試験条件 B に準拠。 温度:363±2K (90±2℃) 期間:96 時間	[外観] 異常無き事。 [接触抵抗] 4.1.1.を満足する事。
	High Temperature Life	Solder the receptacle connector to the test board, then mate plug connector, and expose them to the following environment in accordance with MIL-STD-202, Method 108, Condition B. Temperature:363±2K (90±2℃) Duration:96 hours	[Appearance] No abnormality [Contact Resistance] Shall meet 4.1.1.
3.	湿度(定常状態)	テスト基板にリセプタクルコネクタを半田付けし、プラグコネクタと嵌合させ、以下の環境条件に暴露する。 MIL-STD-202 試験法 103 試験条件 A に準拠。 温度:313±2K (40±2℃) 湿度:90～95%RH 期間:96 時間	[外観] 異常無き事。 [接触抵抗] 4.1.1.を満足する事。 [絶縁抵抗] 4.1.2.を満足する事。 [耐電圧] 4.1.3.を満足する事。
	Humidity (Steady State)	Solder the receptacle connector to the test board, then mate plug connector, and expose them to the following environment in accordance with MIL-STD-202, Method 103, Condition A. Temperature:313±2K (40±2℃) Humidity :90～95%RH Duration :96 hours	[Appearance] No abnormality [Contact Resistance] Shall meet 4.1.1. [Insulation Resistance] Shall meet 4.1.2. [Dielectric Withstanding Voltage] Shall meet 4.1.3.

DOCUMENT CLASSIFICATION	TITLE	No.
PRODUCT SPECIFICATION 製品規格	MHF4L Connector Plug Parts No. : 20565-001R-13,20572-001R-08 Receptacle Parts No. : 20579-001E-01	PRS-1907

No	項目 / Items	試験条件 / Test Conditions	規格 / Specifications
4.	塩水噴霧	テスト基板にリセプタクルコネクタを半田付けし、プラグコネクタと嵌合させ、以下の環境条件に暴露する。 MIL-STD-202 試験法 101 試験条件 B に準拠。 温度 :308±2K (35±2℃) 塩水濃度 :5±1%[重量比] 期間 :48 時間	[外観] 異常無き事。 [接触抵抗] 4.1.1.を満足する事。
	Salt Water Spray	Solder the receptacle connector to the test board, then mate plug connector, and expose them to the following environment in accordance with MIL-STD-202, Method 101, Condition B. Temperature :308±2K (35±2℃) Salt water density:5±1% [by weight] Duration :48 hours	[Appearance] No abnormality [Contact Resistance] Shall meet 4.1.1.
5.	硫化水素ガス	テスト基板にリセプタクルコネクタを半田付けし、プラグコネクタと嵌合させ、以下の環境条件に暴露する。 温度 :313±2K (40±2℃) 相対湿度:80±5%RH ガス :H_2S 3±1ppm 期間 :48 時間	[外観] 性能上有害な異常無き事。 [接触抵抗] 4.1.1.を満足する事。
	H_2S Gas	Solder the receptacle connector to the test board, then mate plug connector, and expose them to the following environment Temperature :313±2K (40±2℃) Relative Humidity:80±5%RH Gas :H_2S 3±1ppm Duration :48 hours	[Appearance] No abnormality adversely affecting the performance shall occur. [Contact Resistance] Shall meet 4.1.1.

4.4.その他 (Others)

No	項目 / Items	試験条件 / Test Conditions	規格 / Specifications
1.	半田付け性	端子の半田付け部を 518±5K（245±5℃）の半田槽内に 5±0.5 秒間浸す。フラックスは、RMA 型を使用し、5～10 秒間浸漬するものとする。 MIL-STD-202F 試験法 208E に準拠。	浸した面積の 95%以上に半田が付着し、かつピンホール空隙が1箇所に集中せず、5%以下である事。
	Solder ability	Dip the soldering point of the contacts in the solder bath at 518±5K（245±5℃） for 5±0.5seconds after immersing the tine in the flux of RMA type for 5 to 10 seconds in accordance with MIL-STD-202F, Method 208E.	The surface of the dipped contact must become 95% wet and the non-wetted pinholes must not accumulate in one area but be distributed and must be less than 5% of the contact area to be soldered.
2.	半田耐熱性	リフロー温度プロファイルは図 6 を参照。 リフロー回数は 2 回以内。 メタルマスクサイズは図 7 を参照。	機能を損なう変形及び欠陥の無き事。
	Soldering Heat Resistance	Reflow temperature profile as shown in Fig.6. The number of times of Reflow is within 2. Metal mask size Fig.7	No abnormality adversely affecting the performance shall not occur.

DOCUMENT CLASSIFICATION	TITLE	No.
PRODUCT SPECIFICATION 製品規格	MHF4L Connector Plug Parts No. : 20565-001R-13,20572-001R-08 Receptacle Parts No. : 20579-001E-01	PRS-1907

4.5 試験順序と試料数／Test Sequence and Sample Quantity

表(Table)1　試験順序と試料数／Test Sequence and Sample Quantity

※グループ表中の番号は、試験順序を示す。

The number of group is test sequence.

試験項目／Test Item		Group															
		A	B	C	D	E	F	G	H	J	K	L	M	N	P	Q	R
(1)	接触抵抗 Contact Resistance						1,3		1,3	1,3	1,5	1,3	1,5	1,3	1,3		
(2)	絶縁抵抗 Insulation resistance										2,6		2,6				
(3)	耐電圧 Dielectric withstanding voltage	1									3,7		3,7				
(4)	VSWR		1														
(5)	挿抜力/抜去力 mating force/Unmating force			1													
(6)	30度引張 Cable retention force at 30 degree				1												
(7)	水平引張 Cabel retention force at 0 degree					1											
(8)	耐久性 Durability						2										
(9)	半田剥離強度 Shearing strength							1									
(10)	耐振動性 Vibration								2								
(11)	耐衝撃性 Shock									2							
(12)	熱衝撃 Thermal shock										4						
(13)	高温寿命 High temperature life											2					
(14)	湿度(定常状態) Humidity (steady state)												4				
(15)	塩水噴霧 Salt Water Spray													2			
(16)	硫化水素ガス H_2S Gas														2		
(17)	半田付け性 Solder ability															1	
(18)	半田耐熱性 Soldering Heat Resistance																1
Sample QTY pcs.	Plug	10	10	10	10	10	10	----	10	10	10	10	10	10	10	----	----
	Receptacle	10	10	10	10	10	10	12	10	10	10	10	10	10	10	10	10
Test Board pcs.		10	10	10	10	10	10	12	10	10	10	10	10	10	10	10	10

DOCUMENT CLASSIFICATION	TITLE	No.
PRODUCT SPECIFICATION 製品規格	MHF4L Connector Plug Parts No. : 20565-001R-13,20572-001R-08 Receptacle Parts No. : 20579-001E-01	PRS-1907

5. 測定方法／Measuring method

5.1 接触抵抗測定方法／Measuring method of Contact Resistance

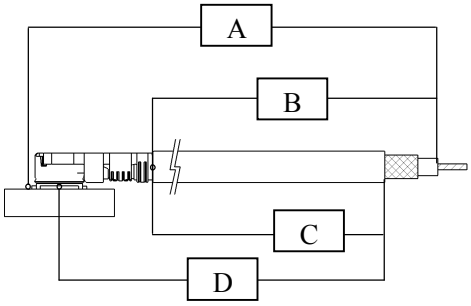

中心コンタクト／Inner contact
=A-B

外部コンタクト／Ground contact
=D-C

図 1. 接触抵抗
(Fig.1 Contact Resistance)

5.2 VSWR 測定方法／Measuring method of VSWR

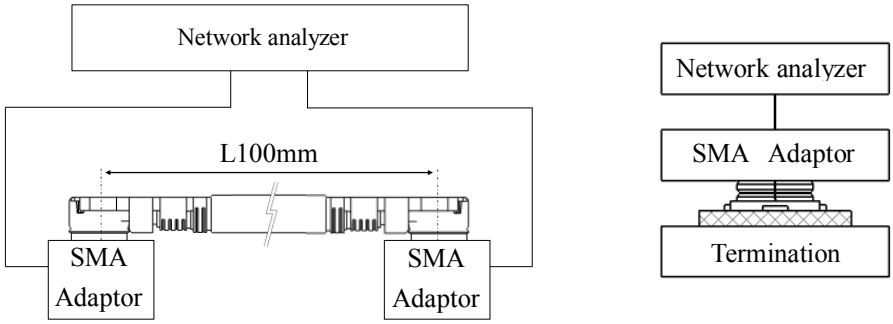

図 2. VSWR
(Fig.2 VSWR)

5.3 30 度引張測定方法／Measuring method of Cable retention force at 30 degree

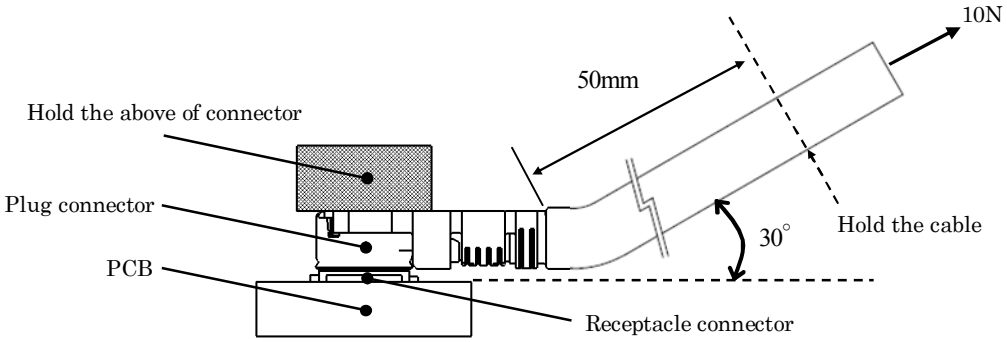

図 3. 30 度引張
(Fig.3 Cable retention force at 30 degree)

DOCUMENT CLASSIFICATION	TITLE	No.
PRODUCT SPECIFICATION 製品規格	MHF4L Connector Plug Parts No. : 20565-001R-13,20572-001R-08 Receptacle Parts No. : 20579-001E-01	PRS-1907

5.4 水平引張測定方法／Measuring method of cable retention force at 0 degree

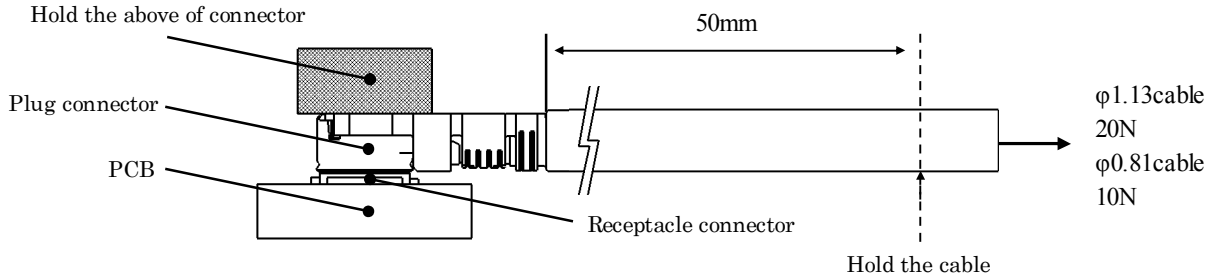

図 4. 水平引張

(Fig.4 Cable retention force at 0 degree)

5.5 半田剥離強度測定方法／Measuring method of receptacle shearing strength

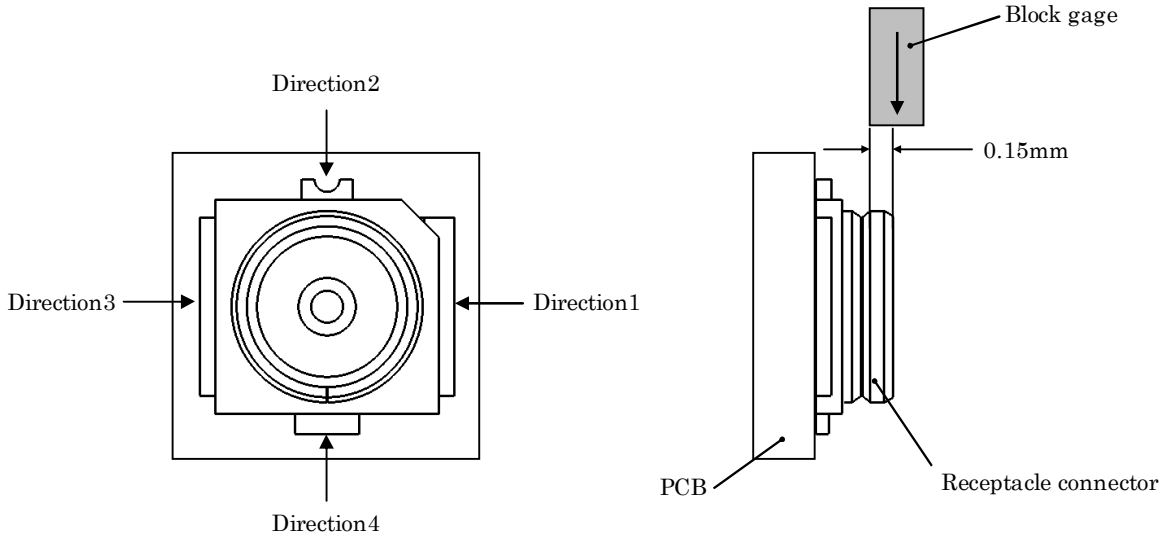

図 5.半田剥離強度

(Fig.5 Receptacle shearing strength)