Manufacturer: Guangzhou Coyote Intelligent Equipment Co., Ltd.

ADD: Part 1 of 3rd floor, No. 45-2, Northern Industrial Road, Xinlou village, Baiyun District, Guangzhou, China

Tel: +86 13751045466

Email: support@leaperkim.com

LeaperKim

Lynx-S

User Manual

1.Overview of the User Manual

Thanks for purchasing LeaperKim electric unicycle. We will wholeheartedly provide you with satisfactory products and services.

This vehicle is strictly prohibited to drive on the motorway. It must be confirmed that it meets the requirements of local laws and regulations. Do not use this product in the areas prohibited by laws and regulations. Do not use this product at the speed specified by local laws and regulations.

In order that you can ride the LeaperKim electric unicycle more safely, please carefully read and understand all the product information and precautions listed in this manual before riding, and refer to the instruction to operate LeaperKim electric unicycle.

Please maintain the vehicle regularly, which will help to keep the performance and resale value of the vehicle product.

Please keep this manual for future after-sales use.

Your satisfaction with the Leaper Kim electric unicycle is our driving force!

Guangzhou Coyote Intelligent Equipment Co., Ltd.

Catalogue

1. Overview of the User Manual.....3

2. Description of Product.....4

2.1 Function Schematic.....4

2.2 Product Size Drawing.....5

2.3 Specification.....6

2.4 Packing List.....7

3. Function Introduction.....8

3.1 Suspension Introduction.....8

3.2 Trolley Handle and Seat.....9

3.3 Pedals.....10

3.4 Display Introduction.....11

3.5 Display Function Overview.....12-13

3.6 Usage Notice.....14

4. Maintenance.....15

5. Warranty.....16

2.2 Product Size Drawing

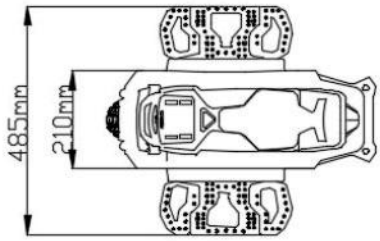

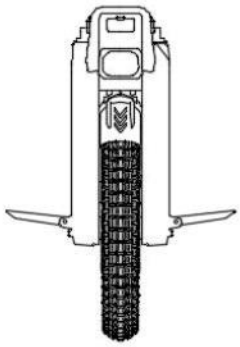

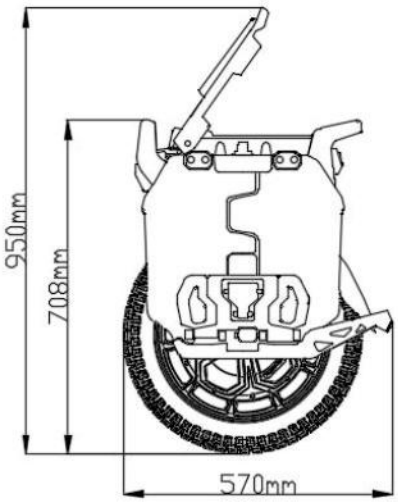

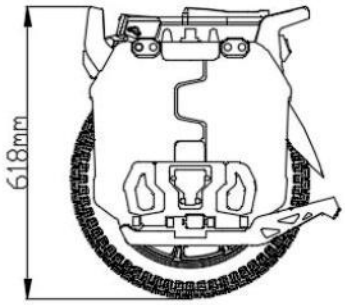

2. Description of Product

2.1 Function Schematic

2.4 Packing List

Packing list			
No.	Description	Unit	Qty
1	Unicycle	PCS	1
2	Charger	PCS	1
3	User Manual	PCS	1
4	Vehicle Information Card	PCS	1

2.3 Specification

Specification	
Item name	Lynx-S
Free-spin speed	100km/h
Safe speed	25km/h
Motor power	3000W
Battery	Samsug 50E 21700 3600wh，Overcharged，over discharged，charge port ouput short circut protection
Max gradibility	30°
Operating Temperature	-10℃~80℃
Max load	120kg
Charger	151.2V，5A
Charging time	3h-8h
Color	Black
Dimension and Weight	
Dimension and Weight	570mm*210mm*708mm
Net weight	44kg
Pedal size	130mm*280mm~130mm*330mm
Hardware	
Suspension	Mid-mounted normal suspension，preload adjustable，Compression 12 clicks，Rebound 18 clicks，Shock absorption stroke: 90mm
Pedal	Length adjustable
Control board	Double layer control board
Tire size	20inch
Trolley handle	Integrated trolley handle and seat
Display	Show speed, voltage，mileage，mode，battery status etc.
Charge port	Dual charge port support max 15A
Headlight	2000lm 18W double lamp beads
Taillight	Turning，braking warning light
Software	
Incline protection	Stop rolling once wheel body inclining 45°
Speed limit	Setable via display
Low battery protection	Alarm at 78V，tilt back at 75.6V
Overheat protection	Control system 85 degrees，power system 100 degrees
Other functions	Unique functionsetting module，mutiple functions can be adjustable，to meet differert user needs powerfu informationdisplay module,provide more detailed data,excellent system log module，record importart everts inoperation

3.2 Trolley handle and seat

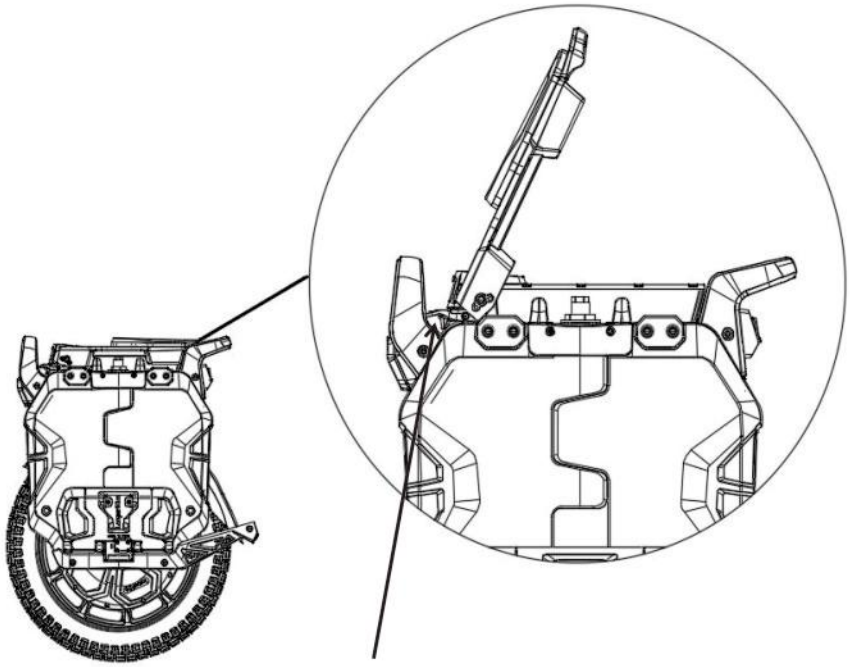

Move pick upward to switch seat and trolley handle.

Function introduction:

- Seat and trolley handle switching.

3. Function Introduction

3.1 Mid-mounted normal suspension

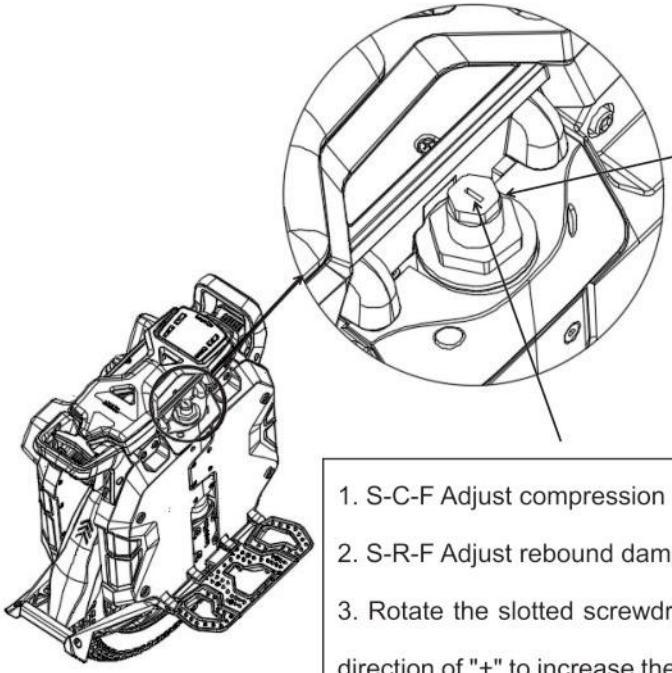

1. Spring preload adjustment;
2. The 18mm wrench is rotated in the "+" direction to increase the preload;
3. The scale marks on the left / right sides shall be consistent.

1. S-C-F Adjust compression damping;
2. S-R-F Adjust rebound damping;
3. Rotate the slotted screwdriver in the direction of "+" to increase the damping.

Function Introduction:

- Compression 12 clicks;
- Rebound 18 clicks;
- 12mm preload adjustable.

3.4 Display introduction

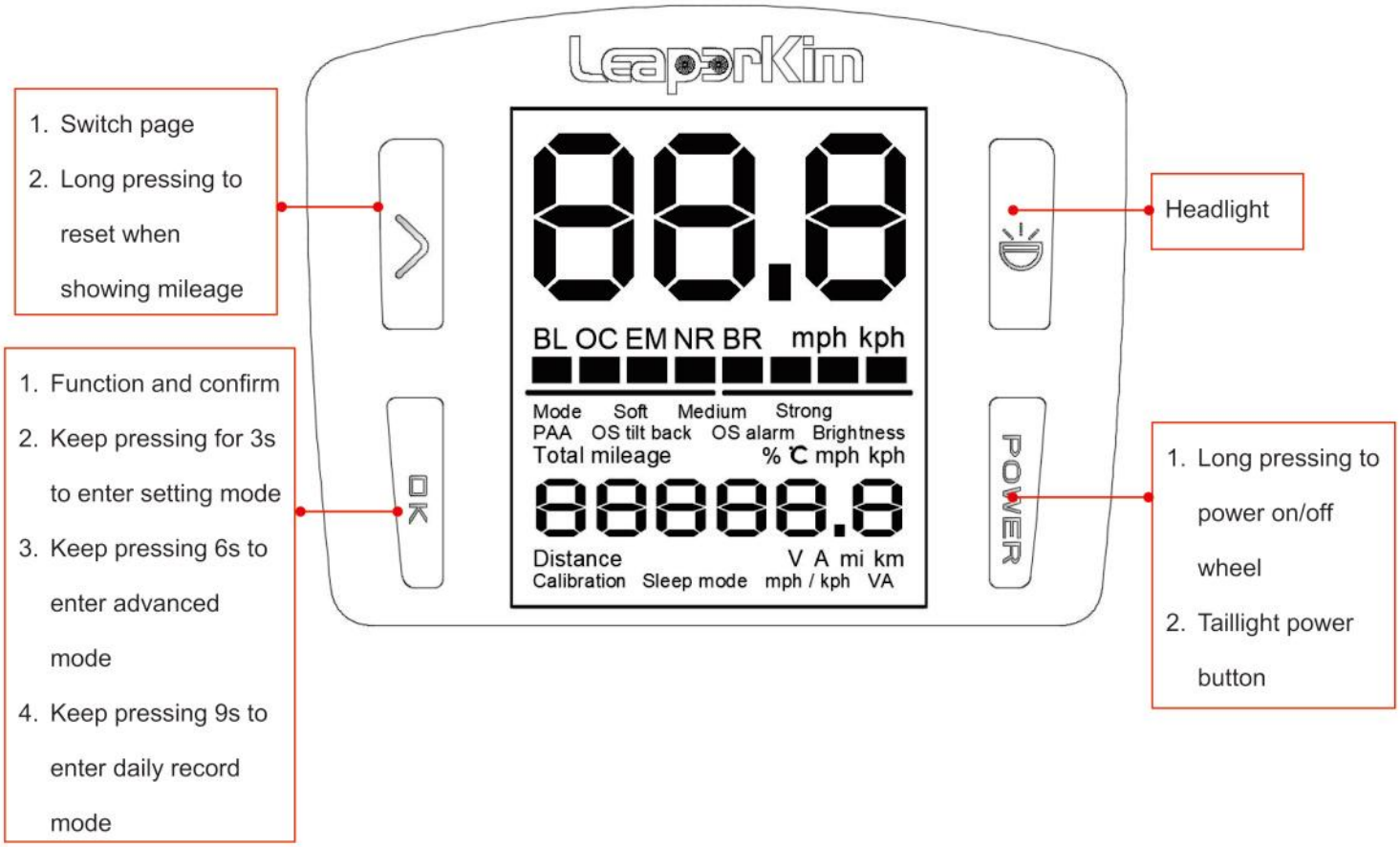

3.3 Pedals

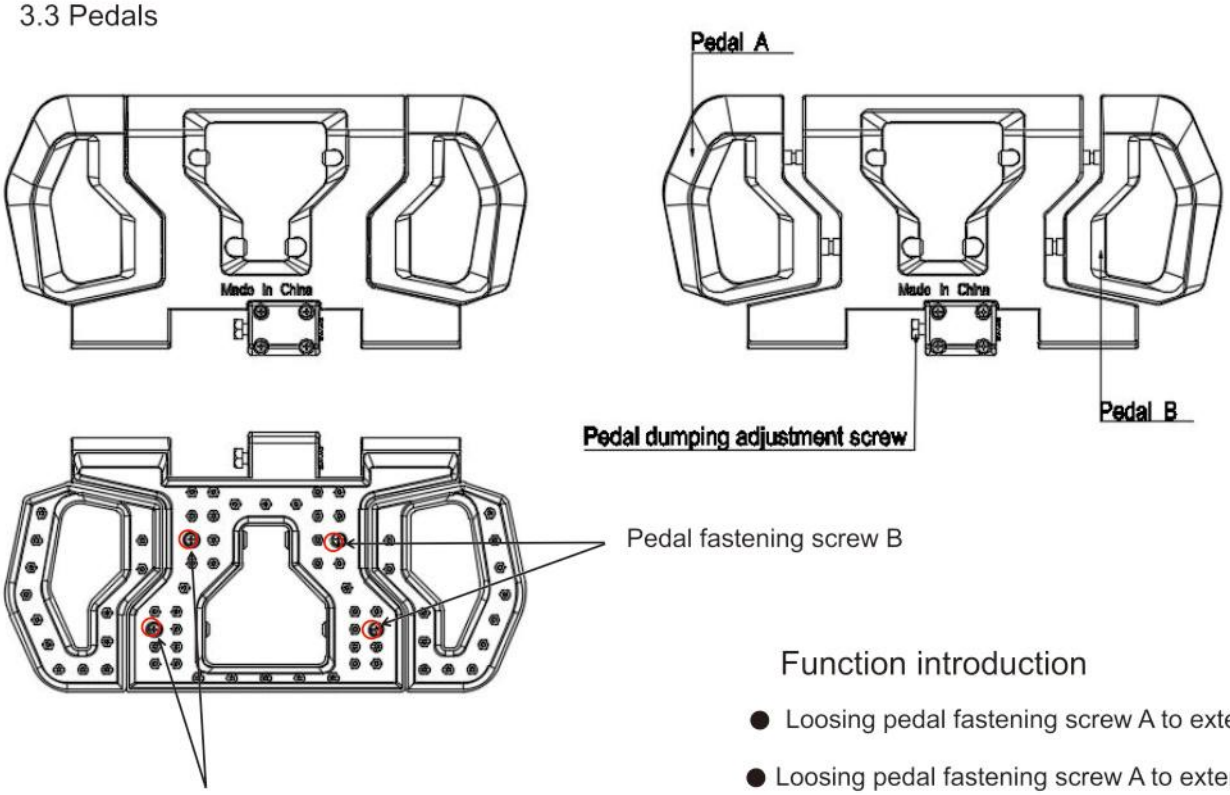

Function introduction

- Loosing pedal fastening screw A to extend pedal outward;
- Loosing pedal fastening screw A to extend pedal outward;
- Moderate pedal opening / closing angle can be adjusted by right turning the pedal damping screw.

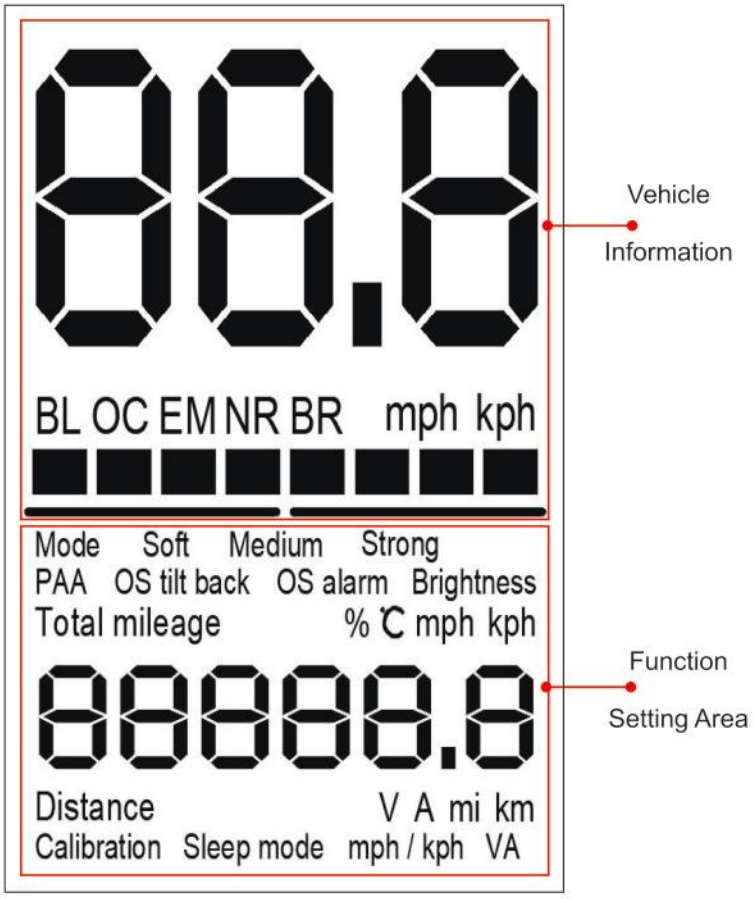

Function Setting Area

Icon	Meaning	Specification
Mode	Riding mode setting	Showing and setting the riding mde
Soft	Soft mode	
Medium	Medium mode	
Strong	Strong mode	
PAA	Balance slight adjustment	Show and set the default hori zontal angle of the pedal
OS tilt back	Over-speed rocker	Show and set speed of tilt back
OS alarm	Over-speed alarm	Show and set speed of alarm
Brightness	Brightness setting	Set the brightness of the screen
Total mileage	Total mileage	
%	Percent	
℃	Celsius degree	Current temperature of control board
mph	Mile/h	Mile/hour
kph	Km/h	Km'hour
88888.8	Speed data	Speed display
Distance	Distance	Total miliage since last reset
V	V	Battery voltage
A	A	Motor phase current
mi	Mile	Mile
km	Km	Km
Calibration	Calibration	
Sleep mode	Sleep mode	
mph/kph	Kilometre	
VA	Voltage trim	Voltage slightly adjustable

3.5 Display Function Overview

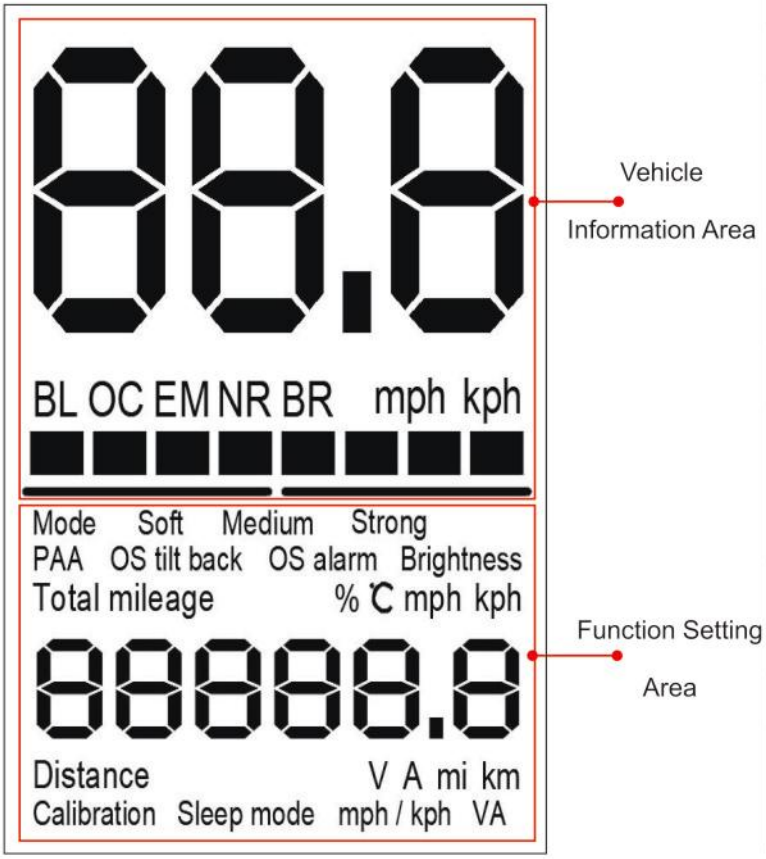

Vehicle Information Area

Icon	Meaning	Specification
88.8	Speed	
BL	Left side battery pack	On: Overcharged Flash: over discharge
OC	Over current warning	Off: normal
EM	Motor error	Off: normal
NR	Motor stall	Off: normal
BR	Right side battery pack	On: Overshoot Flash: over discharge Off: normal
mph	Mile/h	
kph	Km/h	
▪▪▪▪▪▪	Capacity	
—— ——	Left and right battery communication situation	On: normal Flash: signal lost

behavior suggested in this manual to avoid unnecessary loss and injury, otherwise you need to bear all the consequences arising therefrom.

●During the production or sales of this product, design changes and further improvement will be carried out continuously. In case of any discrepancy with this manual, please refer to the actual product.

4. Maintenance

● Use this product frequently, and check whether the screws are loose on time.

● Check the tire pressure on time. The suggested pressure is 2.5-3.0bar.

● Better to put the vehicle in the dry area.

● Charge the battery to full charge at least once every two months.

● Avoid recharging when the battery is completely exhausted.

● Avoid placing the battery in the environment which is above 50 ℃ or below - 20 ℃.

● It is prohibited to use chargers other than the standard charger for charging.

● It is forbidden to immerse this product in water and wash it with high-pressure water gun.

3.6 Usage Notice

● The following persons are prohibited from riding this product:

1. Persons who are under the influence of drugs or alcohol and have limited mobility and reaction ability. Or people with hypertension, cardiovascular and cerebrovascular diseases or other high-risk diseases.

2. Minors under 14 years old, pregnant women, mentally ill and the elderly over 60 years old.

● Do not use this product in the dark or in the places where the sight is blocked, or on the slippery, ponding, pothole and other roads.

● Do not ride it at high speed or accelerate or decelerate sharply when the battery capacity is low.

● Do not perform any dangerous actions (jumping, one foot riding, reversing, carrying people, over-speed riding, etc.

● Please wear helmet, knee protection, elbow protection, gloves and other protective equipment before riding this product.

● Where there are people or obstacles, please control the speed reasonably and prohibit speeding.

● This product is not allowed to be disassembled or repaired by un-professional personnel. If the machine is disassembled by oneself, the product warranty service will no longer be enjoyed.

● If the vehicle makes alarms, please stop riding it immediately and sent to the professional maintenance point for maintenance in time.

● Please carefully read and understand all the product information and precautions listed in this manual and follow the use

- The following conditions are not covered by the warranty and need to pay for maintenance.
- The validity period of three guarantees has expired.
- Damage caused by human factors.
- Damage caused by force majeure.
- All kinds of damage caused by failure to use, maintain and transform according to the requirements of the user manual.
- Failure or damage caused by forced use of this product beyond normal conditions.
- The product has been disassembled or maintained by personnel not authorized by our company.
- Malicious damage to warranty content and vehicle body information.
- Other faults or damages not caused by the design, technology, quality, manufacturing and other problems of the product itself.
- Natural wear and tear that does not affect the function.

5. Warranty

NO.	Items	Warranty time
1	Controller, motor	1 year
2	Battery packs	6 month
3	Charger	3 month

FCC Caution.

§ 15.19 Labelling requirements.
This device complies with part 15 of the FCC Rules. Operation is subject to the following two conditions: (1) This device may not cause harmful interference, and (2) this device must accept any interference received, including interference that may cause undesired operation.

§ 15.21 Information to user.
Any Changes or modifications not expressly approved by the party responsible for compliance could void the user's authority to operate the equipment.

§ 15.105 Information to the user.
Note: This equipment has been tested and found to comply with the limits for a Class B digital device, pursuant to part 15 of the FCC Rules. These limits are designed to provide reasonable protection against harmful interference in a residential installation. This equipment generates uses and can radiate radio frequency energy and, if not installed and used in accordance with the instructions, may cause harmful interference to radio communications. However, there is no guarantee that interference will not occur in a particular installation. If this equipment does cause harmful interference to radio or television reception, which can be determined by turning the equipment off and on, the user is encouraged to try to correct the interference by one or more of the following measures:
-Reorient or relocate the receiving antenna.
-Increase the separation between the equipment and receiver.
-Connect the equipment into an outlet on a circuit different from that to which the receiver is connected.
-Consult the dealer or an experienced radio/TV technician for help.
This equipment complies with FCC radiation exposure limits set forth for an uncontrolled environment. This equipment should be installed and operated with minimum distance 0cm between the radiator and your body.