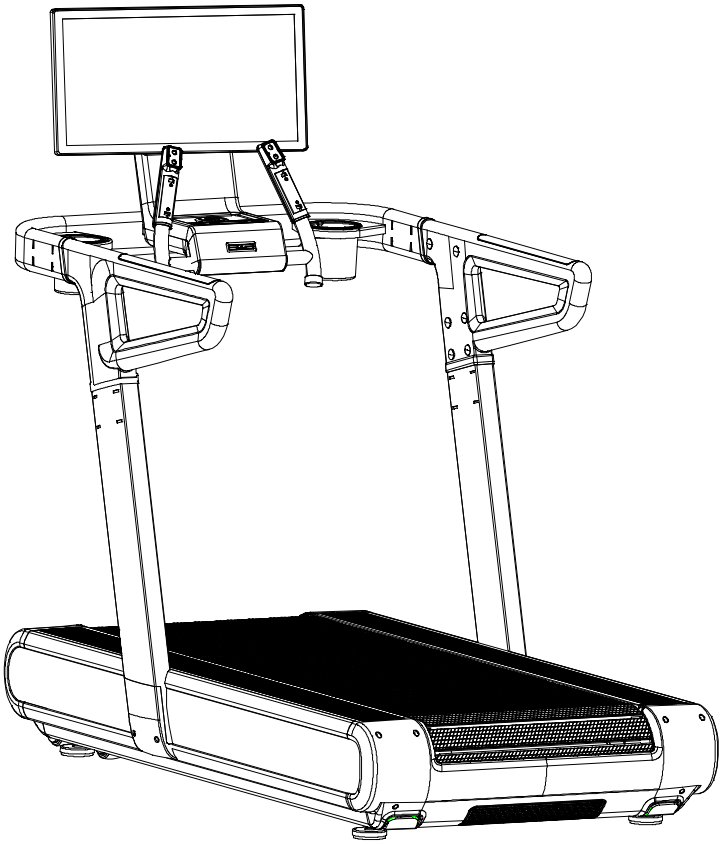

Retain this owner's manual for future reference

Read and follow all instructions in this owner's manual

Version A

- **Safety precaution**
- **Note:** please read the instructions carefully before use and pay attention to the followings.
- The owner of the product is responsible for ensuring that all users are fully aware of all warnings and cautions of the product. Moreover, using the product in strict accordance with the instructions.
- Before using the treadmill, please check whether the treadmill is placed steadily.
- Keep children and pet away from the treadmill to avoid any accident. Avoid leaving children alone in a room with a treadmill
- Make sure the treadmill has been properly assembled and the screws in all parts have been locked before use.
- The treadmill should be placed on a flat surface. It is recommended to place the treadmill on a floor mat to prevent damage to the floor or carpet.
- The treadmill should be kept indoors to prevent moisture and dust. Sharp objects should not be placed around it.
- When using the fitness device, wear comfortable clothing and preferably sports or aerobic shoes. Do not wear robes or other clothing that may trip over the equipment.
- Do not put your body near the running machine to prevent injuries.
- Do not set speed too fast to avoid falling and injury.
- Do not use the treadmill if it is found working abnormally.
- Only one person on the treadmill, overload is prohibited.
- If you feel uncomfortable or abnormal during exercising, stop immediately and consult your GP

Pay attention to the following safety matters:

- The treadmill should be placed indoors to avoid moisture. Water should not be splashed on the treadmill. Any sundries should not be placed on it.
- Please wear sportswear and sports shoes before exercise.
- Keep children away from the machine to avoid accidents.
- No overloading operation for a long time to avoid accelerating the wear and aging of bearing, fixed belt. Make regular maintenance
- Keep good air circulation when running.
- There should be 2000x1000mm safe space at the end of treadmill when running
- If you feel uncomfortable during exercising, stop immediately and consult your GP
- Don’t jump off the treadmill directly after the exercise to avoid dangerous consequences.

- Stop the machine if anything wrong and cut the power immediately
- Ask local distributor to handle any issue or provide service. Dismantle the components personally is not allowed.

Warning: to reduce accidents and injuries, please follow the following rules:

- Check whether the garment is fastened or zipped up before running on the treadmill
- do not put any sharp objects or sundries around the treadmill
- When in abnormal condition, hold the side handrail to pull-up and jump away from the outside of the treadmill.
- Don't use the treadmill outdoors.
- Non-professional personnel shall not open shield and roller
- Only one person is allowed to exercise on the treadmill at one time.
- If you feel dizziness, chest pain, nausea, or shortness of breath during exercise during exercising, stop immediately and consult your GP.

Warning!

Prohibit!

- Following patients under treatment need to get use of the treadmill after approval of professional doctor.

(1) The person with backache or used to get hurt in the leg, waist or neck. Those with numbness of legs, waist, neck or hands (those with chronic diseases such as inter-vertebral disc protrusion, spinal slip, cervical vertebra protrusion, etc.)

(2) The patient with deformation arthritis , rheumatism or gout .

(3) The patient with osteoporosis.

(4) The patient with a bad circulatory system like heart disease, vascular disorders and vascular hypertension .

(5) The patient with respiratory disturbance.

(6) The patient with Artificial heart rhythm problem.

(7) The patient with malignant tumors.

(8) The patient with thrombosis .

(9) The patient with diabetic-caused perceptual disturbance.

(10) The person with skin injury .

(11) The patient with a high fever above 38℃.

(12) The person with bent back bone.

(13) The person with pregnancy or in (menstrual) period.

(14) The person feels uncomfortable .

(15) The person is obviously in a bad condition.

(16) The person for the purpose of rehabilitation.

(17) The person having abnormal physical features.

Above cases may cause accident or health issue.

◆Stop exercising immediately if you feel painful from your joints or muscles, dizziness, numb, and abnormal heart beat, please consult doctor as soon as possible.

◆Keep children away from this product.

- Children may get hurt if you ignore this

◆During using, taking out, putting back or moving this product, please make sure there is nobody or pets around.

Prohibit !

Stop using this product when the cover cracked (inner parts come out) or welded parts drop off.

-may cause danger or injury.

◆ Do not jump up or down from the treadmill when running.

- may fall down and get injury.

◆ Do not use or reserve the treadmill outdoor or near bathroom to avoid water.

◆ Do not use or reserve the treadmill in the area exposed to direct sunlight, and avoid high temperature besides electric blanket and heater.

- may cause electric leakage or fire.

◆ Only for one person at a time, tell people around not too close.

- may fall down and cause injury.

◆ people who is not conscious or can’t operate by himself can not use the treadmill.

- may cause accident or get injury.

◆ disassemble, repair, change by customer themselves are forbid absolutely.

- may cause mechanical breakdown and injury.

To avoid water !

◆ Do not exercise too much if you are not a regular sportspeople.

◆ Do not use the treadmill directly after meals or when you feel exhausted.

- may cause damage to your health.

◆ Do not use the treadmill directly after meals or when you feel exhausted.

- may cause damage to your health.

◆ This product is suitable for family and gym. Not suitable for places with a large number of non-specific users such as schools, gyms, etc

◆ Do not use the product while you are having meals or doing other activities

◆Don't use the treadmill after drinking

◆ Do not use the product when you have hard object in your pocket.

- may cause accident or injury.

Explosive drawing

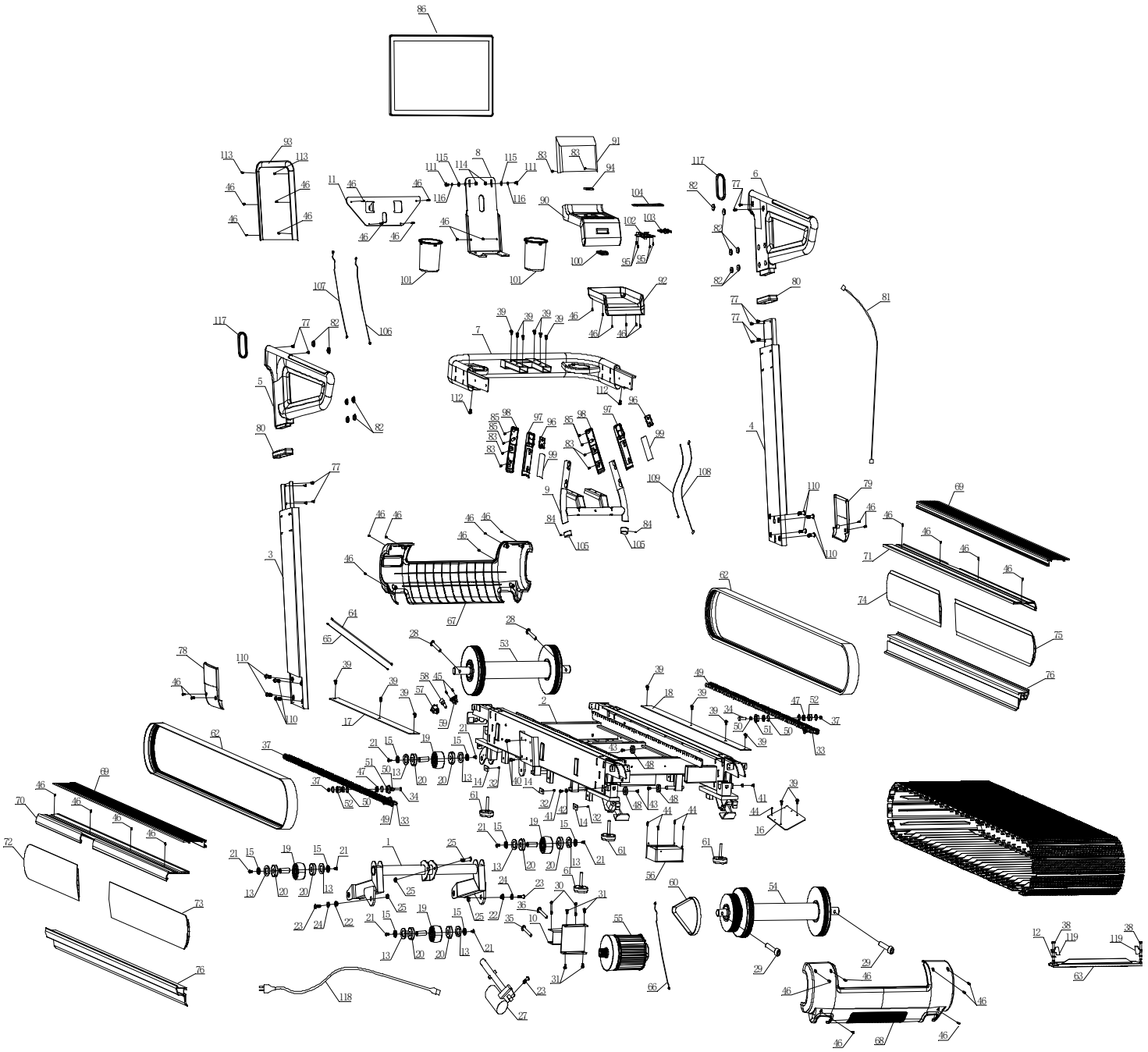

Part list

No.	Description	Qty	No.	Description	Qty
1	Incline frame	1	60	Motor belt 270PJ10	1
2	Main frame	1	61	Universal foot pad	4
3	Left upright	1	62	Lateral belt	2
4	Right upright	1	63	Slat	60
5	Left handlebar	1	64	Power connection cable	1
6	Right handlebar	1	65	Power connection cable	1
7	Console frame	1	66	Communication wire L-500mm/5PIN	1
8	Console fixed plate	1	67	Front guard cover	1
9	Handle grip	1	68	Rear guard cover	1
10	Motor fixed seat	1	69	Non-slip plate	2
11	Console neck plate	1	70	Left upper side rail	1
12	Washer	120	71	Right upper side rail	1
13	Bearing gasket	8	72	Left front side rail	1
14	Connecting threaded plate	6	73	Left rear side rail	1
15	Outer end cap	8	74	Right front side rail	1
16	Dustproof plate	1	75	Right rear side rail	1
17	Left main frame baffle	1	76	Lower side rail	2
18	Right main frame baffle	1	77	Allen full thread bolt	12
19	Wheel	12	78	Left upright cover	1
20	Deep groove ball bearingR12Z	14	79	Right upright cover	1
21	Allen full thread bolt M6×15	8	80	Upright sleeve	2
22	Powder metallurgy sleeve Φ22	2	81	Communication wire	1
23	Allen half thread bolt M10×35×20	3	82	Hole plug	12
24	Flat washer Φ10	2	83	Philips self-tapping screw ST3×10	6
25	Hex lock nut M10	3	84	Allen headless full thread bolt M4×3	2
26	Allen half thread bolt M10×65×20	1	85	Philips self tapping screw ST2.5×8	4
27	Incline motor	1	86	Philips self tapping screw ST4×15	12
28	Allen full thread bolt M12×110	2	87	LED panel overlay	1
29	Allen full thread bolt M12×60	2	88	Display frame	1
30	Allen half thread bolt M10×70×20	2	89	Panel back cover	1
31	Allen full thread bolt M8×20	4	90	Upper console cover	1
32	Allen full thread bolt M6×30	6	91	Upper console cover 2	1
33	Allen full thread bolt M8×30	90	92	Lower console cover	1
34	Allen full thread bolt M8×45	18	93	Console neck cover	1
35	Allen full thread bolt M8×55	1	94	Wireless charging pad	1
36	Allen full thread bolt M8×80	1	95	Philips self tapping screw ST4×12	4

37	Hex lock nut M8	108	96	Handgrip keypress	2
38	Hex lock nut M5	240	97	Front pulse cover	2
39	Allen full thread bolt M8×15	8	98	Rear pulse cover	2
40	Allen full thread bolt M8×15	4	99	Pulse sensor	2
41	Allen full thread bolt M8×30	2	100	Wireless charging fixed part	1
42	Hex nut M8	2	101	Water bottle	2
43	Allen full thread bolt M6×15	4	102	Safety key plate	1
44	Allen full thread bolt M4×16	5	103	Safety key	1
45	Philips self tapping screw ST3×10	2	104	Silicone pad	1
46	Philips self tapping screw ST4×16	36	105	32 outer end cap	2
47	Bearing	126	106	Communication wire L-900mm	1
48	Deep groove ball bearing	4	107	Handgrip wire L-600mm	1
49	Sleeve Φ12×Φ8.1×7	126	108	Safety key wire L-500mm	1
50	Elastic circlip for hole Φ23	54	109	Keypress wire L-500mm	1
51	Guiding wheel Φ34×Φ26×Φ22×13	18	110	Allen half thread bolt M10×30×20	8
52	Bearing sleeve Φ26×Φ22×12	18	111	Allen half thread bolt M8×30×20	4
53	Front roller	1	112	Allen full thread bolt M8×20	2
54	Rear roller	1	113	Philips full thread bolt M4×10	2
55	Servo motor	1	114	Hex lock nut M8	2
56	Controller	1	115	Flat washer Φ8	2
57	Power switch	1	116	Elastic washer Φ8	2
58	Fuse	1	117	Handlebar sleeve	2
59	Power socket	1	118	Power cord	1

FCC Radiation Exposure Statement:

This equipment complies with FCC radiation exposure limits set forth for an uncontrolled environment. This equipment should be installed and operated with minimum distance 20cm between the radiator & your body.

FCC Warning

This device complies with Part 15 of the FCC Rules. Operation is subject to the following two conditions:
(1) This device may not cause harmful interference, and (2) this device must accept any interference received, including interference that may cause undesired operation.

Note: This equipment has been tested and found to comply with the limits for a Class B digital device, pursuant to part 15 of the FCC Rules. These limits are designed to provide reasonable protection against harmful

interference in a residential installation. This equipment generates, uses and can radiate radio frequency energy and, if not installed and used in accordance with the instructions, may cause harmful interference to radio communications. However, there is no guarantee that interference will not occur in a particular installation. If this equipment does cause harmful interference to radio or television reception, which can be determined by turning the equipment off and on, the user is encouraged to try to correct the interference by one or more of the following measures:

—Reorient or relocate the receiving antenna.

—Increase the separation between the equipment and receiver.

—Connect the equipment into an outlet on a circuit different from that to which the receiver is connected.

—Consult the dealer or an experienced radio/TV technician for help.

NOTE 2: Any changes or modifications to this unit not expressly approved by the party responsible for compliance could void the user's authority to operate the equipment.

Product profile

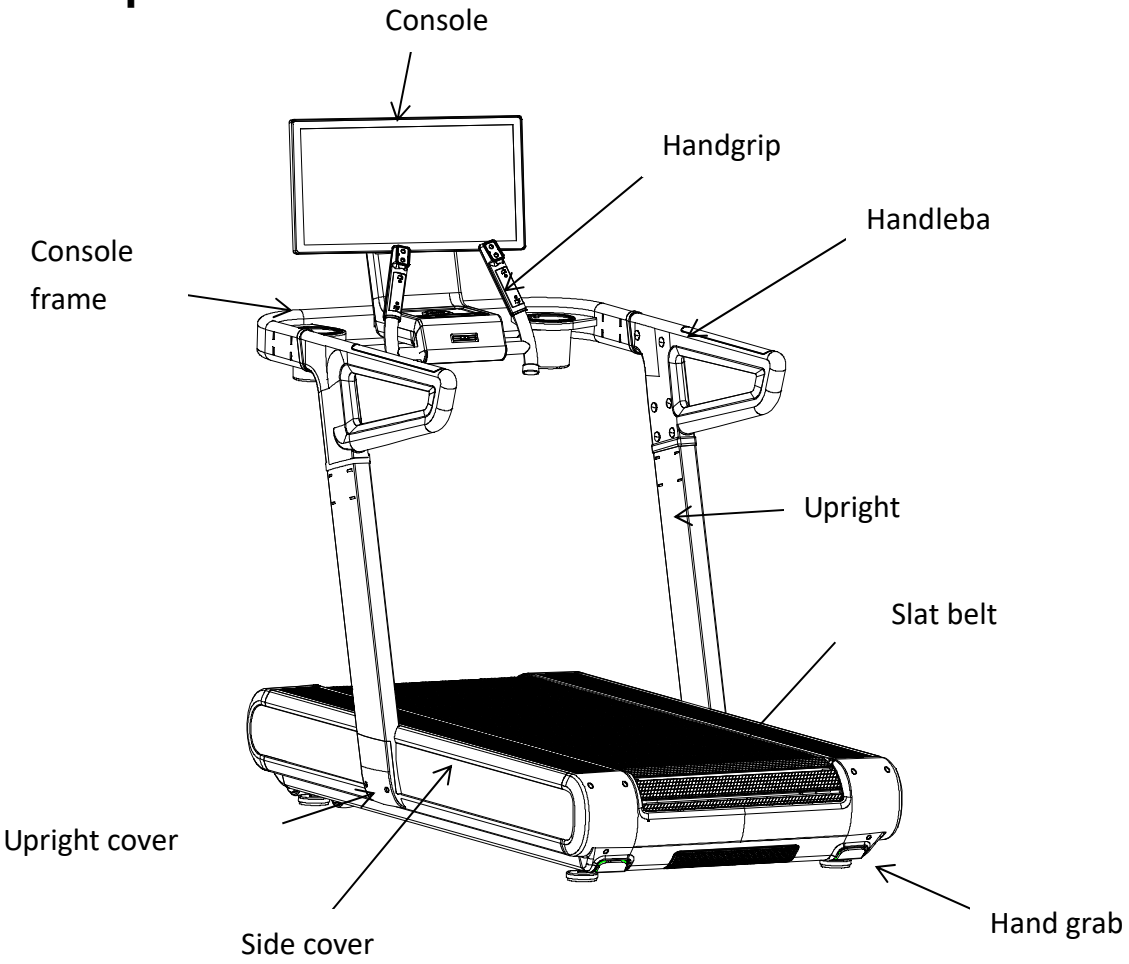

Technical parameters

Product size (unfold)	1853×8930×1680mm
Running surface	1600*550mm

Remark: We reserve the right for revision before prior notice.

Different views

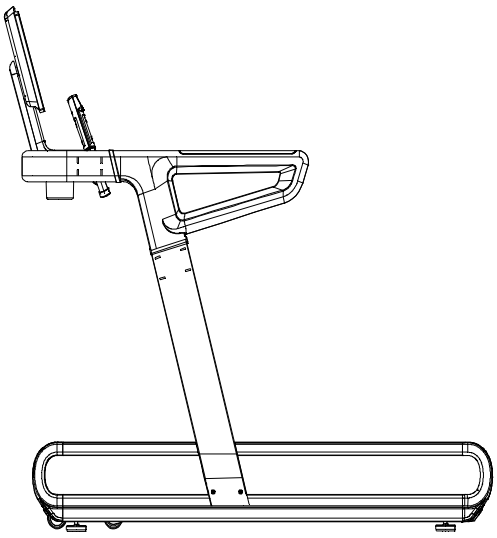

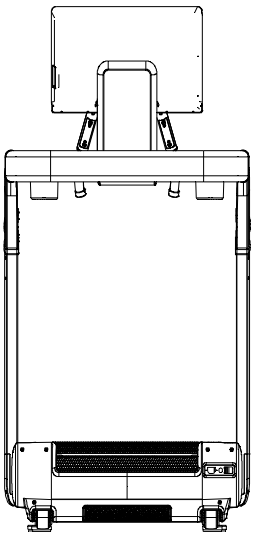

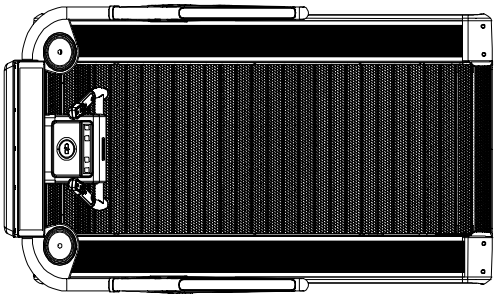

Part list

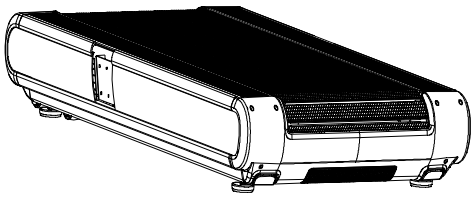

Base

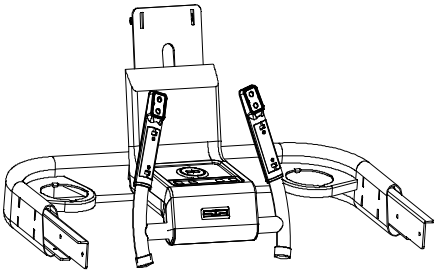

Console frame

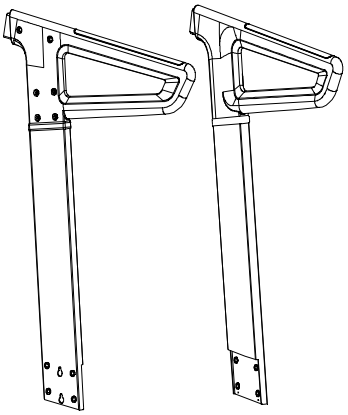

Upright

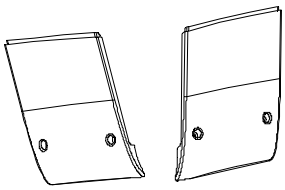

Upright cover

Console neck cover

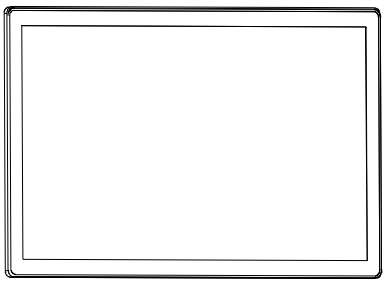

Console

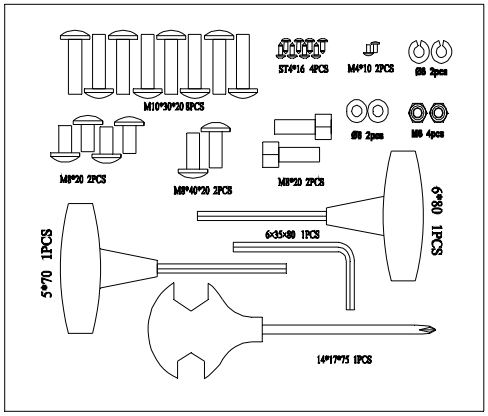

Hardware kit

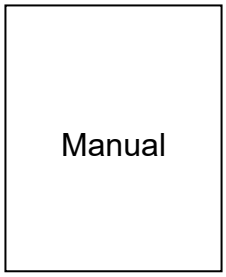

User manual

Hardware kit list

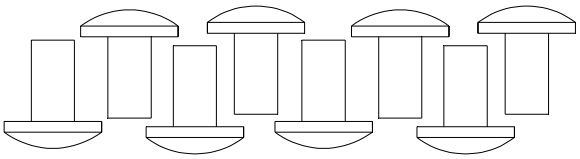

Allen half thread bolt（M10*30*20）8pcs

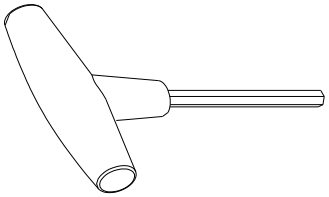

T-shaped wrench（6*80）1pcs

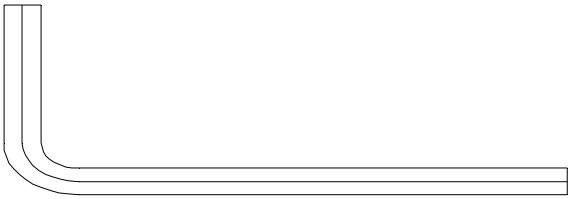

L-shaped wrench（6×35S×80）1pc

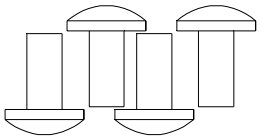

Allen full thread bolt（M8*20）4pc

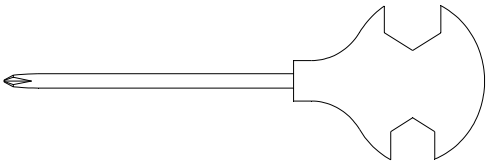

Cross open-end wrench (14*17*75) 1pc

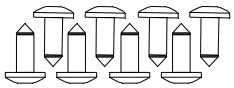

Screw（ST4*16）8pc

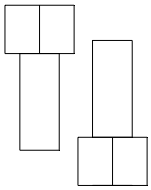

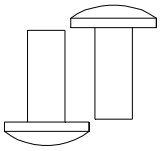

Allen full thread bolt（M8*20）2pc

Allen half thread bolt（M8*40*20）2pc

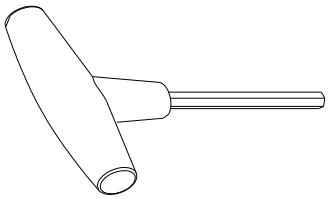

Allen full thread bolt（M4*10）2pc

T-shaped wrench（5*70）1pcs

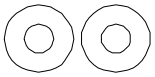

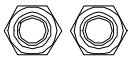

Flat washers（Φ8）2pc

Hexagon lock nut（M8）2pc

Spring washers (Φ8）2pc

Main part

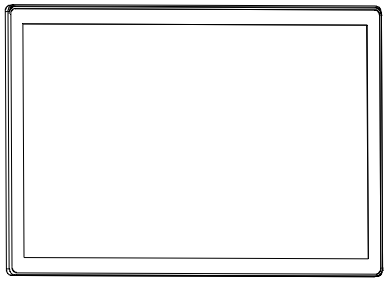

Console

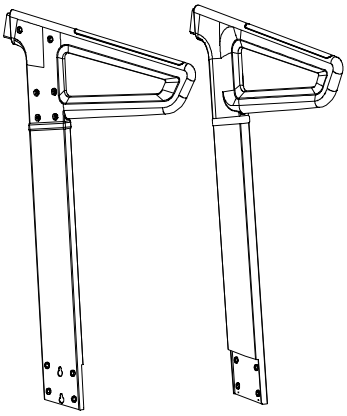

Upright

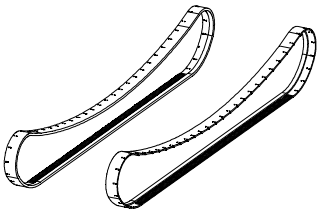

Lateral belt

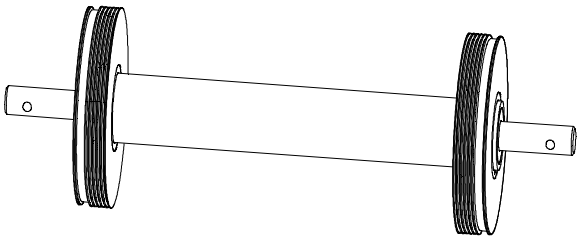

Front roller

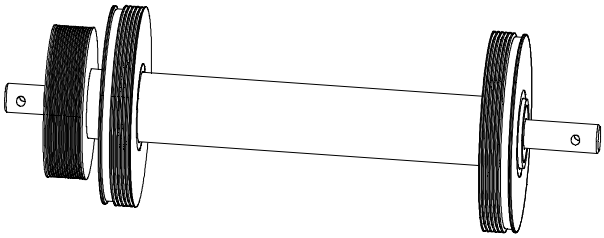

Rear roller

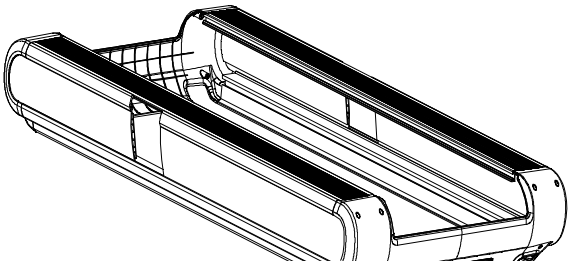

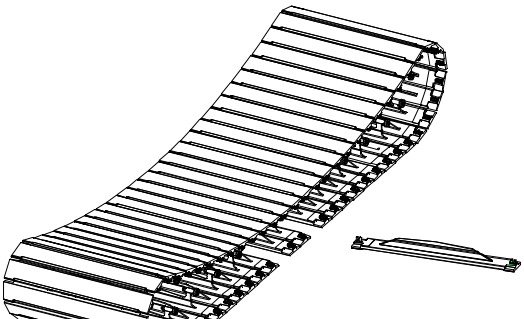

Slat belt

Main frame cover

Assembly steps

Step 1: Take the treadmill base out of the carton and place it on the level floor (as shown);

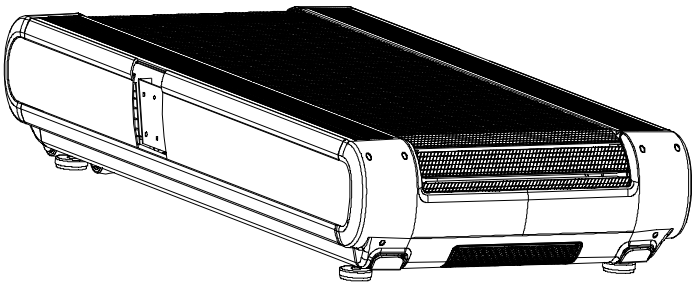

Step 2: First, connect the communication wire in the right upright, tuck the excess wire inside the upright compartment. Attach the right upright onto the right upright clamp ring by aligning the screw holes with 4pcs M10 * 30 * 20 bolt, but don’t tighten the bolts. Same assembly step for left upright, only without communication wire.