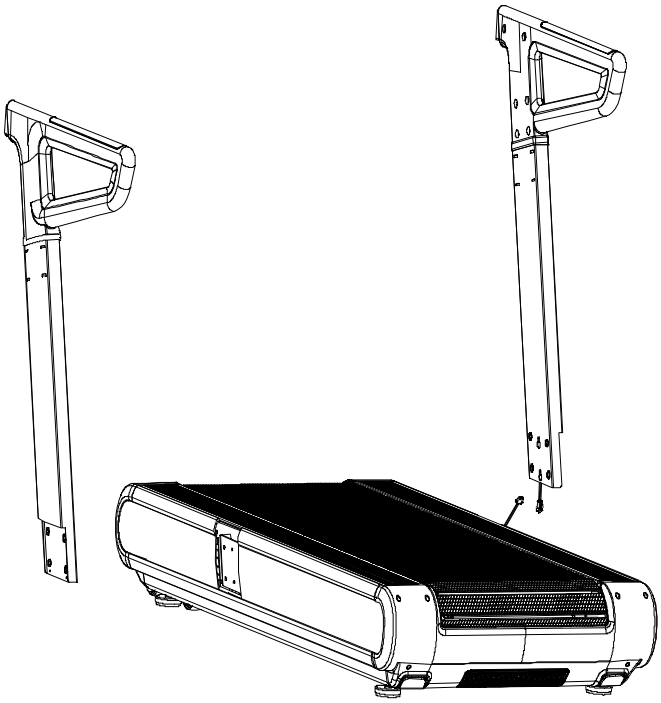

Step 3: As picture shown, connect the communication wire between console frame and handlebar, and tuck the excess wire into the handlebar. Insert the console frame clamp ring into the handlebar, align the hole and fix the inner side by 4ea M8 * 20 bolts, tighten the bolts and cover the hole plug; Then fix the handlebar from the bottom by 2ea M8 * 20 bolts. Tighten all upright bolts.

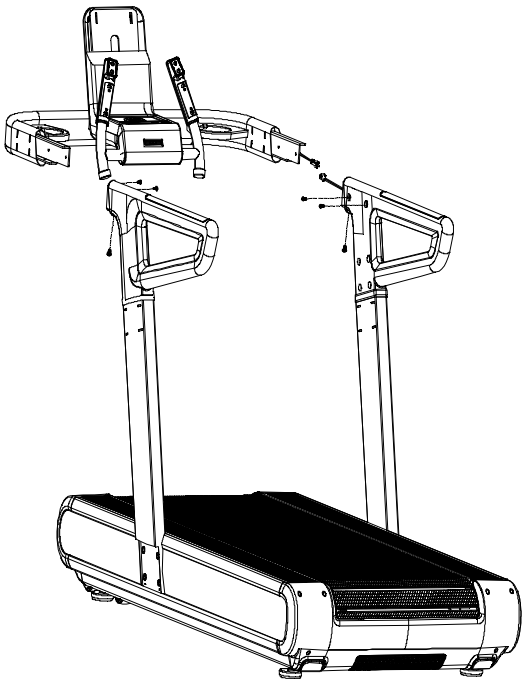

Step 4: take out the console from the packaging box, attach the console onto the console neck plate

by aligning the holes, feed 2ea M8 * 30 * 20 bolts through the flat washer Φ 8 and elastic washer Φ 8, and finally tighten with M8 nuts.

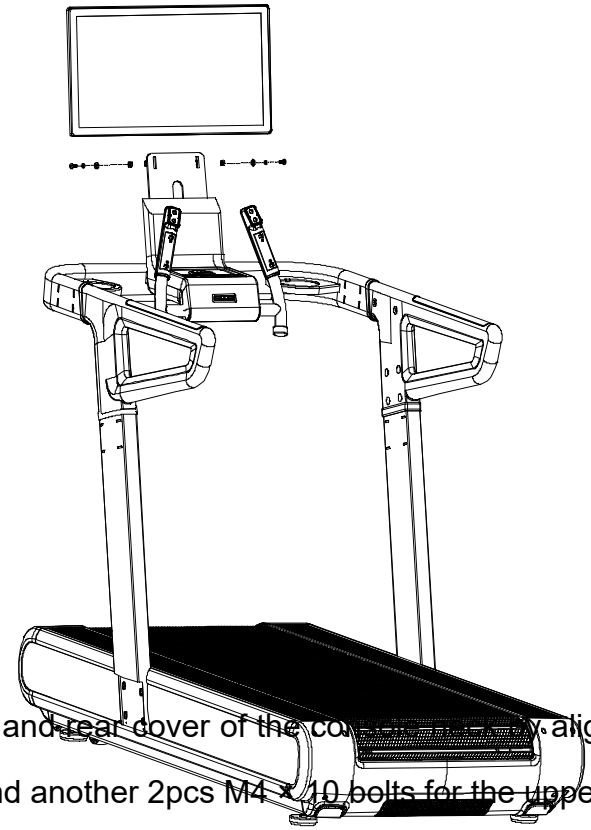

Step 5: As picture shown, fix front and rear cover of the co[illegible] aligning the holes, use 4pcs ST4 * 16 screws for the bottom, and another 2pcs M4 * 10 bolts for the upper. Then attach the upright cover to each upright by 4ea ST4 * 16 screws.

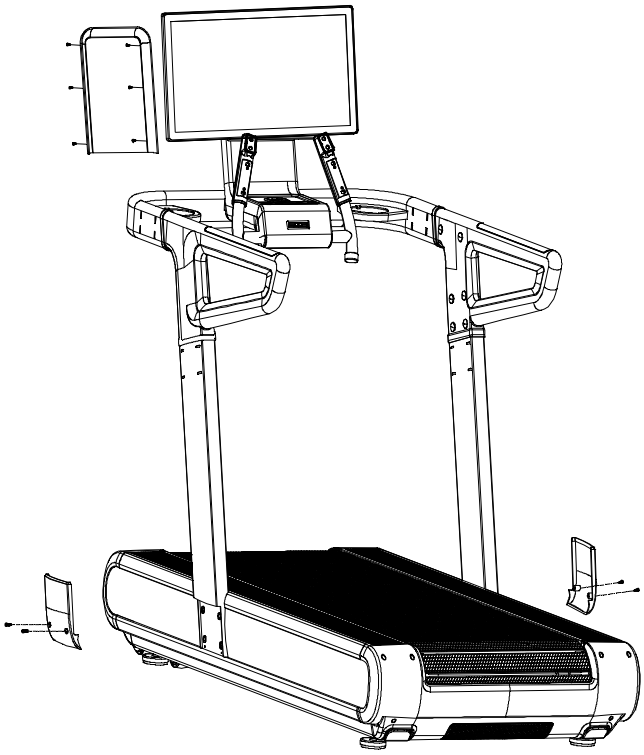

Step 6: the assembly is completed, as below picture.

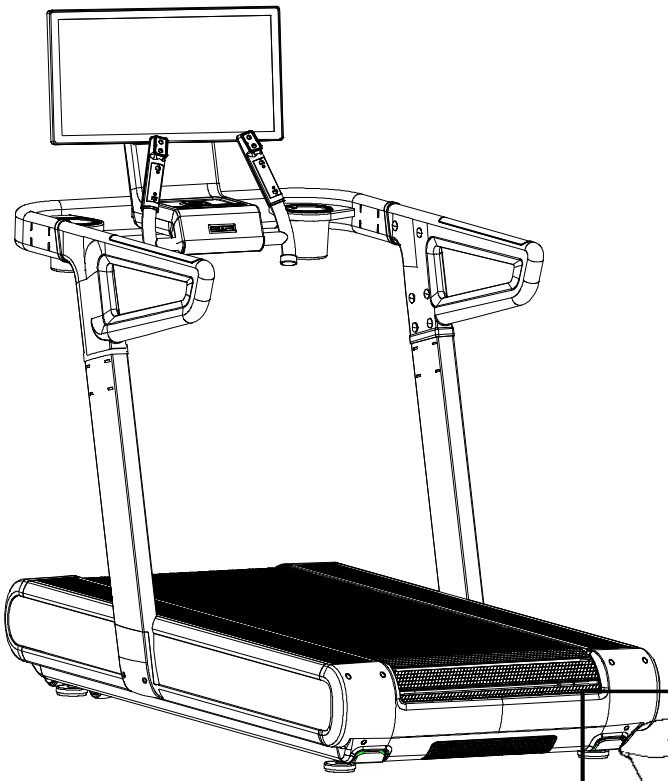

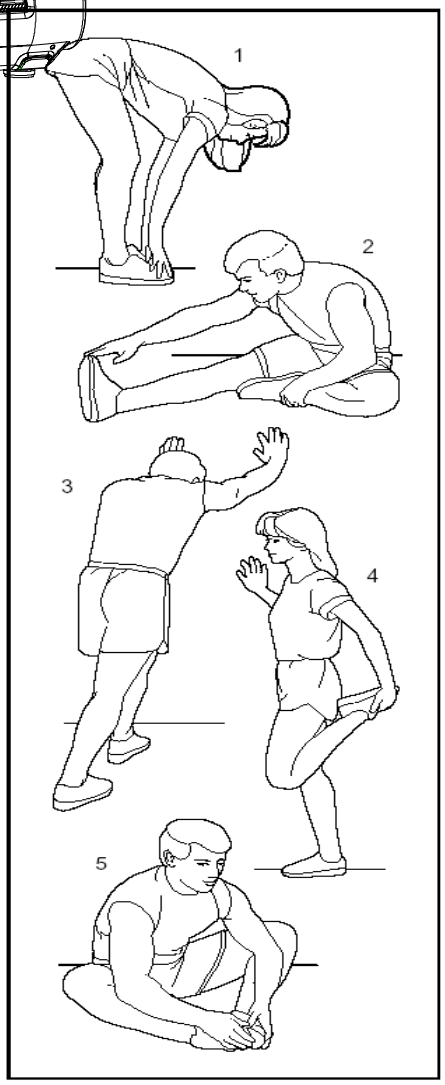

Exercising advice and guidelines

(a) Warm up

Warm up for 5-10 minutes before each session.

(2) Breathing

Do not hold your breath during operation. Breathe in through your nose and exhale forcefully through your mouth when preparing for the reduction of movement. Breath and movement should be coordinated.

(3) Frequency

The same muscle should be trained after 48 hours rest, which means every other day to train the same part.

(4) Load

Determine the amount of training according to the individual physical condition, soreness is normal at the beginning of training, but can be eliminated as long as you continue to practice.

(5) Relax

Relax 5 minutes after practicing every time, maintain muscle be strong and flexible.

(6) Diet

To protect digestive system, do not start exercising directly after meal. After training, user should not eat after exercise in half hour, do not drink

high volume of water during exercise, to avoid increasing burden of heart and kidney.

(7) Stretch

No matter how fast you're running, it's best to stretch first. Warm muscles are easier to stretch, so warm up by walking for 5-10 minutes first. Then stop and stretch as follows - five times, 10 seconds or more on each leg; Do it again after the workout.

1. Stretch down

With your knees slightly bent, slowly bend forward, allowing your back and shoulders to relax, and your hands to touch your toes. Hold for 10 to 15 seconds, then relax. Repeat 3 times (see figure 1).

2. Hamstring stretch

Sit on a clean cushion and straighten one leg. Bring the other leg in so that it is attached to the inside of the straight leg. Try to touch your toes with your hands. Hold for 10 to 15 seconds, then relax. Repeat 3 times with each leg (see figure 2).

3. Calf and heel stretch

Stand with two hands on a wall or tree and one foot behind. Keep your hind legs upright and your heels on the ground, leaning toward a wall or tree. Hold for 10 to 15 seconds, then relax. Repeat 3 times with each leg (see figure 3).

4. Quadriceps stretch

Balance with your left hand against a wall or table, then reach back with your right hand, grab your right ankle and slowly pull toward your hips until you feel tension in the muscles in front of your thighs. Hold for 10 to 15 seconds, then relax. Repeat 3 times with each leg (see figure 4).

5. Stretch the sartorial (the muscle on the inside of the thigh)

Sit with your feet facing each other and your knees facing out. Grab your feet with both hands and pull toward your groin. Hold for 10 to 15 seconds, then relax. Repeat 3 times (see figure 5).

Console introduction

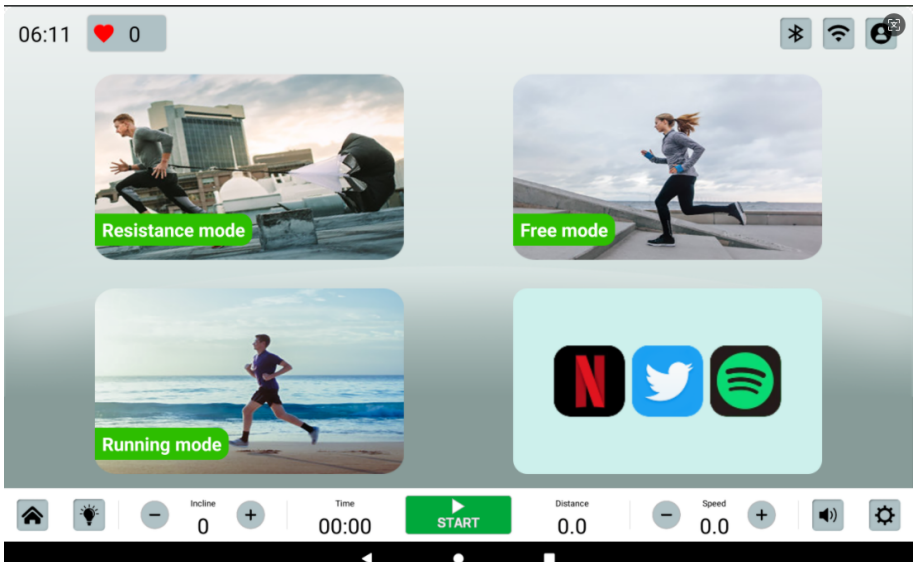

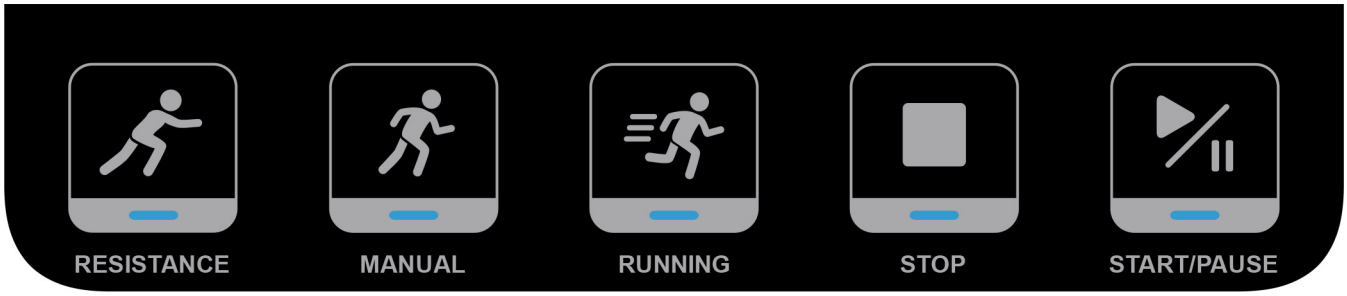

Console Function

1.1 P1-P36is a built-in automatic training program，one BMI；

1.2 23.8inch TFT color screen, 5 operation keys；

1.3 Speed, distance metric and imperial conversion function；

1.4 Operating speed range: km 1.0~22.0KM/H；

1.5 Incline range：0~15%；

1.6 Overload, overcurrent protection, explosion-proof, anti-speeding, anti-electromagnetic interference and other protection functions；

1.7 System self-test, abnormal message prompt function；

1.8 HRC function; (Optional)

1.9 Two-channel MP3 playback function；

Display instruction

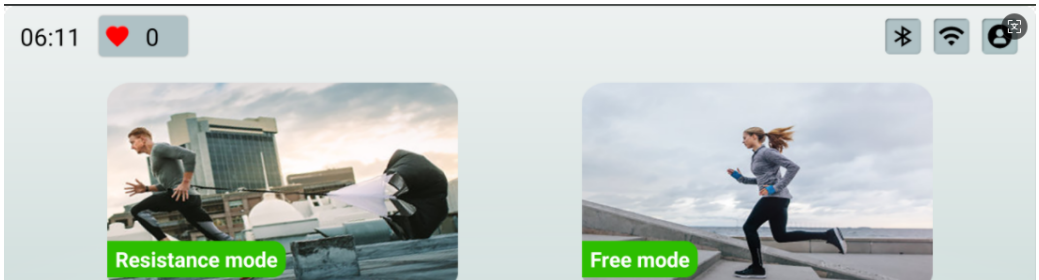

• Resistance mode: Displays the distance,select this mode, the reverse power resistance of the main motor is the lowest 5 gears, and the incline is 0 by default.

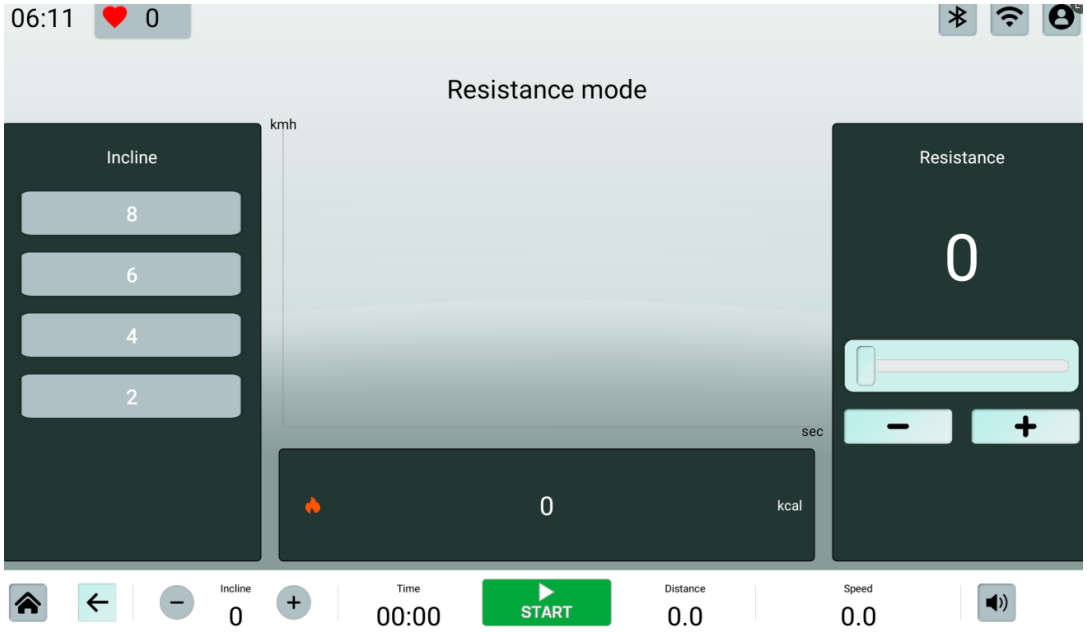

• Free mode: Select this mode, the lowest incline is 6 gears, and the main motor is not powered.

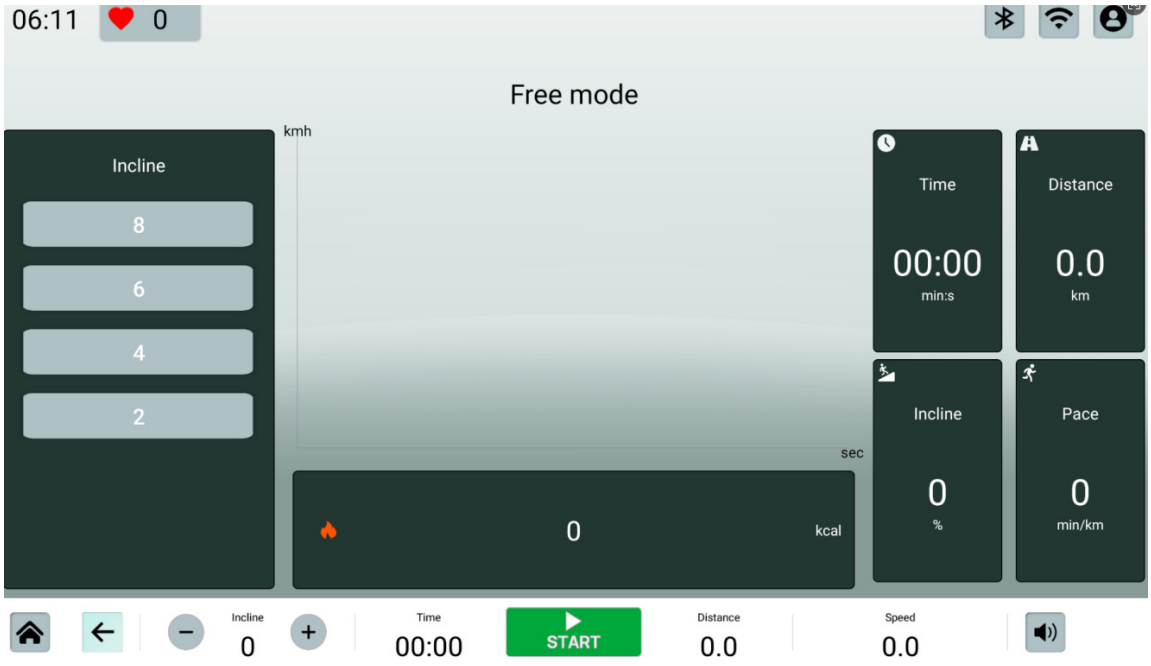

• Running mode:For treadmill mode, select this mode, the main motor power is driven by electronic control, the resistance is 1KM/H by default, and the slope is 0 by default.

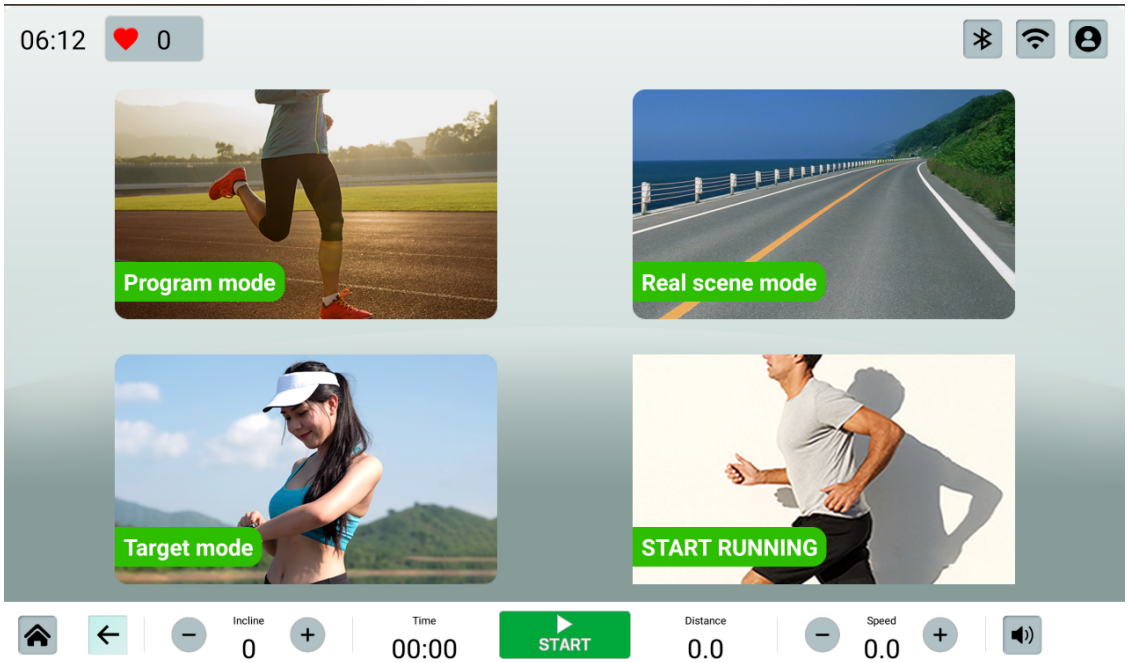

•Time: Displays the time

• Distance: Displays the distance

• Speed: Displays the speed.

• Incline: Displays the Incline

displays：Main interface；

displays：Brightness adjustment；

displays：Volume adjustment；

displays：The set key；

displays：Bluetooth connection；

displays：WIFI connection；

displays：user account login；

Quick mode startup display instructions

Click the "START" button on the main interface to set it to treadmill mode by default, you can freely adjust the speed and incline value, and you can select the appropriate speed and incline value through shortcut.

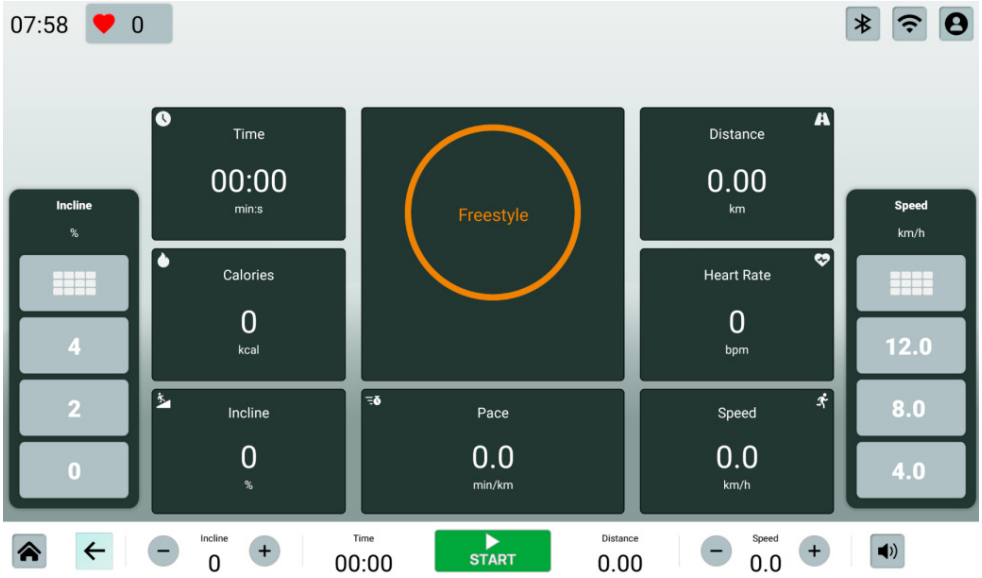

Click "STOP" to end the workout and enter the workout end screen, which will display the workout duration, mileage and calories burned.