2.4G Bluetooth Module Data Sheet

(WS_D96_V1.1)

深圳市微智电子有限公司
官网：www.we-smart.cn
邮箱：**business@we-smart.cn**
地址：深圳市宝安区西乡街道航城大道塘东光电大厦 **1-1506**

PROFILE

Imprint
1 Product Introduction 3
1.1 Brief Introduction 3
1.2 Features 3
1.3 Parameter 4
1.4 Application 5
2 Hardware Introduction 6
2.1 Module appearance and connector 6
2.2 Module connector defination 7
2.3 Module photo 7
2.4 PCB Packaging size 8
2.5 Design Specifaction 8
2.5.1 Antenna design specification 8
2.5.2 PCB design specification 9
2.5.3 Reset circuit design 9
2.6 Requirement of FCC KDB 996369 D03 for module certification 10
3 Antenna Information 13
4 Practical design reference 15
4.1 PWM Dimming scheme design specification 15
4.2 LED driverd reference design 16
5 Contact 17

Version Specification

Version No.	Revision Content	Revisor	Date
V1.0	Based on WS_D95 to change to 2 layer board, delete some unused pin output	We-smart	2023-7-14
V1.1	Additional shield	We-smart	2023-10-20

1 Product Introduction

1.1 Brief Introduction

WS_D96 intelligent lighting module is a Bluetooth module based on TLSR8250 chip, compatible with Bluetooth 5.0 low power (BLE) and Bluetooth mesh networking functions. Devices communicate through a peer-to-peer star network, using Bluetooth broadcast for communication, the module integrated power amplifier, can ensure multi-device, long-distance response in time, it is mainly used in intelligent light control. It can meet the requirements of low power consumption, low delay and short distance wireless data communication.

1.2 Product Feature

- Integrated power amplifier for longer communication distance
- stamp hole patch package, easy to attach
- Rich I/O resources can be expanded to other applications
- High performance onboard antenna, no additional design required

1.3 Parameter

Sheet 1：Module Technical Specifications

Category	Items	Parameter
Wireless Data	Standard	Bluetooth 5.0
	Data Rate	1Mbps
	Frequency Domain	2402MHz ~ 2483MHz
	Maximum transmitting power	＋7.31dBm
	Maximum receiving sensitivity	-96dBm
Hardware Data	data interface	5-way PWM
	storage	512KB internal storage
	service voltage	DC 2.7V ~ 3.6V Recommend 3.3V，±5%
	supply current	≥20mA
	power dissipation	Deep sleeping mode：0.4uA
		Sleep mode：1.4uA
		Mesh mode：13mA
	transmission distance	Directly connected to the open sight range： ≥80 meters
		Cascaded open sight distance：≥200 meters
	Working temperature	－40℃～ ＋75℃
	Module size	18.9mm x 11.6mm x 2.1mm

1.4 Application

- Intelligent light control system
- Home/Building Automation
- Home appliances wireless network control
- Industrial control
- Low power wireless sensor networks

2 Product Hardware Introduction

2.1 Module appearance and interface

Module appearance is as follows, 24 external pins, detailed pin function refer to the following table;

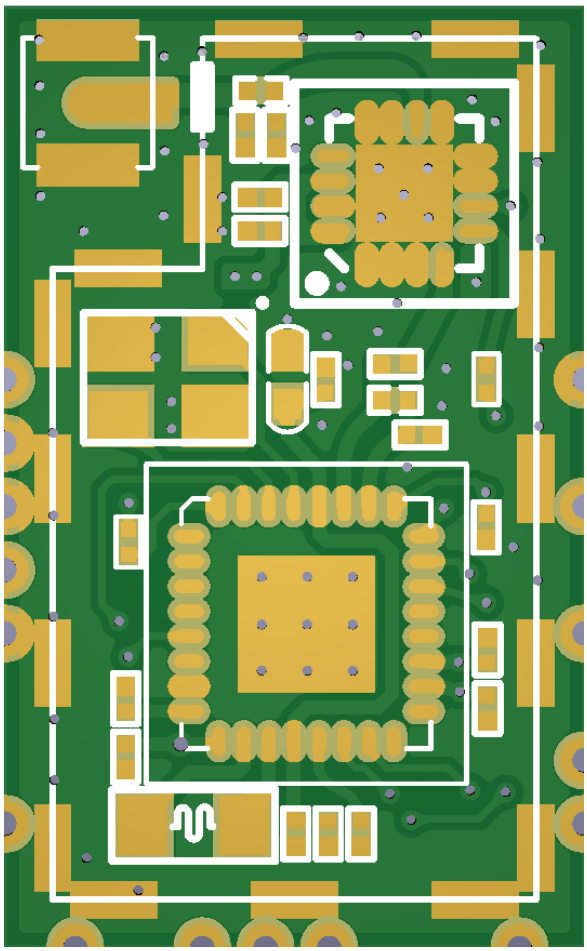

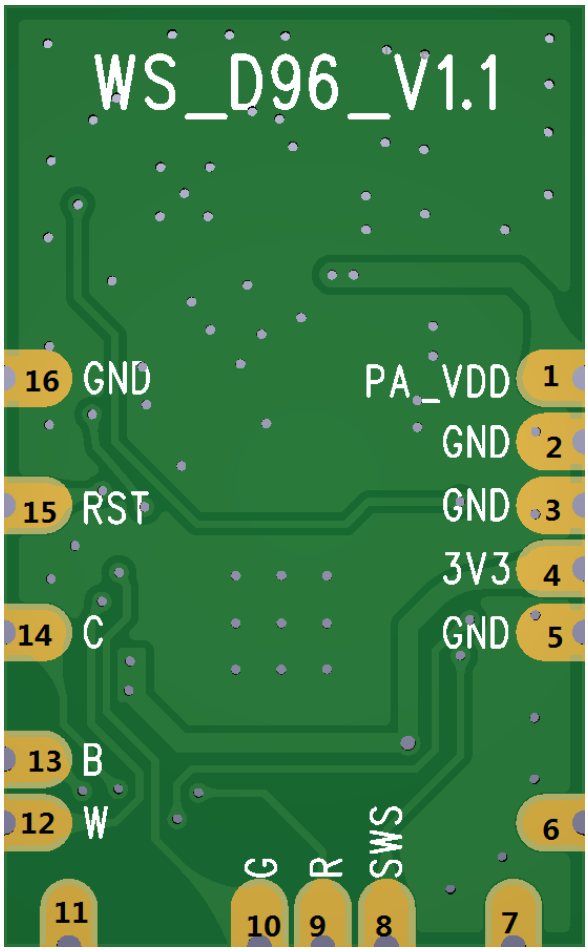

2.2 Module interface definition

Foot Position	Pin Name	Description
1	PA_VDD	It is recommended that you supply power to the module power amplifier separately from the module power supply
2	GND	Modular ground input
3	GND	Modular ground input
4	3V3	Module power input
5	GND	Modular ground input
6	NC	Nil
7	NC	Nil
8	SWS	System debugging interface
9	P4(R)	Red PWM output, high efficiency
10	P5(G)	Green PWM output, high efficiency
11	NC	Nil
12	P0(W)	Warm White PWM output, high efficiency
13	P1(B)	Blue PWM output, high efficiency
14	P2(C)	White PWM output, high efficiency
15	RST	Reset pin, low effectiveness
16	GND	Modular ground input

2.3 Module diagram

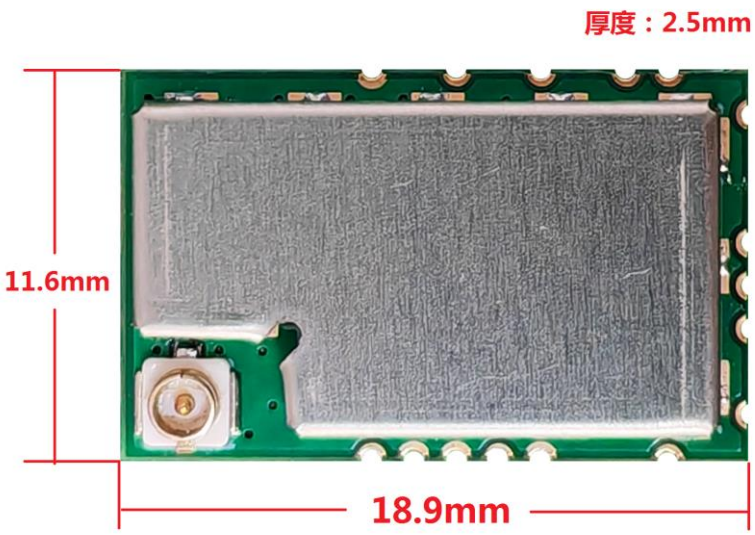

2.4 PCB packaging outline

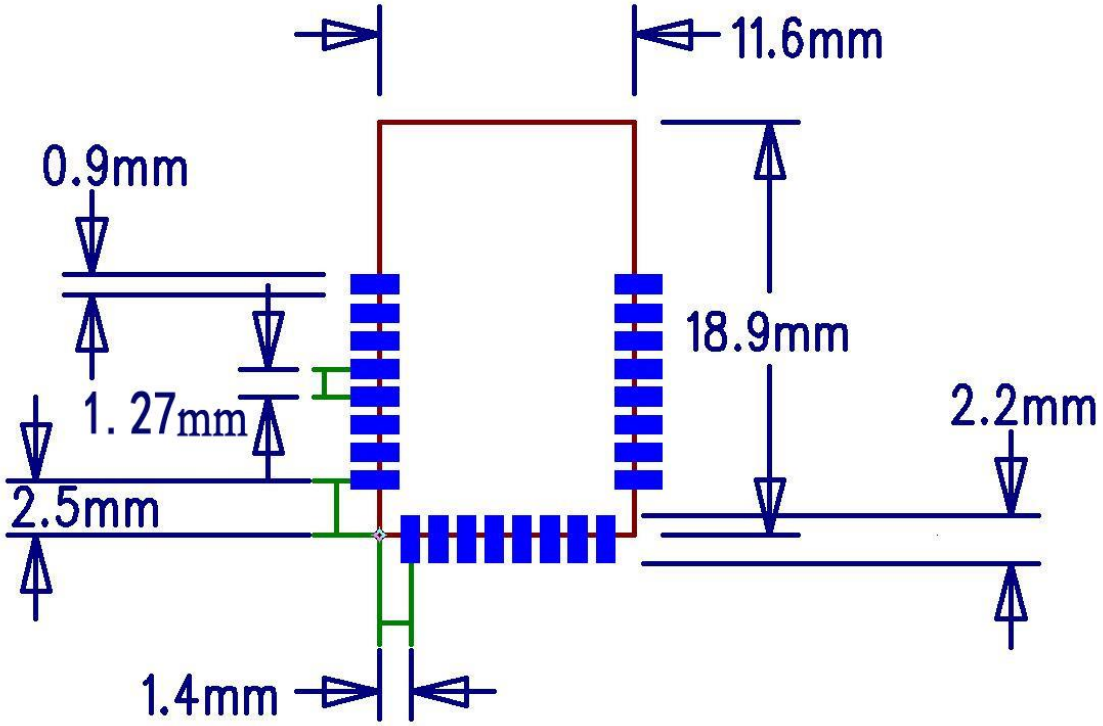

Remark：
For detailed package information, please see file D02-core-smd.zip (D72 is the same package as D02)
Download link: http://pan.baidu.com/s/1c1UEbz6 password: 9 m5v
It contains PADS format package, as well as some compatible format package.

2.5 Design Specification

2.5.1 Antenna Design Specification

The upper left part of the module is an antenna holder, which must be fastened when installing the antenna.

The following antenna design rules should be observed when designing:

①The antenna must be at least 10 mm away from metal or high components;

② The antenna cannot be surrounded by any enclosure. All shell materials, including plastic, should be at least 10 mm away from the antenna area.

2.5.2 PCB Design Specification

It is recommended that the LDO supply 3.3V DC and the PA supply at least 100mA driving current. It is recommended that a 10uF capacitor be placed at the power inlet of the module.

In the planning of the PCB layout, BLE module placement should be kept away from magnetic field sources such as transformers and coils.

2.5.3 Reset Circuit Design

According to the chip reset requirements, we-smart Bluetooth module provides two reset circuit reference designs

The first case: when module power supply is relatively stable, and power on/off is also very timely. In this case, there is no need for additional reset circuit, and the module RST pin can be suspended.

The second case: When the module power supply powers off slowly, the module may enter the suspended state when the wall switch is turned on and off quickly. At this time, a reset IC can be added to solve this problem. Whether the reset circuit needs to be added needs to be determined according to the actual power commissioning situation. Reference reset IC model is MAX809TD SOT-23 package, the threshold voltage is 3.08V, design principle: When the power supply voltage of the module is lower than 3.08V, the reset IC will output a low level reset module, when the power supply voltage is stable at 3.3V, the reset IC output high level, the module works normally. The schematic diagram is as follows:

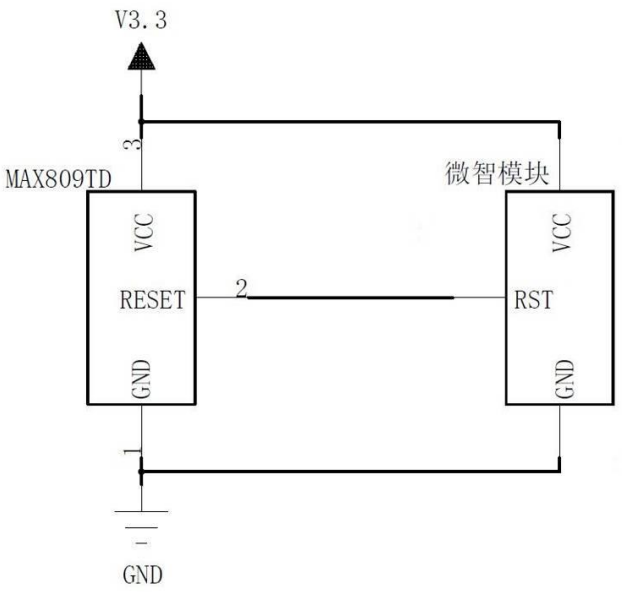

2.6 Requirement of FCC KDB 996369 D03 for module certification:

2.6.1 List of applicable FCC rules:

The module complies with FCC Part 15.247

2.6.2 Summarize the specific operational use conditions:

The module has been certified for Portable applications. This transmitter must not be co-located or operating in conjunction with any other antenna or transmitter.

2.6.3 Limited module procedures:

Not applicable.

2.6.4 Trace antenna designs:

Not applicable.

2.6.5 RF exposure considerations:

This equipment complies with FCC's RF radiation exposure limits set forth for an uncontrolled environment. The antenna(s) used for this transmitter must not be collocated or operating in conjunction with any other antenna or transmitter.

2.6.6 Antennas:

Type	Gain	Impedance	Application
Ipex Antenna	2.81 dBi	50Ω	Fixed

2.6.7 Label and compliance information:

This device complies with part 15 of the FCC rules. Operation is subject to the

following two conditions:

(1) this device may not cause harmful interference, and (2) this device must accept any interference received, including interference that may cause undesired operation.

NOTE: The manufacturer is not responsible for any radio or TV interference caused by unauthorized modifications or changes to this equipment. Such modifications or changes could void the user's authority to operate the equipment.

Warning: Changes or modifications to this unit not expressly approved by the party responsible for compliance could void the user's authority to operate the equipment.

NOTE: This equipment has been tested and found to comply with the limits for a Class B digital device, pursuant to part 15 of the FCC Rules. These limits are designed to provide reasonable protection against harmful interference in a residential installation. This equipment generates uses and can radiate radio frequency energy and, if not installed and used in accordance with the instructions, may cause harmful interference to radio communications. However, there is no guarantee that interference will not occur in a particular installation. If this equipment does cause harmful interference to radio or television reception, which can be determined by turning the equipment off and on, the user is encouraged to try to correct the interference by one or more of the following measures:

- Reorient or relocate the receiving antenna.

- Increase the separation between the equipment and receiver.

-Connect the equipment into an outlet on a circuit different from that to which the receiver is

connected.

-Consult the dealer or an experienced radio/TV technician for help.

The system integrator must place an exterior label on the outside of the final product housing the PA01 Module. Below are the contents that must be included on this label.

OEM Labeling Requirements:

NOTICE: The OEM must make sure that FCC labeling requirements are met. This includes a clearly visible exterior label on the outside of the final product housing that displays the contents shown in below:

Model : PA01 Contains FCC ID: 2BDUIPA01

2.6.8 Information on test modes and additional testing requirements:

When testing host product, the host manufacture should follow FCC KDB Publication 996369 D04 Module Integration Guide for testing the host products. The host manufacturer may operate their product during the measurements. In setting up the configurations, if the pairing and call box options for testing does not work, then the host product manufacturer should coordinate with the module manufacturer for access to test mode software.

2.6.9 Additional testing, Part 15 Subpart B disclaimer:

The modular transmitter is only FCC authorized for the specific rule parts (FCC Part 15.247) list on the grant, and that the host product manufacturer is responsible for compliance to any other FCC rules that apply to the host not covered by the modular transmitter grant of certification. The final host product still requires Part 15 Subpart

B compliance testing with the modular transmitter installed when contains digital circuity.

2.6.10 Note EMI Considerations

The host responsible party integrator must perform EMC tests on the module during synchronous transfer operations when integrating on the host. If there are no emissions of increased magnitude and/or different frequencies compared to the data reported in the module authorization, there is no need to submit the results of these simultaneous transmission test data. KDB publication 996369 D02 and D04 for guidance on module integration and best practices. Co-launching with other modules can refer to KDB publication 996369 D02 and D04, while allowing the host manufacturer to confirm compliance.

2.6.11 How to make changes

This module is stand-alone modular. If the end product will involve the Multiple simultaneously transmitting condition or different operational conditions for a stand-alone modular transmitter in a host, host manufacturer have to consult with module manufacturer for the installation method in end system.

3. Antenna Information

3.1. Appearance and Dimensions SPECIFICATION

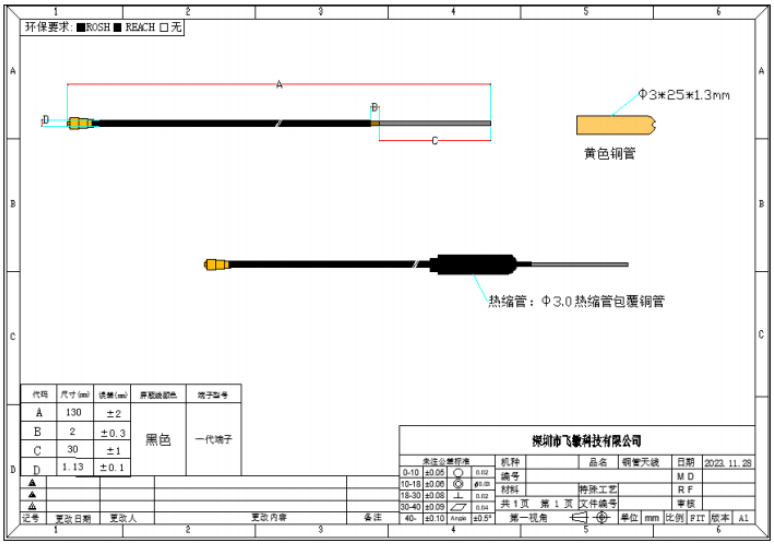

3.2 电气性能 Electrical Characteristics

3.2.1.测试环境条件 Test Environment Conditions

物理性质 physical features	
温度 Temperature	Ordinary Temperature (5 to 35℃)
湿度 Humidity	Ordinary Humidity (25 to 85% RH)

3.2.2.测示方法 Measurement method

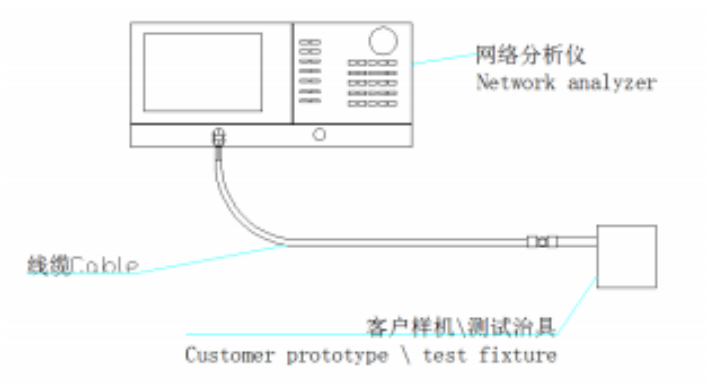

3.2.2.1. Antenna VSWR ANTENNA SPECIFICATION

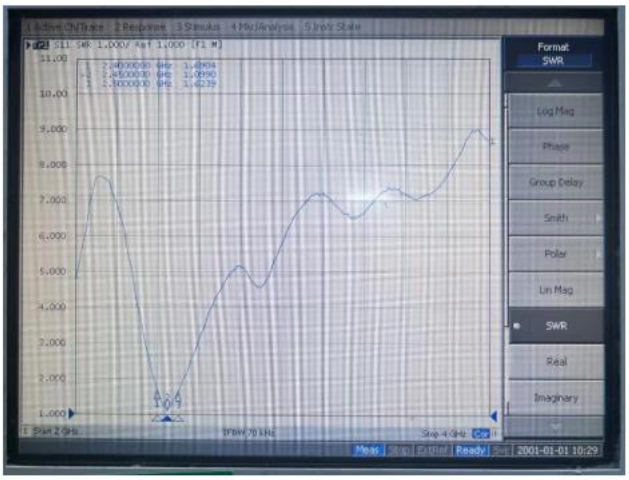

3.2.2.2. Antenna Return loss

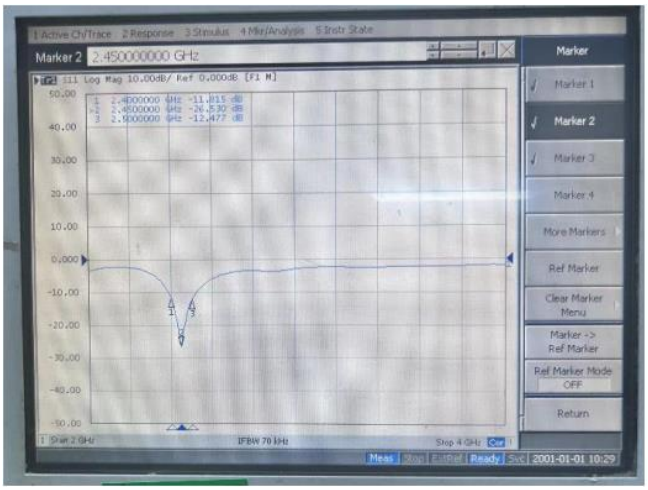

3.2.3. Antenna passive test data

3.2.3.1. Test system

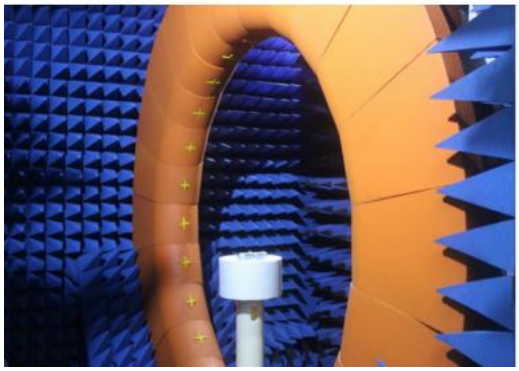

3.2.3.2 Antenna efficiency and gain

Frequency (MHz)	Gain (dBi)	Efficiency (%)
2400MHz	2.73	48.23
2410MHz	2.81	49.49
2420MHz	2.69	50.75
2430MHz	2.56	48.22
2440MHz	2.28	50.66
2450MHz	2.71	51.3
2460MHz	2.59	51.94
2470MHz	2.56	49.36
2480MHz	2.28	48.35
2490MHz	2.76	48.61
2500MHz	2.56	49.19

3.2.3.2. Antenna Radiation Pattern

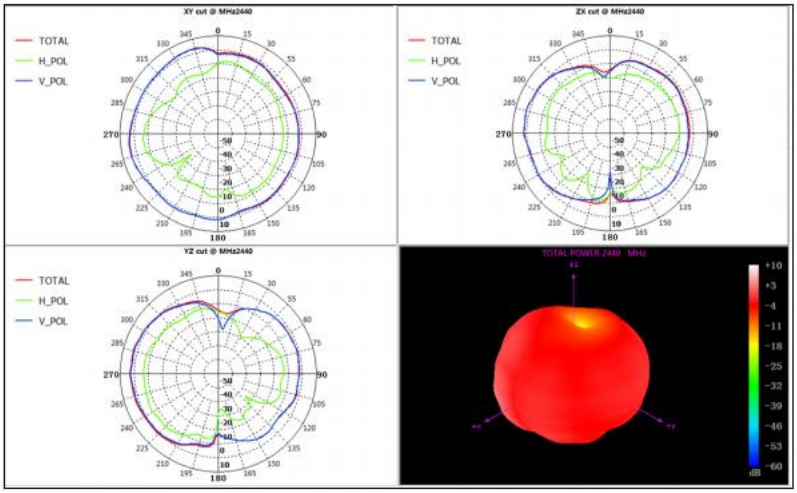

3.3. Remarks:

3.3.1. Pay attention to not being too close to the metal part during installation to avoid affecting the antenna performance.

3.3.2. This antenna is only applicable to this model, the position of the antenna can not be used on other machines.

4 Application Design Reference

4.1 PWM Dimming Scheme Design Description

For lamps that need dimming function, only need to connect the corresponding color PWM pin to the control end of the rear drive circuit; The PWM independent output duty cycle is 100 level adjustable digital signal, and the post-stage circuit can be

voltage driven or current driven.

Connection diagram

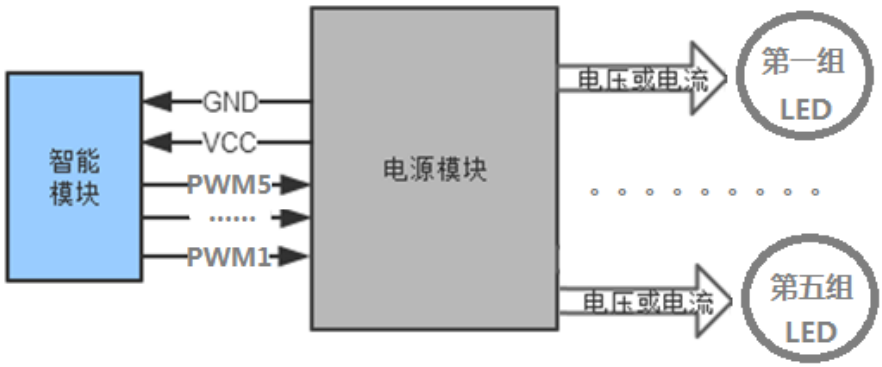

4.2 LED Driver reference design

The We-smart intelligent module only needs to be equipped with 3.3V power supply and a simple drive circuit to achieve intelligent lamp control. Take the MOS tube to drive a pure white light as an example, the design reference is as follows

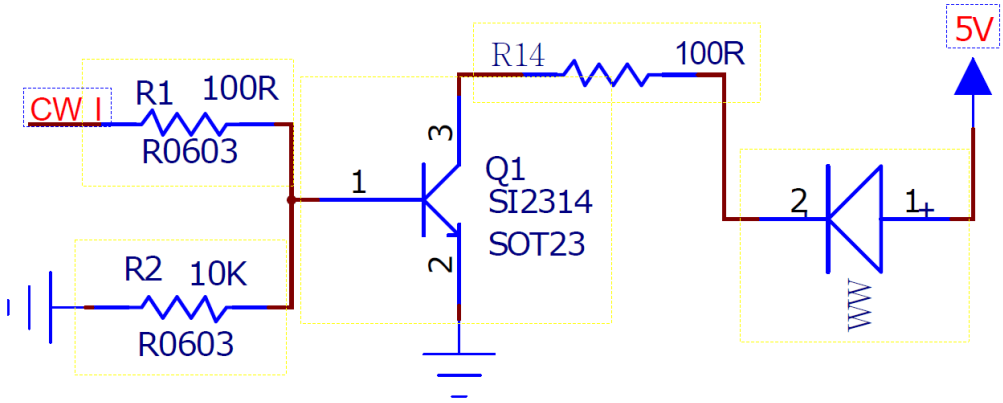

CW_I is the PWM output pin of the module pure white light, Q1 is the MOS tube, WW is the LED lamp bead, and the other 4-way lamp drive circuit is the same as the design method of this way, please see more detailed design original document on web disk data:

Download link: http://pan.baidu.com/s/1eRE3Y4i password: adzz

5. 联系方式

Alliance Outdoor Lighting
ADD：Temecula, CA
TEL: 951-375-7896