FCC Test Report

Report No: FCS202310156W01

Issued for

Applicant:	Enping Tengyue electronic technology Co., LTD
Address:	Fourth floor, No. 76, Yijing residential area, Dasongling, Enping City
Product Name:	Wireless microphone
Brand Name:	KASCHUN
Model Name:	US-9031
Series Model:	BS-883,SH-900,M4,K1,F4,F7,G98X,E-28,ML380,PH400
FCC ID:	2BDW5-US-9031
Issued By: Flux Compliance Service Laboratory Add: Room 105 Floor Bao hao Technology Building 1 NO.15 Gong ye West Road Hi-Tech Industrial, Song shan lake Dongguan Tel: 769-27280901 Fax:769-27280901 http://www.fcs-lab.com	

TEST RESULT CERTIFICATION

Applicant's Name..... :	Enping Tengyue electronic technology Co., LTD
Address..... :	Fourth floor, No. 76, Yijing residential area, Dasongling, Enping City
Manufacture's Name..... :	Enping Tengyue electronic technology Co., LTD
Address..... :	Fourth floor, No. 76, Yijing residential area, Dasongling, Enping City

Product Description

Product Name..... :	Wireless microphone
Brand Name .....:	KASCHUN
Model Name..... :	US-9031
Series Model.....:	BS-883,SH-900,M4,K1,F4,F7,G98X,E-28,ML380,PH400
Test Standards.....:	FCC Rules and Regulations Part 15 Subpart C section 15.236
Test Procedure.....:	ANSI C63.10:2013

This device described above has been tested FCS, the test results show that the equipment under test (EUT) is in compliance with the FCC requirements. And it is applicable only to the tested sample identified in the report.
This report shall not be reproduced except in full, without the written approval of FCS, this document may be altered or revised by FCS, personal only, and shall be noted in the revision of the document..

Date of Test.....:

Date (s) of performance of tests. :	Oct 16, 2023 ~ Nov 30, 2023
Date of Issue.....:	Nov 30, 2023
Test Result..... :	Pass

Tested by : Scott Shen

(Scott Shen)

Reviewed by : Duke Qian

(Duke Qian)

Approved by : Jack Wang

(Jack Wang)

Table of Contents

Page

1. SUMMARY OF TEST RESULTS 6
1.1 TEST FACTORY 7
1.2 MEASUREMENT UNCERTAINTY 7
2. GENERAL INFORMATION 8
2.1 GENERAL DESCRIPTION OF THE EUT 8
2.2 DESCRIPTION OF THE TEST MODES 10
2.3 DESCRIPTION OF NECESSARY ACCESSORIES AND SUPPORT UNITS 11
2.4 EQUIPMENTS LIST 12
3. CONDUCTED EMISSION MEASUREMENT 13
3.2 TEST PROCEDURE 13
3.3 TEST SETUP 14
3.4 TEST RESULTS 15
4 MAXIMUM RADIATED POWER 16
4.1 LIMIT 16
4.2 TEST PROCEDURE 16
3.3 TEST SETUP 16
4.4 TEST RESULTS 16
5. OCCUPIED BANDWIDTH 17
5.1 LIMIT 17
5.2 TEST PROCEDURE 17
5.3 TEST SETUP 17
5.4 TEST RESULTS 18
6.NECESSARY BANDWITH 19
6.1 LIMIT 19
6.2 TEST PROCEDURE 19
6.3 TEST SETUP 19
6.4 TEST RESULT 20
7. TRANSMITTER UNWANTED EMISSIONS 21
7.1 LIMIT 21
7.2 TEST PROCEDURE 21
7.3 TEST SETUP 21

Table of Contents

Page

7.4 TEST RESULTS 22

8. FREQUENCY STABILITY 27

8.1 LIMIT 27

8.2 TEST PROCEDURE 27

8.3 TEST SETUP 27

8.4 TEST RESULTS 28

Revision History

Rev.	Issue Date	Effect Page	Contents
00	Nov 30, 2023	All	Initial Issue

1. SUMMARY OF TEST RESULTS

FCC Part 15 Subpart C section 15.236			
Standard Section	Test Item	Judgment	Remark
FCC Part 15.236(d)	Maximum Radiated Power	PASS	--
FCC Part 15.236(f)(2)	Occupied Bandwidth	PASS	--
FCC Part 15.236(g)	Necessary bandwidth	PASS	--
FCC Part 15.236(f)(3)	Frequency stability	PASS	--
FCC Part 15.236(g)	Emission within the band and outside this band	PASS	--
FCC Part 207(a)	Conducted Emission	N/A	--

NOTE:

(1)" N/A" denotes test is not applicable in this Test Report

(2) All tests are according to ANSI C63.10:2013

1.1 TEST FACTORY

Company Name:	Flux Compliance Service Laboratory
Address:	Room 105 Floor Bao hao Technology Building 1 NO.15 Gong ye West Road Hi-Tech Industrial, Song shan lake Dongguan
Telephone:	+86-769-27280901
Fax:	+86-769-27280901

FCC Test Firm Registration Number: 514908
Designation number: CN0127
A2LA accreditation number: 5545.01
ISED Number: 25801
CAB ID : CN0097

Organization	CAB identifier	Scope / Recognition Date (yyyy-mm-dd)	Expiration (yyyy-mm-dd)
FLUX COMPLIANCE SERVICE LABORATORY Baohao Technology Building 1 No. 15 Gongye West Road Hi-Tech Industrial Park Songsham Lake Dongguan, Guangdong. 523808 PRC. **ISED#: 25801** Contact: Andy Yue andy-vue@fcs-lab.com	CN0097	RSS-102(RFExp) (2020-01-09) RSS-GEN (2020-01-09) RSS-210 (2020-01-09) RSS-247 (2020-01-09)	**RECOGNIZED UNTIL: 2023-12-31** A2LA ISO/IEC 17025: 2017 Expires: 2023-12-31

1.2 MEASUREMENT UNCERTAINTY

The reported uncertainty of measurement **y ±U**, where expended uncertainty **U** is based on a standard uncertainty multiplied by a coverage factor of **k=2**, providing a level of confidence of approximately **95** %.

No.	Item	Uncertainty
1	RF output power, conducted	±0.71dB
2	Unwanted Emissions, conducted	±2.98 dB
3	Conducted Emission (9KHz-150KHz)	±4.13 dB
4	Conducted Emission (150KHz-30MHz)	±4.74 dB
5	All emissions,radiated(<1G) 30MHz-1000MHz	±3.1 dB
6	All emissions,radiated(<1G) 30MHz-1000MHz	±3.2 dB
7	All emissions,radiated (1GHz -18GHz)	±3.66 dB
8	All emissions,radiated (18GHz -40GHz)	±4.31 dB
9	Power Spectral Density	±0.48 dB
10	Occupied bandwidth	±0.3 dB

2. GENERAL INFORMATION

2.1 GENERAL DESCRIPTION OF THE EUT

Product Name	Wireless microphone
Brand Name	KASCHUN
Model Name	US-9031
Series Model	BS-883,SH-900,M4,K1,F4,F7,G98X,E-28,ML380,PH400
	We (Enping Tengyue electronic technology Co., LTD) hereby state that all the models are electrical identical including the same software parameter and hardware design (i.e., circuit design, PCB Layout, RF module/circuit, antenna type(s) and antenna location, components on PCB, etc.,), same mechanical structure and design (including product enclosure, materials, etc.,), the only difference is the model name and appearance color.
Channel List	Please refer to the Note 2.
Operation frequency	CH :530.1MHz-579.85MHz
Modulation Type	FM
Antenna Type	Spring Antenna
Antenna Gain (dBi)	-2.32
Power Supply	DC 3V
Battery	DC 3V
Hardware version number	V1.0
Software version number	V1.0
Connecting I/O Port(s)	Please refer to the User's Manual

Note:

1. For a more detailed features description, please refer to the manufacturer’s specifications or the User's Manual.

2. **Channel List**

Channel			
Channel	Frequency (MHz)		
01	530.10		
02	579.85		

Ant.	Atnenna Brand	Antenna Model Name	Antenna Type	Connector	Gain (dBi)	NOTE
1	N/A	N/A	Sring Antenna	N/A	-2.32	Antenna

2.2 DESCRIPTION OF THE TEST MODES

To investigate the maximum EMI emission characteristics generates from EUT, the test system was pre-scanning tested base on the consideration of following EUT operation mode or test configuration mode which possible have effect on EMI emission level. Each of these EUT operation mode(s) or test configuration mode(s) mentioned above was evaluated respectively.

The test The fixed frequency prototype is used for manual operation was used to control EUT work in continuous TX mode, and select test channel,
Wireless mode as below table, the following operating modes were applied for the related test items. All test modes were tested, only the result of the worst case was recorded in the report.

Tested mode, channel , information		
Mode	Channel	Frequency (MHz)
Channel	CH 01	530.10
	CH 02	579.85

Note：that use new battery during the test

2.3 DESCRIPTION OF NECESSARY ACCESSORIES AND SUPPORT UNITS

The EUT has been tested as an independent unit together with other necessary accessories or support units. The following support units or accessories were used to form a representative test configuration during the tests.

Necessary accessories

Item	Equipment	Mfr/Brand	Model/Type No.	Serial No.	Note
N/A	N/A	N/A	N/A	N/A	N/A

Support units

Item	Equipment	Mfr/Brand	Model/Type No.	Serial No.	Note

Note:

(1) The support equipment was authorized by Declaration of Confirmation.
(2) For detachable type I/O cable should be specified the length in cm in 『Length』 column.
(3) “YES” is means “shielded” “with core”; “NO” is means “unshielded” “without core”.

2.4 EQUIPMENTS LIST

Radiation Test equipment

Kind of Equipment	Manufacturer	Type No.	Company No.	Last calibration	Calibrated until
EMI Test Receiver	R&S	ESRP 3	FCS-E001	2023.08.29	2024.08.28
Signal Analyzer	R&S	FSV40-N	FCS-E012	2023.08.29	2024.08.28
Active loop Antenna	ZHINAN	ZN30900C	FCS-E013	2023.08.29	2024.08.28
Bilog Antenna	SCHWARZBECK	VULB 9168	FCS-E002	2023.08.29	2024.08.28
Horn Antenna	SCHWARZBECK	BBHA 9120D	FCS-E003	2023.08.29	2024.08.28
SHF-EHF Horn Antenna (18G-40GHz)	A-INFO	LB-180400-KF	FCS-E018	2023.08.29	2024.08.28
Pre-Amplifier(0.1M-3G Hz)	EMCI	EM330N	FCS-E004	2023.08.29	2024.08.28
Pre-Amplifier (1G-18GHz)	N/A	TSAMP-0518SE	FCS-E014	2023.08.29	2024.08.28
Pre-Amplifier (18G-40GHz)	TERA-MW	TRLA-0400	FCS-E019	2023.08.29	2024.08.28
Temperature & Humidity	HTC-1	victor	FCS-E005	2023.08.29	2024.08.28
Signal generator	Agilent	E4421B	FCS-E025	2023.08.29	2024.08.28

Conduction Test equipment

Kind of Equipment	Manufacturer	Type No.	Company No.	Last calibration	Calibrated until
EMI Test Receiver	R&S	ESPI	FCS-E020	2023.08.29	2024.08.28
LISN	R&S	ENV216	FCS-E007	2023.08.29	2024.08.28
LISN	ETS	3810/2NM	FCS-E009	2023.08.29	2024.08.28
Temperature & Humidity	HTC-1	victor	FCS-E008	2023.08.29	2024.08.28

RF Connected Test

Kind of Equipment	Manufacturer	Type No.	Company No.	Last calibration	Calibrated until
Spectrum Analyzer	Keysight	N9020A	FCS-E015	2023.08.29	2024.08.28
Spectrum Analyzer	Agilent	E4447A	MY50180039	2023.08.29	2024.08.28
Spectrum Analyzer	R&S	FSV-40	101499	2023.08.29	2024.08.28
Audio Analyzer	R&S	UPL	FCS-E39	2023.08.29	2024.08.28

3. CONDUCTED EMISSION MEASUREMENT

3.1 LIMIT

Operating frequency band. In case the emission fall within the restricted band specified on Part 207(a) limit in the table below has to be followed.

FREQUENCY (MHz)	Conducted Emissionlimit (dBuV)	
	Quasi-peak	Average
0.15 -0.5	66 - 56 *	56 - 46 *
0.50 -5.0	56.00	46.00
5.0 -30.0	60.00	50.00

Note:

(1) The tighter limit applies at the band edges.

(2) The limit of " * " marked band means the limitation decreases linearly with the logarithm of the frequency in the range.

3.2 TEST PROCEDURE

The following table is the setting of the receiver

Receiver Parameters	**Setting**
Attenuation	10 dB
Start Frequency	0.15 MHz
Stop Frequency	30 MHz
IF Bandwidth	9 kHz

a. The EUT was 0.8 meters from the horizontal ground plane and 0.4 meters from the vertical ground plane with EUT being connected to the power mains through a line impedance stabilization network (LISN). All other support equipments powered from additional LISN(s). The LISN provide 50 Ohm/ 50uH of coupling impedance for the measuring instrument.

b. Interconnecting cables that hang closer than 40 cm to the ground plane shall be folded back and forth in the center forming a bundle 30 to 40 cm long.

c. I/O cables that are not connected to a peripheral shall be bundled in the center. The end of the cable may be terminated, if required, using the correct terminating impedance. The overall length shall not exceed 1 m.

d. LISN at least 80 cm from nearest part of EUT chassis.

e. For the actual test configuration, please refer to the related Item –EUT Test Photos.

3.3 TEST SETUP

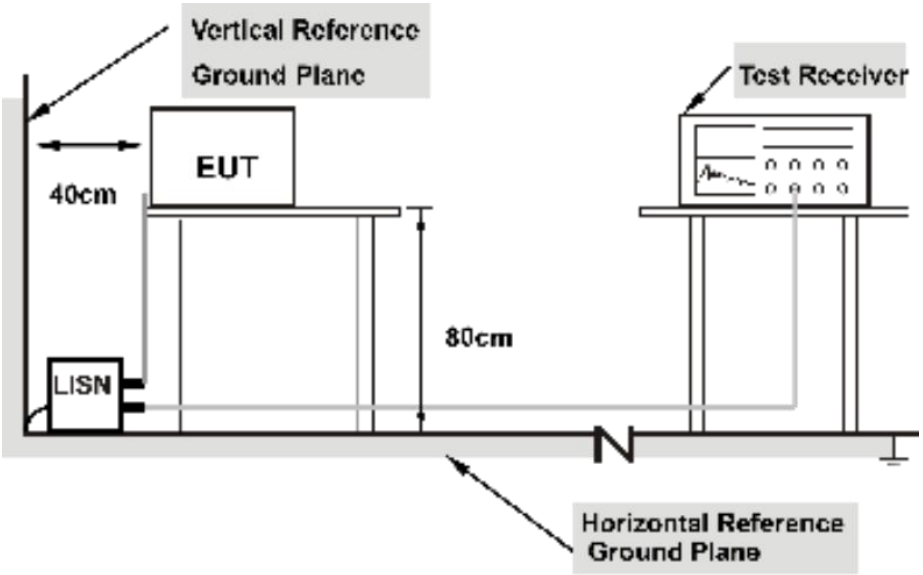

Note: 1.Support units were connected to second LISN.

2.Both of LISNs (AMN) are 80 cm from EUT and at least 80 from other units and other metal planes

3.4 TEST RESULTS

Temperature:	25℃	Relative Humidity:	50%
Test Mode:	N/A	Test Voltage:	N/A
Result:	N/A	Result:	N/A

4 MAXIMUM RADIATED POWER

4.1 LIMIT

Refer to FCC 15.236(d)
In the bands allocated and assigned for broadcast television and in the 600 MHz service band: 50 mW EIRP

4.2 TEST PROCEDURE

A. Connect each EUT's antenna output to power sensor by RF cable and attenuator

3.3 TEST SETUP

4.4 TEST RESULTS

ANT 1

Test mode	Channel	Frequency (MHz)	Peak Output Power (dBm)	Cable loss (dB)	Atnenna Gain (dBi)	EIRP(dBm)	Limit (dBm)	Verdict
Channel	CH 01	530.10	5.58	1.0	-2.32	4.26	16.99	PASS
	CH 02	579.85	5.52	1.0	-2.32	4.20		

Note:Cable loss values have been included in the calculation covered during the test

5. OCCUPIED BANDWIDTH

5.1 LIMIT

One or more adjacent 25KHz segments within the assignable frequencies may be combined to form a channel whose maximum bandwidth shall not exceed 200 kHz. The operating bandwidth shall not exceed 200 kHz

5.2 TEST PROCEDURE

Parameter	Setting
Detector	Peak/AV
Sweep time	Auto
Resolution bandwidth	1 % to 5 % of the occupied bandwidth
Video bandwidth:	3 x resolution bandwidth
Span:	2 x emission bandwidth
Trace mode:	Max. hold
Analyzer function:	99% power occupied bandwidth function
EUT:	Modulated signal with max(FM,2.5kHz tone). frequency deviation

5.3 TEST SETUP

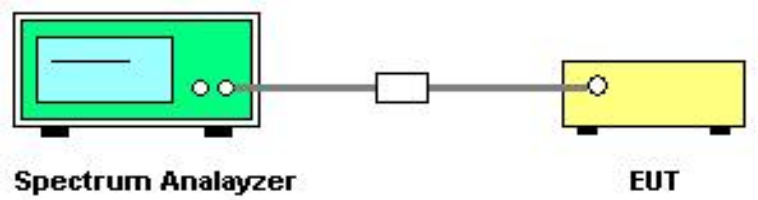

5.4 TEST RESULTS

Test mode	Channel	Frequency (MHz)	20dB Bandwidth (KHz)	Limt(KHz)	Verdict
Channel A	CH 01	530.10	68.23	200KHz	PASS
	CH 04	579.85	68.83		

Channel Low

Channel High

6.NECESSARY BANDWITH

6.1 LIMIT

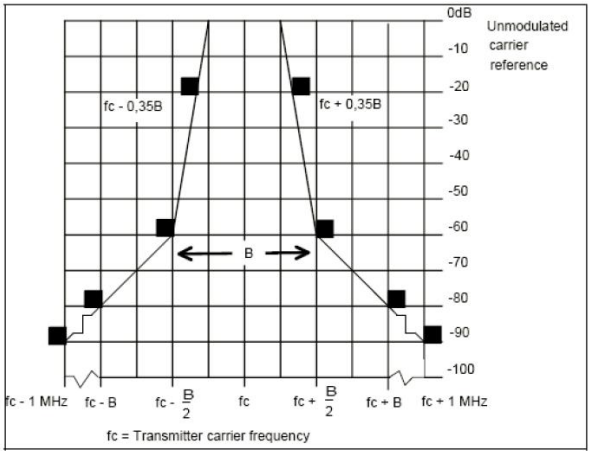

Figure 1: Spectrum mask for analogue systems in all bands

6.2 TEST PROCEDURE

EN300422-1 V1.4.2 Clause 8.3.

6.3 TEST SETUP

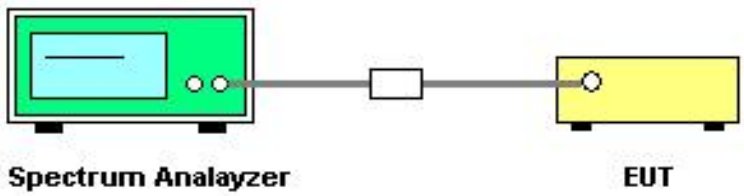

6.4 TEST RESULT

Channel Low	Channel High
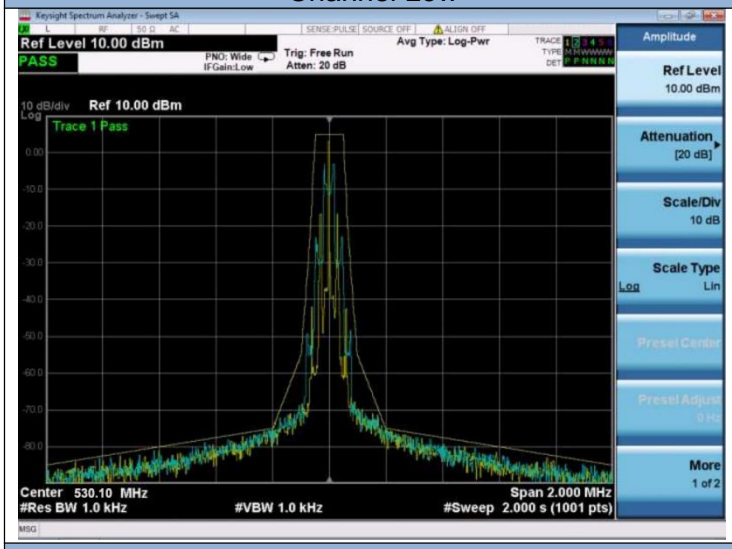	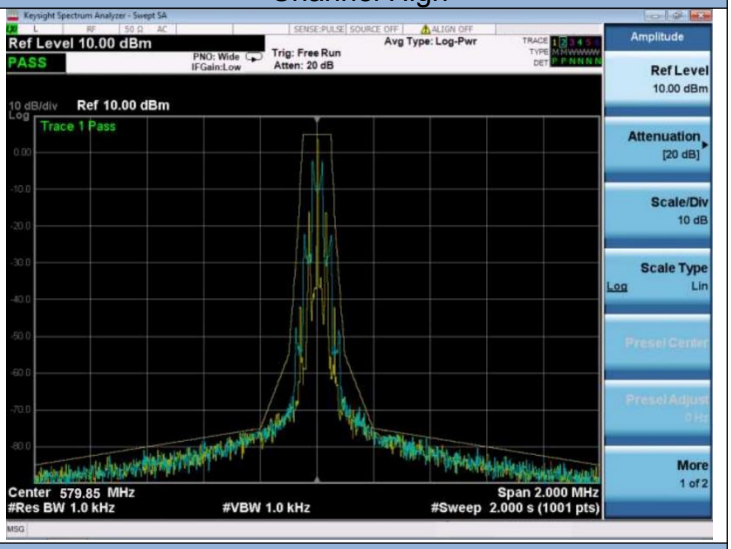

7. TRANSMITTER UNWANTED EMISSIONS

7.1 LIMIT

Spurious emissions are emissions outside the frequency range(s) of the equipment. The power of the spurious emissions shall not exceed the limits of table as below:

State	Frequency		
	47MHz to 74MHz, 87.5MHz to 137MHz 174MHz to 230MHz, 470MHz to 862MHz	Other Frequencies below 1000MHz	Frequencies above 1000MHz
Operation	4nW	250nW	1uW
Standby	2nW	2nW	20nW

7.2 TEST PROCEDURE

1. The transmitter output was connected to the spectrum analyzer through an attenuator. Set spectrum analyzer start 30MHz to 6000MHz with 100 KHz RBW and 300 KHz VBW
2 Please refer to ETSI EN 300 422-1 V1.4.2 (2011-08) clause 6.1 for the test conditions.
3 Please refer to ETSI EN 300 422-1 V1.4.2 (2011-08) clause 8.4.2 for the measurement method.

7.3 TEST SETUP

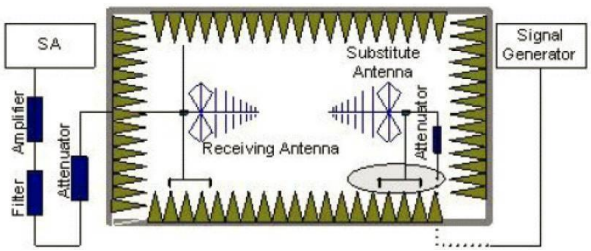

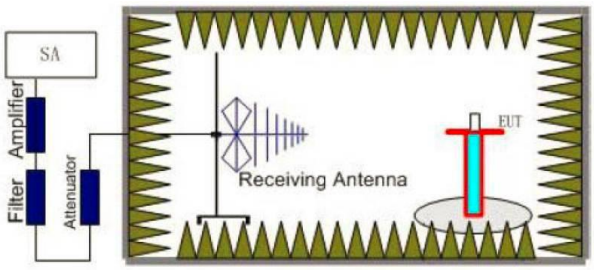

7.4 TEST RESULTS

CHNNEL –LOW CH–30MHZ-1000MHZ

Vertical

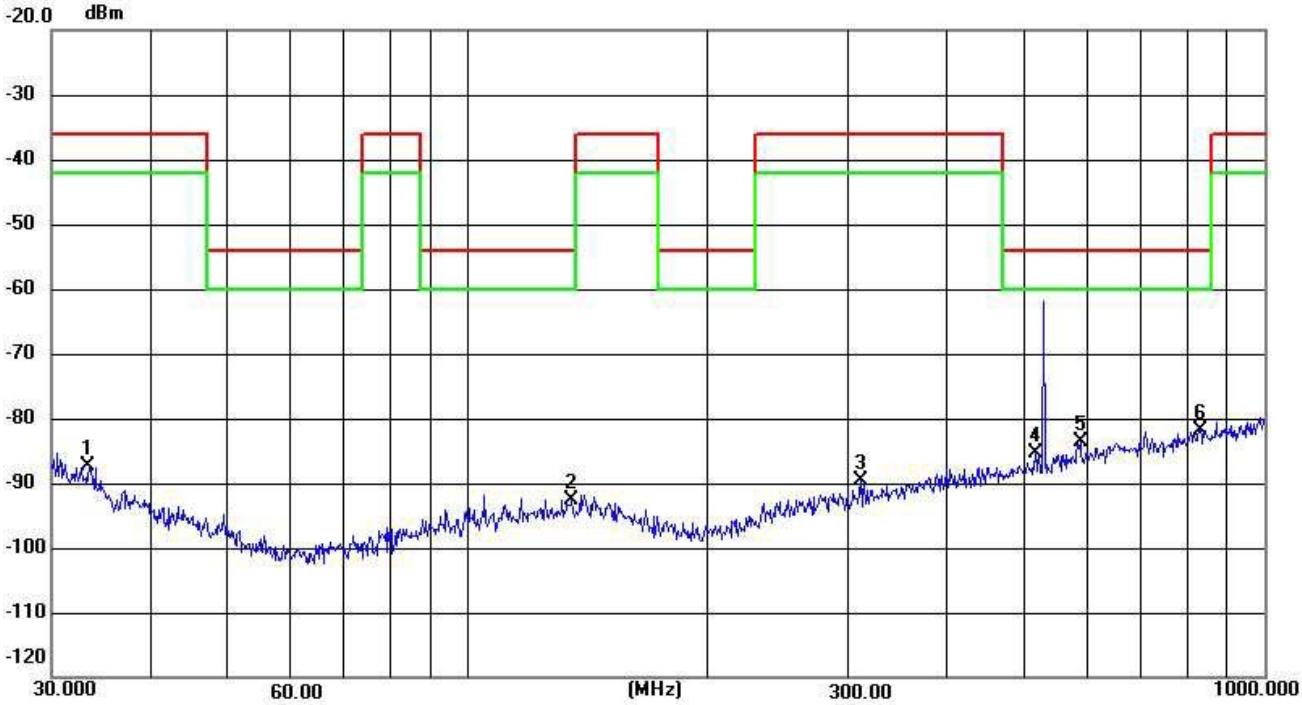

No.	Frequency (MHz)	Reading (dBm)	Correction (dB)	Result (dBm)	Limit (dBm)	Margin (dB)	Remark
1	33.4449	-77.80	-9.65	-87.45	-36.00	-51.45	peak
2	135.0319	-60.27	-32.26	-92.53	-54.00	-38.53	peak
3	311.0867	-57.56	-32.09	-89.65	-36.00	-53.65	peak
4	515.4374	-53.57	-31.88	-85.45	-54.00	-31.45	peak
5	586.8437	-51.73	-31.78	-83.51	-54.00	-29.51	peak
6	830.4002	-50.28	-31.47	-81.75	-54.00	-27.75	peak

Horizontal

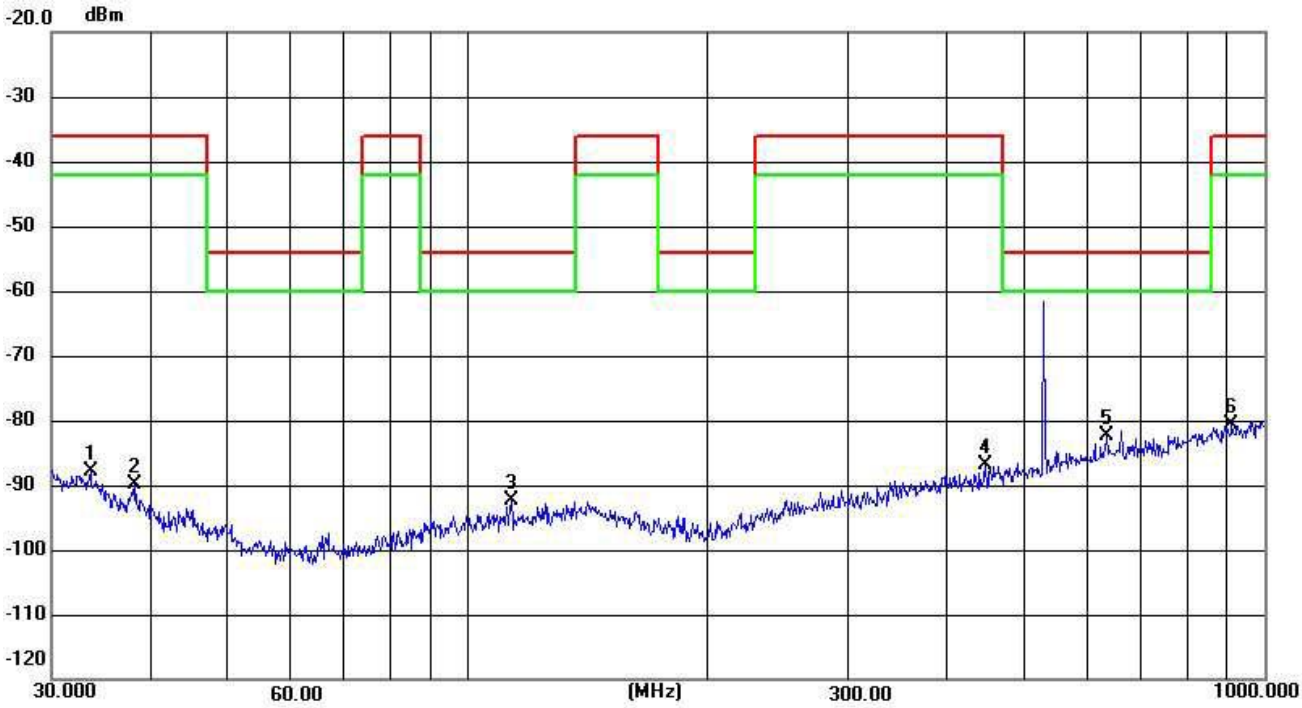

No.	Frequency (MHz)	Reading (dBm)	Correction (dB)	Result (dBm)	Limit (dBm)	Margin (dB)	Remark
1	33.5624	-78.10	-9.74	-87.84	-36.00	-51.84	peak
2	38.2120	-77.16	-12.75	-89.91	-36.00	-53.91	peak
3	113.3163	-60.10	-32.29	-92.39	-54.00	-38.39	peak
4	446.4141	-54.94	-31.95	-86.89	-36.00	-50.89	peak
5	633.9073	-50.59	-31.72	-82.31	-54.00	-28.31	peak
6	909.6667	-49.14	-31.39	-80.53	-36.00	-44.53	peak

Note :

1. Result = Reading + Corrected Factor Note :

CHNNEL –HIGH CH–30MHZ-1000MHZ

Vertical

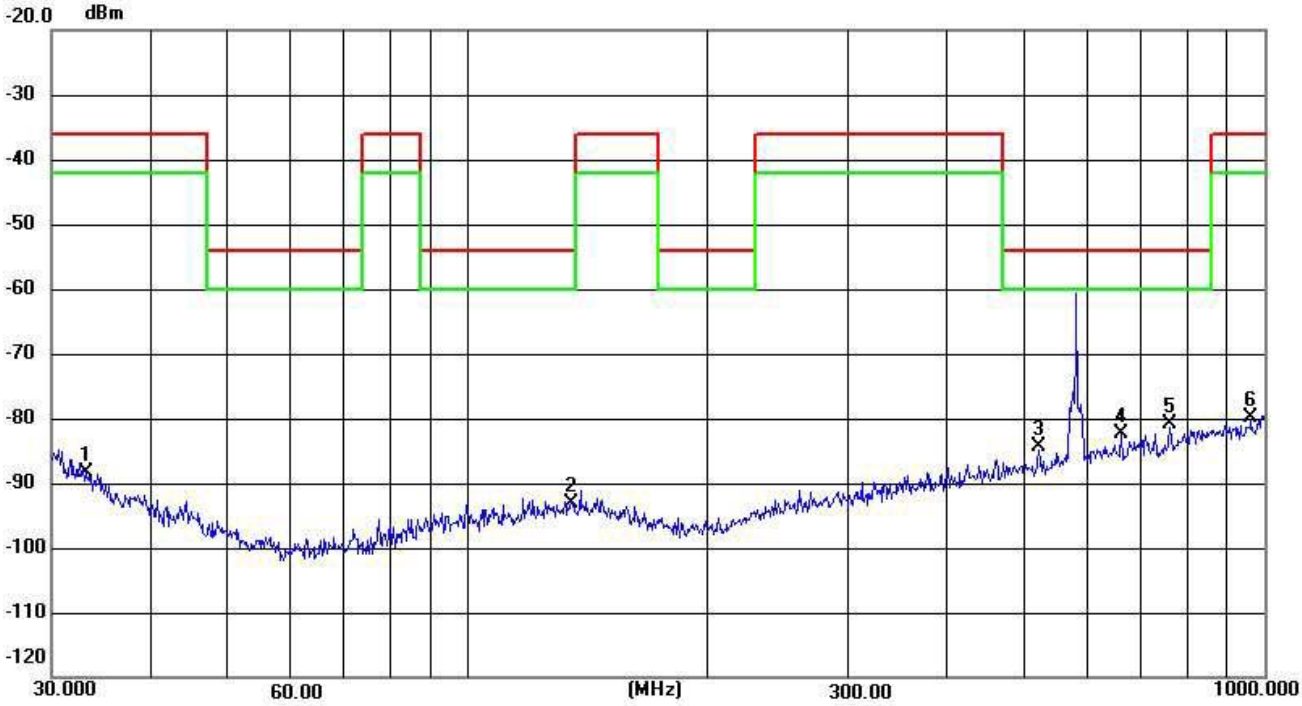

No.	Frequency (MHz)	Reading (dBm)	Correction (dB)	Result (dBm)	Limit (dBm)	Margin (dB)	Remark
1	33.2112	-78.75	-9.50	-88.25	-36.00	-52.25	peak
2	135.0319	-60.95	-32.26	-93.21	-54.00	-39.21	peak
3	520.8882	-52.53	-31.87	-84.40	-54.00	-30.40	peak
4	661.1504	-50.76	-31.69	-82.45	-54.00	-28.45	peak
5	760.7036	-49.26	-31.55	-80.81	-54.00	-26.81	peak
6	962.1623	-48.61	-31.34	-79.95	-36.00	-43.95	peak

Horizontal

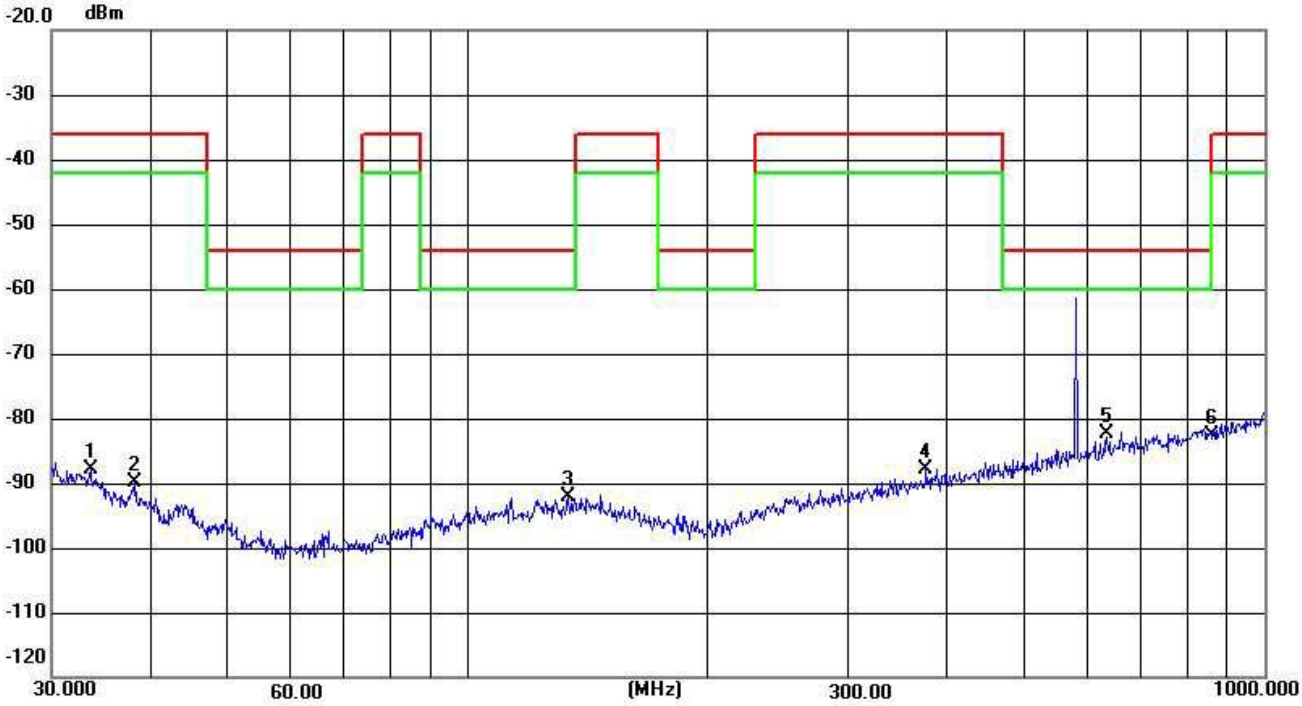

No.	Frequency (MHz)	Reading (dBm)	Correction (dB)	Result (dBm)	Limit (dBm)	Margin (dB)	Remark
1	33.5624	-78.10	-9.74	-87.84	-36.00	-51.84	peak
2	38.2120	-77.16	-12.75	-89.91	-36.00	-53.91	peak
3	133.6188	-59.93	-32.27	-92.20	-54.00	-38.20	peak
4	375.9385	-55.83	-32.02	-87.85	-36.00	-51.85	peak
5	633.9073	-50.59	-31.72	-82.31	-54.00	-28.31	peak
6	860.0352	-51.09	-31.44	-82.53	-54.00	-28.53	peak

Note :

1. Result = Reading + Corrected Factor Note :

CHANNEL 1GHZ-6GHZ

Frequency (MHz)	Reading (dBm)	Correct dB	Result (dBm)	Limit (dBm)	Margin (dB)	Polar H/V	Detector
Channel 530.10 MHz							
1060.20	-50.50	7.92	-42.58	-30	-12.58	H	Peak
1060.20	-51.28	13.97	-37.31	-30	-7.31	H	Peak
2120.40	-49.39	7.92	-41.47	-30	-11.47	V	Peak
2120.40	-48.90	13.64	-35.26	-30	-5.26	V	Peak
Channel 579.85MHz							
1159.70	-53.70	8.19	-45.51	-30	-15.51	H	Peak
1159.70	-53.58	13.52	-40.06	-30	-10.06	H	Peak
2319.40	-51.43	8.19	-43.24	-30	-13.24	V	Peak
2319.40	-49.18	13.52	-35.66	-30	-5.66	V	Peak

8. FREQUENCY STABILITY

8.1 LIMIT

The frequency tolerance of the carrier signal shall be maintained within ±0.005% of the operating frequency over a temperature variation of −20 degrees to +50 degrees C at normal supply voltage, and for a variation in the primary supply voltage from 85% to 115% of the rated supply voltage at a temperature of 20 degrees C

8.2 TEST PROCEDURE

a. The EUT was connected to an external DC power supply and the RF output was connected to a frequency counter via feed through attenuators. The EUT was placed inside the temperature chamber. The DC leads and the RF output cable, exited the chamber through an opening made for that purpose.
After the temperature stabilized the frequency output was recorded form the counter. An external variable DC power supply was connected to the battery terminals of the equipment under test.

b. For hand carried, battery powered equipment primary supply voltage was reduced to the battery operating end point as specified by the manufacturer. The output frequency was recorded for each battery voltage.

8.3 TEST SETUP

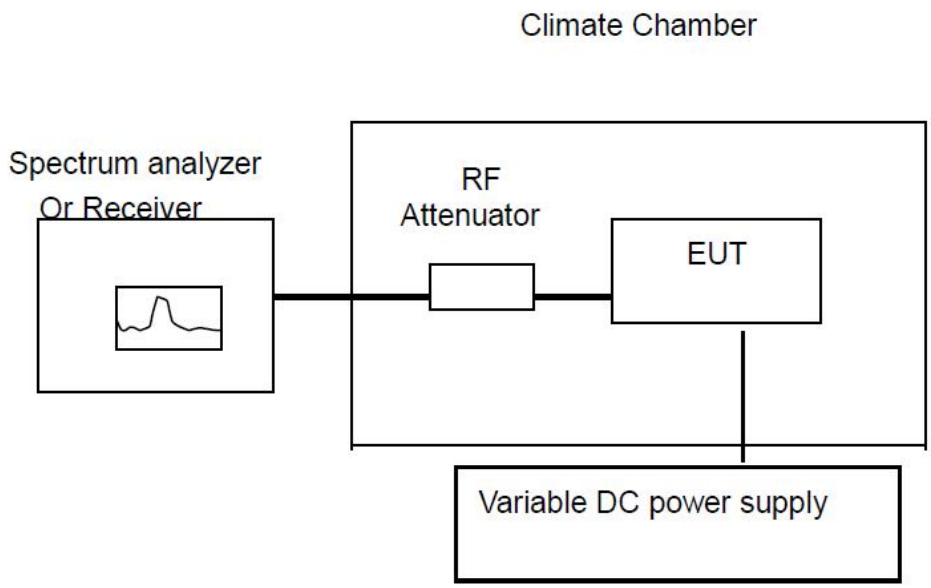

8.4 TEST RESULTS

(1) Frequency stability versus input voltage (Supply Nominal voltage is DC 3V)

(2) Frequency stability versus input voltage (Supply battery operating end point which shall be specified by the manufacturer DC 3.145V)

Refernce Frequency: 530.10MHz			
Power supply	Environment Temperature(℃)	Frequency Error (Hz)	Frequency Error (ppm)
DC 2.7V	20	1021	1.93
DC 3V	20	1011	1.91
DC 3.3V	20	1013	1.91

Refernce Frequency: 530.10MHz				
Frequency Deviation measured with time Elapse(30 minutes)				
Environment Temperature(℃)	Frequency Error (Hz)	Frequency Error (ppm)	Limit (ppm)	Results
50	1023	1.93	50	Pass
40	1022	1.93		
30	1019	1.92		
20	1023	1.93		
10	1019	1.92		
0	1023	1.93		
-10	1023	1.93		
-20	1019	1.92		

Refernce Frequency: 579.85MHz			
Power supply	Environment Temperature(℃)	Frequency Error (Hz)	Frequency Error (ppm)
DC 2.7V	20	1009	1.74
DC 3V	20	1006	1.73
DC 3.3V	20	1010	1.74

Refernce Frequency: 579.85MHz				
Frequency Deviation measured with time Elapse(30 minutes)				
Environment Temperature(℃)	Frequency Error (Hz)	Frequency Error (ppm)	Limit (ppm)	Results
50	1011	1.74	50	Pass
40	1006	1.73		
30	1006	1.73		
20	1008	1.74		
10	1007	1.74		
0	1008	1.74		
-10	1008	1.74		
-20	1006	1.73		

※※※※※END OF THE REPORT※※※※※