Test Laboratory: UnionTrust Date: 2024/3/6

System Check_H750_24dBm

DUT: Dipole 750 MHz

Communication System: UID 0, CW; Frequency: 750 MHz;Duty Cycle: 1:1
Medium: H750 Medium parameters used: f = 750 MHz; σ = 0.888 S/m; ε_r = 43.0; ρ = 1000 kg/m^3

DASY4 Configuration:
- Probe: EX3DV4 - SN7624; ConvF(10.58, 10.58, 10.58) @ 750 MHz; Calibrated: 2023/9/6
- Sensor-Surface: 3mm (Mechanical Surface Detection)
- Electronics: DAE4 Sn549; Calibrated: 2024/1/23
- Phantom: SAM 1; Type: QD 000 P40 CB; Serial: TP/1378
- Postprocessing SW: SEMCAD, V1.8 Build 186

System check/Area Scan (51x71x1): Interpolated grid: dx=1.500 mm, dy=1.500 mm
Maximum value of SAR (interpolated) = 2.48 W/kg

System check/Zoom Scan (5x5x7)/Cube 0: Measurement grid: dx=8mm, dy=8mm, dz=5mm
Reference Value = 53.35 V/m; Power Drift = 0.07 dB
Peak SAR (extrapolated) = 3.20 W/kg
SAR(1 g) = 2.17 W/kg; SAR(10 g) = 1.45 W/kg
Smallest distance from peaks to all points 3 dB below: Larger than measurement grid
Ratio of SAR at M2 to SAR at M1 = 67.9%
Maximum value of SAR (measured) = 2.53 W/kg

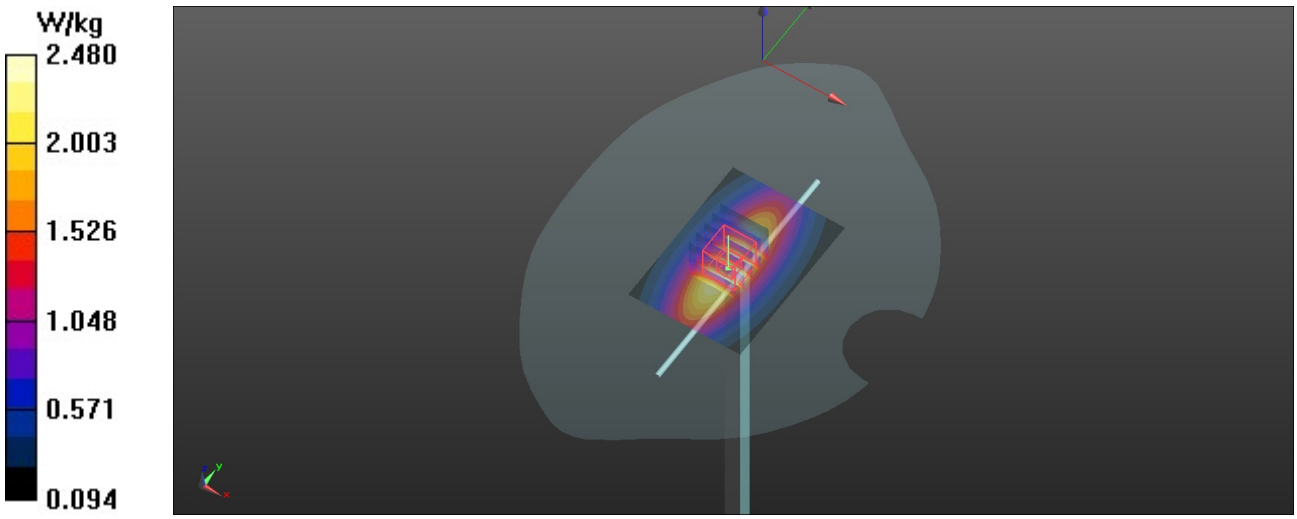

System Check_H835_24dBm

DUT: Dipole 835 MHz

Communication System: UID 0, CW; Frequency: 835 MHz;Duty Cycle: 1:1
Medium: H835 Medium parameters used: f = 835 MHz; σ = 0.931 S/m; ε_r = 42.3; ρ = 1000 kg/m^3

DASY4 Configuration:
- Probe: EX3DV4 - SN7624; ConvF(10.19, 10.19, 10.19) @ 835 MHz; Calibrated: 2023/9/6
- Sensor-Surface: 3mm (Mechanical Surface Detection)
- Electronics: DAE4 Sn549; Calibrated: 2024/1/23
- Phantom: SAM 1; Type: QD 000 P40 CB; Serial: TP/1378
- Postprocessing SW: SEMCAD, V1.8 Build 186

System check/Area Scan (51x81x1): Interpolated grid: dx=1.500 mm, dy=1.500 mm
Maximum value of SAR (interpolated) = 2.68 W/kg

System check/Zoom Scan (5x5x7)/Cube 0: Measurement grid: dx=8mm, dy=8mm, dz=5mm
Reference Value = 54.26 V/m; Power Drift = 0.01 dB
Peak SAR (extrapolated) = 3.44 W/kg
SAR(1 g) = 2.33 W/kg; SAR(10 g) = 1.53 W/kg
Smallest distance from peaks to all points 3 dB below = 21.5 mm
Ratio of SAR at M2 to SAR at M1 = 67.5%
Maximum value of SAR (measured) = 2.72 W/kg

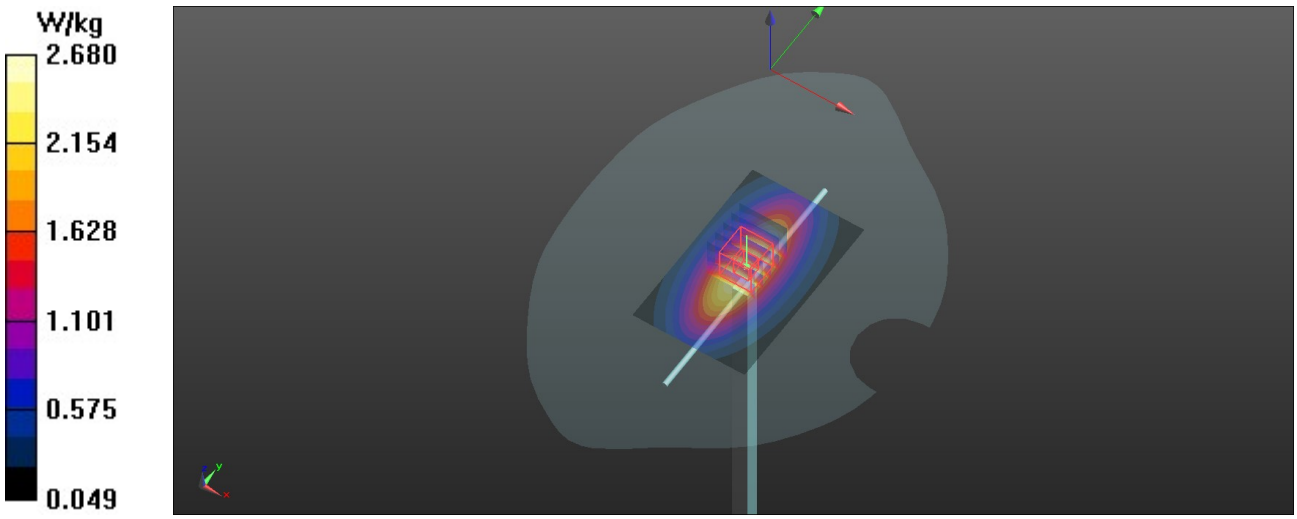

System Check_H1750_24dBm

DUT: Dipole 1750 MHz

Communication System: UID 0, CW; Frequency: 1750 MHz;Duty Cycle: 1:1
Medium: H1750 Medium parameters used: f = 1750 MHz; σ = 1.324 S/m; ε_r = 40.3; ρ = 1000 kg/m^3

DASY4 Configuration:
- Probe: EX3DV4 - SN7624; ConvF(8.66, 8.66, 8.66) @ 1750 MHz; Calibrated: 2023/9/6
- Sensor-Surface: 3mm (Mechanical Surface Detection)
- Electronics: DAE4 Sn549; Calibrated: 2024/1/23
- Phantom: SAM 1; Type: QD 000 P40 CB; Serial: TP/1378
- Postprocessing SW: SEMCAD, V1.8 Build 186

System check/Area Scan (51x81x1): Interpolated grid: dx=1.500 mm, dy=1.500 mm
Maximum value of SAR (interpolated) = 11.5 W/kg

System check/Zoom Scan (5x5x7)/Cube 0: Measurement grid: dx=8mm, dy=8mm, dz=5mm
Reference Value = 72.88 V/m; Power Drift = 0.11 dB
Peak SAR (extrapolated) = 16.4 W/kg
SAR(1 g) = 8.75 W/kg; SAR(10 g) = 4.48 W/kg
Smallest distance from peaks to all points 3 dB below = 11.2 mm
Ratio of SAR at M2 to SAR at M1 = 53.1%
Maximum value of SAR (measured) = 11.2 W/kg

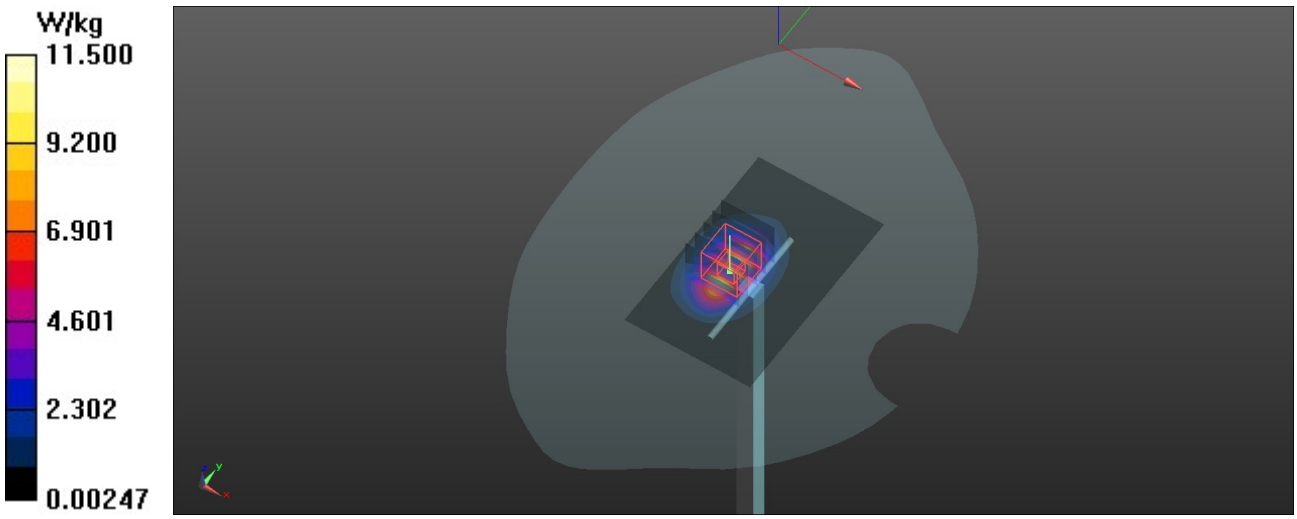

Test Laboratory: UnionTrust Date: 2024/3/8

System Check_H1900_24dBm

DUT: Dipole 1900 MHz

Communication System: UID 0, CW; Frequency: 1900 MHz;Duty Cycle: 1:1
Medium: H1900 Medium parameters used: f = 1900 MHz; σ = 1.356 S/m; ε_r = 41.5; ρ = 1000 kg/m^3

DASY4 Configuration:
- Probe: EX3DV4 - SN7624; ConvF(8.35, 8.35, 8.35) @ 1900 MHz; Calibrated: 2023/9/6
- Sensor-Surface: 3mm (Mechanical Surface Detection)
- Electronics: DAE4 Sn549; Calibrated: 2024/1/23
- Phantom: SAM 1; Type: QD 000 P40 CB; Serial: TP/1378
- Postprocessing SW: SEMCAD, V1.8 Build 186

System check/Area Scan (51x81x1): Interpolated grid: dx=1.500 mm, dy=1.500 mm
Maximum value of SAR (interpolated) = 13.1 W/kg

System check/Zoom Scan (5x5x7)/Cube 0: Measurement grid: dx=8mm, dy=8mm, dz=5mm
Reference Value = 77.43 V/m; Power Drift = 0.10 dB
Peak SAR (extrapolated) = 18.7 W/kg
SAR(1 g) = 9.92 W/kg; SAR(10 g) = 5.08 W/kg
Smallest distance from peaks to all points 3 dB below = 11.2 mm
Ratio of SAR at M2 to SAR at M1 = 53.1%
Maximum value of SAR (measured) = 12.8 W/kg

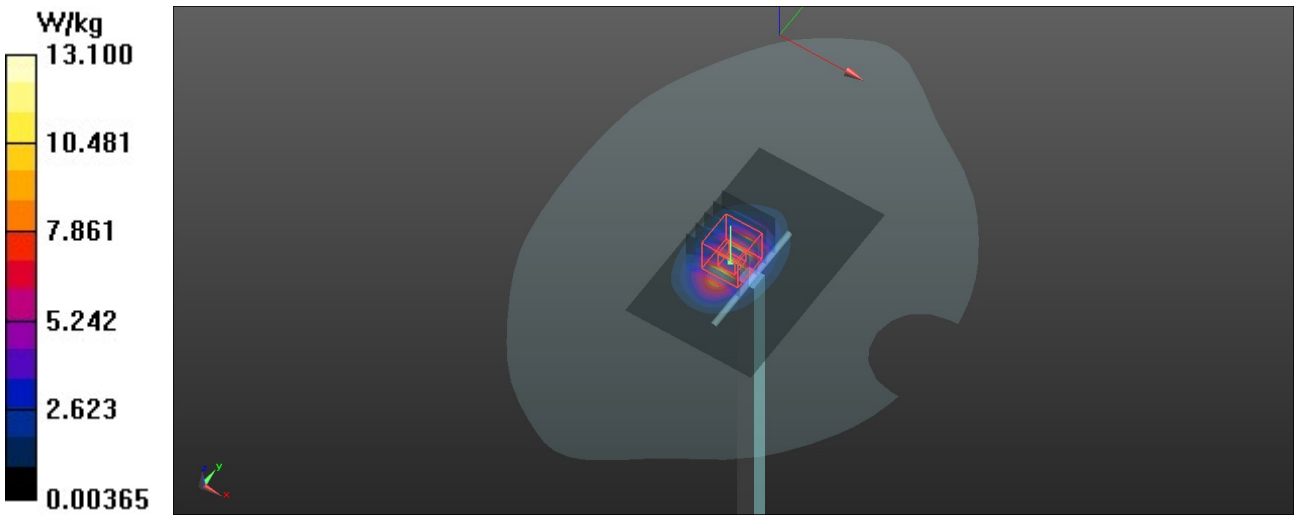

Test Laboratory: UnionTrust Date: 2024/3/15

System Check_H2300_24dBm

DUT: Dipole 2300 MHz

Communication System: UID 0, CW; Frequency: 2300 MHz;Duty Cycle: 1:1
Medium: H2300 Medium parameters used: f = 2300 MHz; σ = 1.653 S/m; ε_r = 40.8; ρ = 1000 kg/m^3

DASY4 Configuration:
- Probe: EX3DV4 - SN7624; ConvF(8.13, 8.13, 8.13) @ 2300 MHz; Calibrated: 2023/9/6
- Sensor-Surface: 3mm (Mechanical Surface Detection)
- Electronics: DAE4 Sn549; Calibrated: 2024/1/23
- Phantom: SAM 1; Type: QD 000 P40 CB; Serial: TP/1378
- Postprocessing SW: SEMCAD, V1.8 Build 186

System check/Area Scan (61x81x1): Interpolated grid: dx=1.200 mm, dy=1.200 mm
Maximum value of SAR (interpolated) = 17.3 W/kg

System check/Zoom Scan (7x7x7)/Cube 0: Measurement grid: dx=5mm, dy=5mm, dz=5mm
Reference Value = 92.17 V/m; Power Drift = 0.17 dB
Peak SAR (extrapolated) = 25.4 W/kg
SAR(1 g) = 12.1 W/kg; SAR(10 g) = 5.61 W/kg
Smallest distance from peaks to all points 3 dB below = 9.9 mm
Ratio of SAR at M2 to SAR at M1 = 48.5%
Maximum value of SAR (measured) = 16.1 W/kg

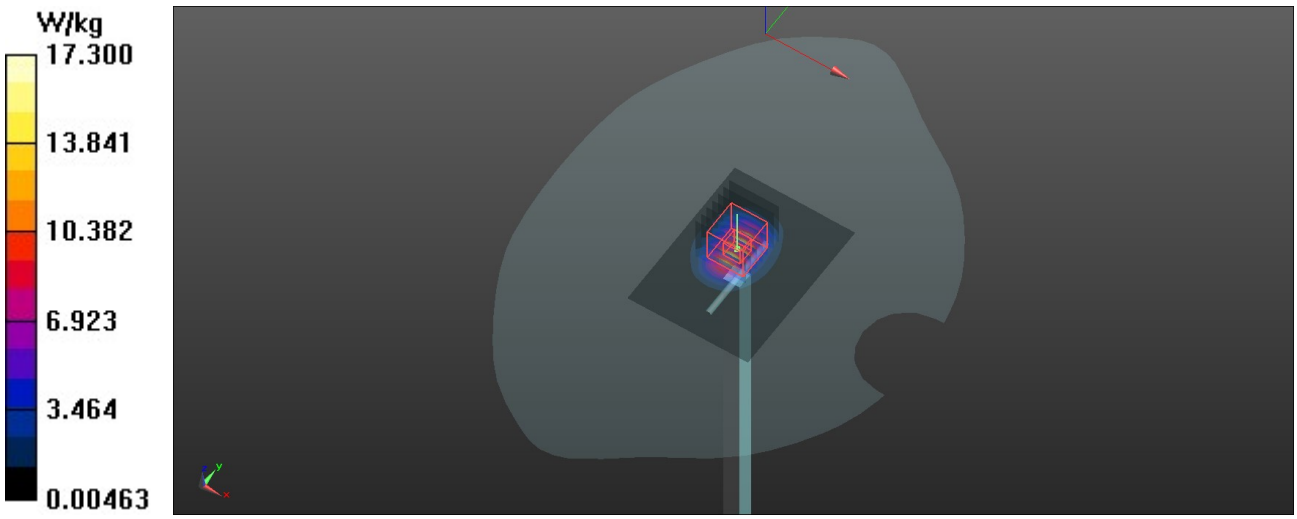

System Check_H2450_24dBm

DUT: Dipole 2450 MHz

Communication System: UID 0, CW; Frequency: 2450 MHz;Duty Cycle: 1:1
Medium: H2450 Medium parameters used: f = 2450 MHz; σ = 1.805 S/m; ε_r = 40.4; ρ = 1000 kg/m^3

DASY4 Configuration:
- Probe: ES3DV3 - SN3090; ConvF(4.68, 4.68, 4.68) @ 2450 MHz; Calibrated: 2023/3/15
- Sensor-Surface: 3mm (Mechanical Surface Detection)
- Electronics: DAE4 Sn662; Calibrated: 2023/3/8
- Phantom: SAM 1; Type: QD 000 P40 CB; Serial: TP/1378
- Postprocessing SW: SEMCAD, V1.8 Build 186

System check/Area Scan (61x81x1): Interpolated grid: dx=1.200 mm, dy=1.200 mm
Maximum value of SAR (interpolated) = 19.7 W/kg

System check/Zoom Scan (7x7x7)/Cube 0: Measurement grid: dx=5mm, dy=5mm, dz=5mm
Reference Value = 96.98 V/m; Power Drift = 0.15 dB
Peak SAR (extrapolated) = 28.3 W/kg
SAR(1 g) = 13.9 W/kg; SAR(10 g) = 6.32 W/kg
Smallest distance from peaks to all points 3 dB below = 9 mm
Ratio of SAR at M2 to SAR at M1 = 50.2%
Maximum value of SAR (measured) = 18.9 W/kg

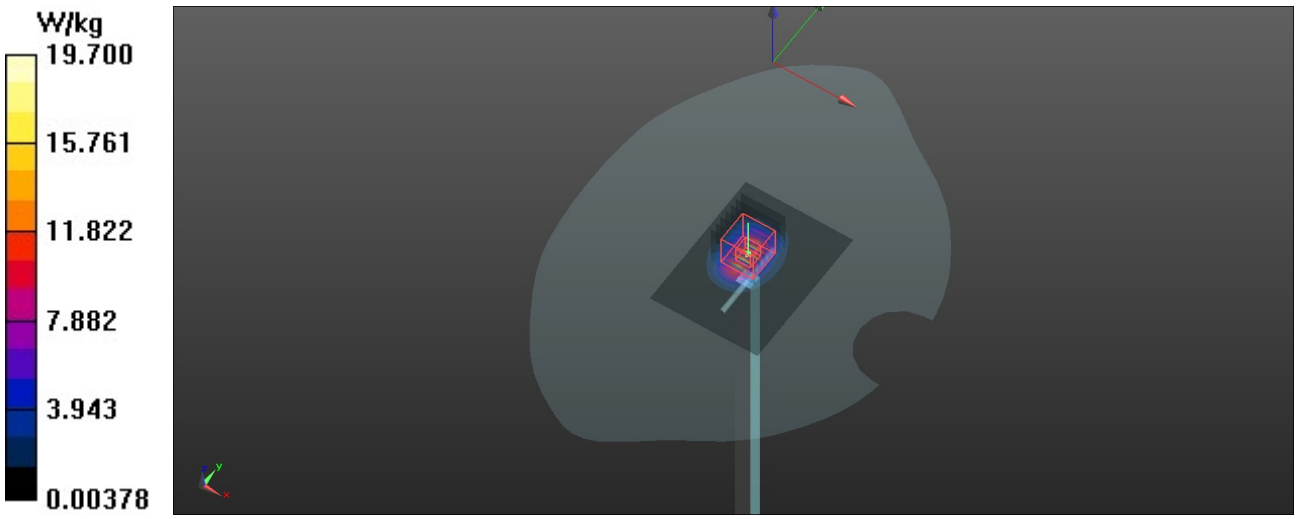

System Check_H2600_24dBm

DUT: Dipole 2600 MHz

Communication System: UID 0, CW; Frequency: 2600 MHz;Duty Cycle: 1:1
Medium: H2600 Medium parameters used: f = 2600 MHz; σ = 1.971 S/m; ε_r = 39.9; ρ = 1000 kg/m^3

DASY4 Configuration:
- Probe: EX3DV4 - SN7624; ConvF(7.66, 7.66, 7.66) @ 2600 MHz; Calibrated: 2023/9/6
- Sensor-Surface: 3mm (Mechanical Surface Detection)
- Electronics: DAE4 Sn549; Calibrated: 2024/1/23
- Phantom: SAM 1; Type: QD 000 P40 CB; Serial: TP/1378
- Postprocessing SW: SEMCAD, V1.8 Build 186

System check/Area Scan (61x81x1): Interpolated grid: dx=1.200 mm, dy=1.200 mm
Maximum value of SAR (interpolated) = 18.8 W/kg

System check/Zoom Scan (7x7x7)/Cube 0: Measurement grid: dx=5mm, dy=5mm, dz=5mm
Reference Value = 87.44 V/m; Power Drift = 0.10 dB
Peak SAR (extrapolated) = 27.6 W/kg
SAR(1 g) = 13.1 W/kg; SAR(10 g) = 6.01 W/kg
Smallest distance from peaks to all points 3 dB below = 9.9 mm
Ratio of SAR at M2 to SAR at M1 = 48.3%
Maximum value of SAR (measured) = 17.3 W/kg

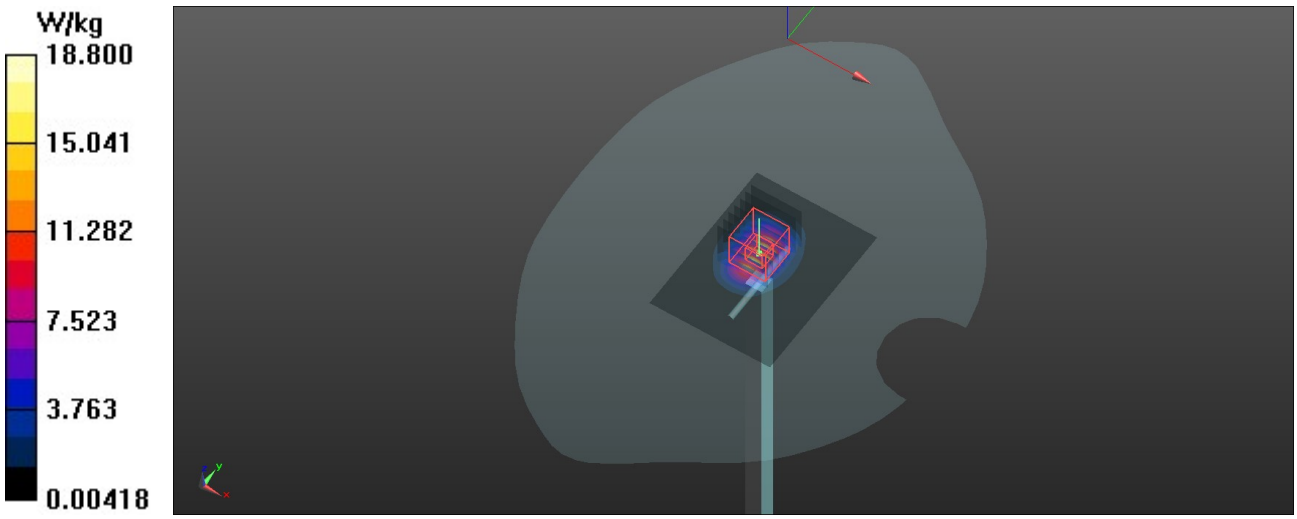

Test Laboratory: UnionTrust Date: 2024/4/5

System Check-D5GHz_H5250

DUT: Dipole D5GHzV2 SN:1115

Communication System: UID 0, CW; Frequency: 5250 MHz;Duty Cycle: 1:1
Medium: H5G Medium parameters used: f = 5250 MHz; σ = 4.735 S/m; ε_r = 36.296; ρ = 1000 kg/m^3

DASY4 Configuration:
- Probe: EX3DV4 - SN3578; ConvF(5.39, 5.39, 5.39) @ 5250 MHz; Calibrated: 2023/6/22
- Sensor-Surface: 1.4mm (Mechanical Surface Detection)
- Electronics: DAE4 Sn913; Calibrated: 2023/6/26
- Phantom: SAM 1; Type: QD 000 P40 CB; Serial: TP/1378
- Postprocessing SW: SEMCAD, V1.8 Build 186

Pin=100mW/Area Scan (91x91x1): Interpolated grid: dx=1.000 mm, dy=1.000 mm
Maximum value of SAR (interpolated) = 19.1 W/kg

Pin=100mW/Zoom Scan (8x8x7)/Cube 0: Measurement grid: dx=4mm, dy=4mm, dz=1.4mm
Reference Value = 73.12 V/m; Power Drift = -0.03 dB
Peak SAR (extrapolated) = 33.7 W/kg
SAR(1 g) = 8.25 W/kg; SAR(10 g) = 2.34 W/kg
Smallest distance from peaks to all points 3 dB below = 7.2 mm
Ratio of SAR at M2 to SAR at M1 = 64.7%
Maximum value of SAR (measured) = 19.4 W/kg

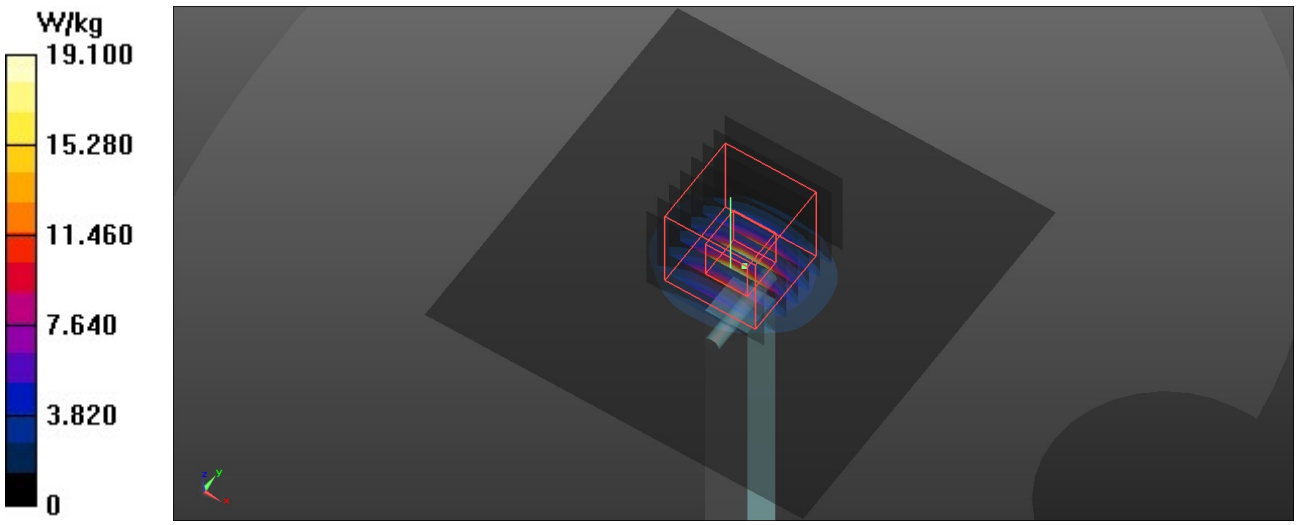

Test Laboratory: UnionTrust Date: 2024/4/5

System Check-D5GHz_H5600

DUT: Dipole D5GHzV2 SN:1115

Communication System: UID 0, CW; Frequency: 5600 MHz;Duty Cycle: 1:1
Medium: H5G Medium parameters used: f = 5600 MHz; σ = 5.092 S/m; ε_r = 35.786; ρ = 1000 kg/m^3

DASY4 Configuration:
- Probe: EX3DV4 - SN3578; ConvF(4.88, 4.88, 4.88) @ 5600 MHz; Calibrated: 2023/6/22
- Sensor-Surface: 1.4mm (Mechanical Surface Detection)
- Electronics: DAE4 Sn913; Calibrated: 2023/6/26
- Phantom: SAM 1; Type: QD 000 P40 CB; Serial: TP/1378
- Postprocessing SW: SEMCAD, V1.8 Build 186

Pin=100mW/Area Scan (91x91x1): Interpolated grid: dx=1.000 mm, dy=1.000 mm
Maximum value of SAR (interpolated) = 21.4 W/kg

Pin=100mW/Zoom Scan (8x8x7)/Cube 0: Measurement grid: dx=4mm, dy=4mm, dz=1.4mm
Reference Value = 74.31 V/m; Power Drift = -0.01 dB
Peak SAR (extrapolated) = 39.4 W/kg
SAR(1 g) = 8.82 W/kg; SAR(10 g) = 2.47 W/kg
Smallest distance from peaks to all points 3 dB below = 7.2 mm
Ratio of SAR at M2 to SAR at M1 = 61.8%
Maximum value of SAR (measured) = 21.3 W/kg

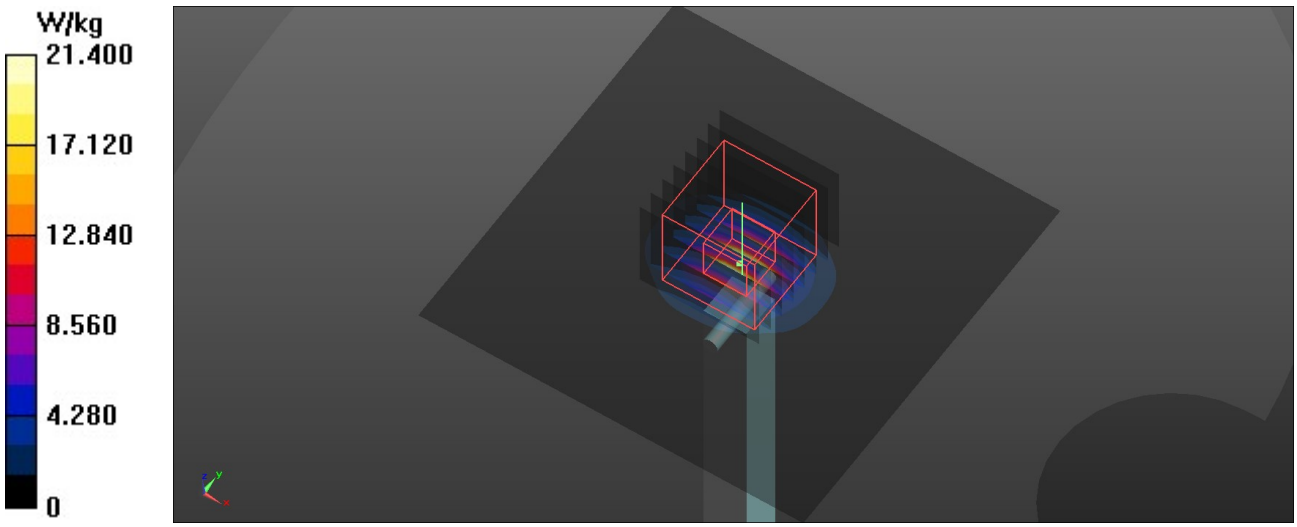

Test Laboratory: UnionTrust Date: 2024/4/5

System Check-D5GHz_H5800

DUT: Dipole D5GHzV2 SN:1115

Communication System: UID 0, CW; Frequency: 5800 MHz;Duty Cycle: 1:1
Medium: H5G Medium parameters used: f = 5800 MHz; σ = 5.305 S/m; ε_r = 35.501; ρ = 1000 kg/m^3

DASY4 Configuration:
- Probe: EX3DV4 - SN3578; ConvF(4.98, 4.98, 4.98) @ 5800 MHz; Calibrated: 2023/6/22
- Sensor-Surface: 1.4mm (Mechanical Surface Detection)
- Electronics: DAE4 Sn913; Calibrated: 2023/6/26
- Phantom: SAM 1; Type: QD 000 P40 CB; Serial: TP/1378
- Postprocessing SW: SEMCAD, V1.8 Build 186

Pin=100mW/Area Scan (91x91x1): Interpolated grid: dx=1.000 mm, dy=1.000 mm
Maximum value of SAR (interpolated) = 21.0 W/kg
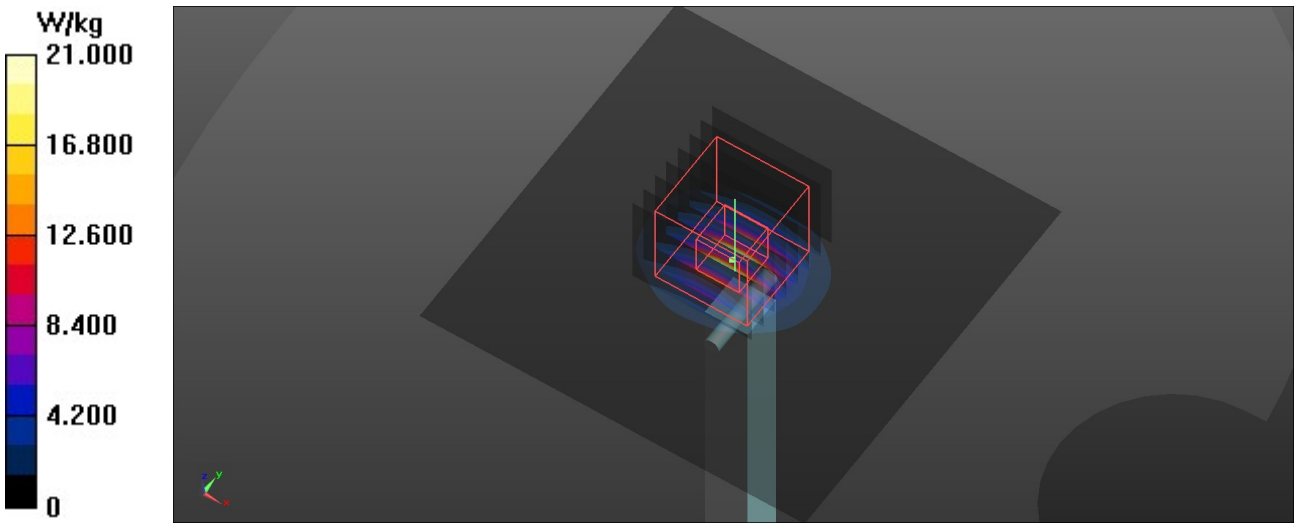
Pin=100mW/Zoom Scan (8x8x7)/Cube 0: Measurement grid: dx=4mm, dy=4mm, dz=1.4mm
Reference Value = 71.08 V/m; Power Drift = 0.03 dB
Peak SAR (extrapolated) = 41.1 W/kg
SAR(1 g) = 8.43 W/kg; SAR(10 g) = 2.36 W/kg
Smallest distance from peaks to all points 3 dB below = 7.5 mm
Ratio of SAR at M2 to SAR at M1 = 59.1%
Maximum value of SAR (measured) = 21.2 W/kg