System Check_H750_24dBm

DUT: Dipole 750 MHz

Communication System: CW; Frequency: 750 MHz;Duty Cycle: 1:1
Medium: H750 Medium parameters used: f = 750 MHz; σ = 0.873 mho/m; ε_r = 41.8; ρ = 1000 kg/m^3

DASY4 Configuration:
- Probe: ES3DV3 - SN3090; ConvF(6.42, 6.42, 6.42); Calibrated: 2023/3/15
- Sensor-Surface: 3mm (Mechanical Surface Detection)
- Electronics: DAE4 Sn662; Calibrated: 2023/3/8
- Phantom: SAM 1; Type: QD 000 P40 CB; Serial: TP/1378
- Postprocessing SW: SEMCAD, V1.8 Build 186

System check/Area Scan (51x71x1): Measurement grid: dx=15mm, dy=15mm
Maximum value of SAR (interpolated) = 2.34 mW/g

System check/Zoom Scan (5x5x7)/Cube 0: Measurement grid: dx=8mm, dy=8mm, dz=5mm
Reference Value = 53.3 V/m; Power Drift = 0.001 dB
Peak SAR (extrapolated) = 3.04 W/kg
SAR(1 g) = 2.06 mW/g; SAR(10 g) = 1.37 mW/g
Maximum value of SAR (measured) = 2.40 mW/g

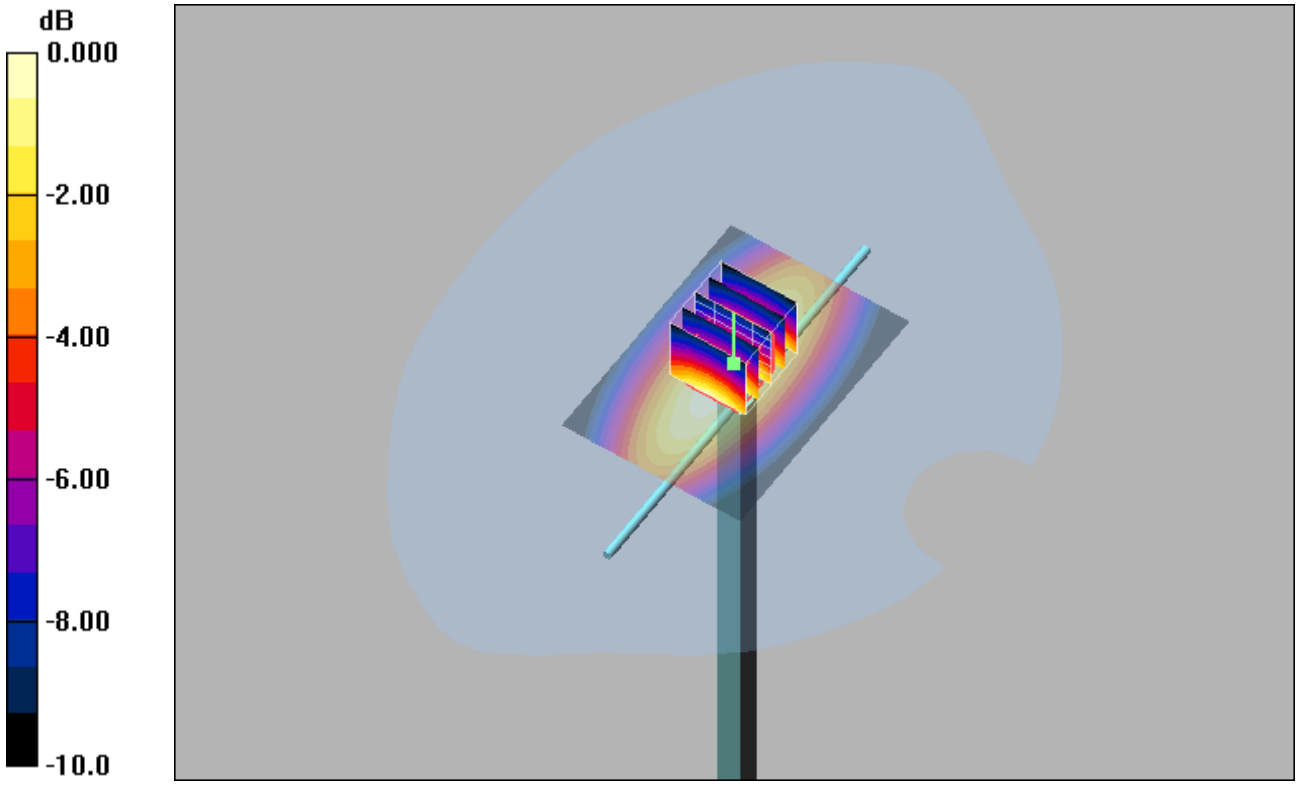

0 dB = 2.40mW/g

System Check_H750_24dBm

DUT: Dipole 750 MHz

Communication System: CW; Frequency: 750 MHz;Duty Cycle: 1:1
Medium: H750 Medium parameters used: f = 750 MHz; σ = 0.856 mho/m; ε_r = 41.5; ρ = 1000 kg/m^3

DASY4 Configuration:
- Probe: ES3DV3 - SN3090; ConvF(6.42, 6.42, 6.42); Calibrated: 2023/3/15
- Sensor-Surface: 3mm (Mechanical Surface Detection)
- Electronics: DAE4 Sn662; Calibrated: 2023/3/8
- Phantom: SAM 1; Type: QD 000 P40 CB; Serial: TP/1378
- Postprocessing SW: SEMCAD, V1.8 Build 186

System check/Area Scan (51x71x1): Measurement grid: dx=15mm, dy=15mm
Maximum value of SAR (interpolated) = 2.48 mW/g

System check/Zoom Scan (5x5x7)/Cube 0: Measurement grid: dx=8mm, dy=8mm, dz=5mm
Reference Value = 54.9 V/m; Power Drift = 0.008 dB
Peak SAR (extrapolated) = 3.22 W/kg
SAR(1 g) = 2.18 mW/g; SAR(10 g) = 1.45 mW/g
Maximum value of SAR (measured) = 2.53 mW/g

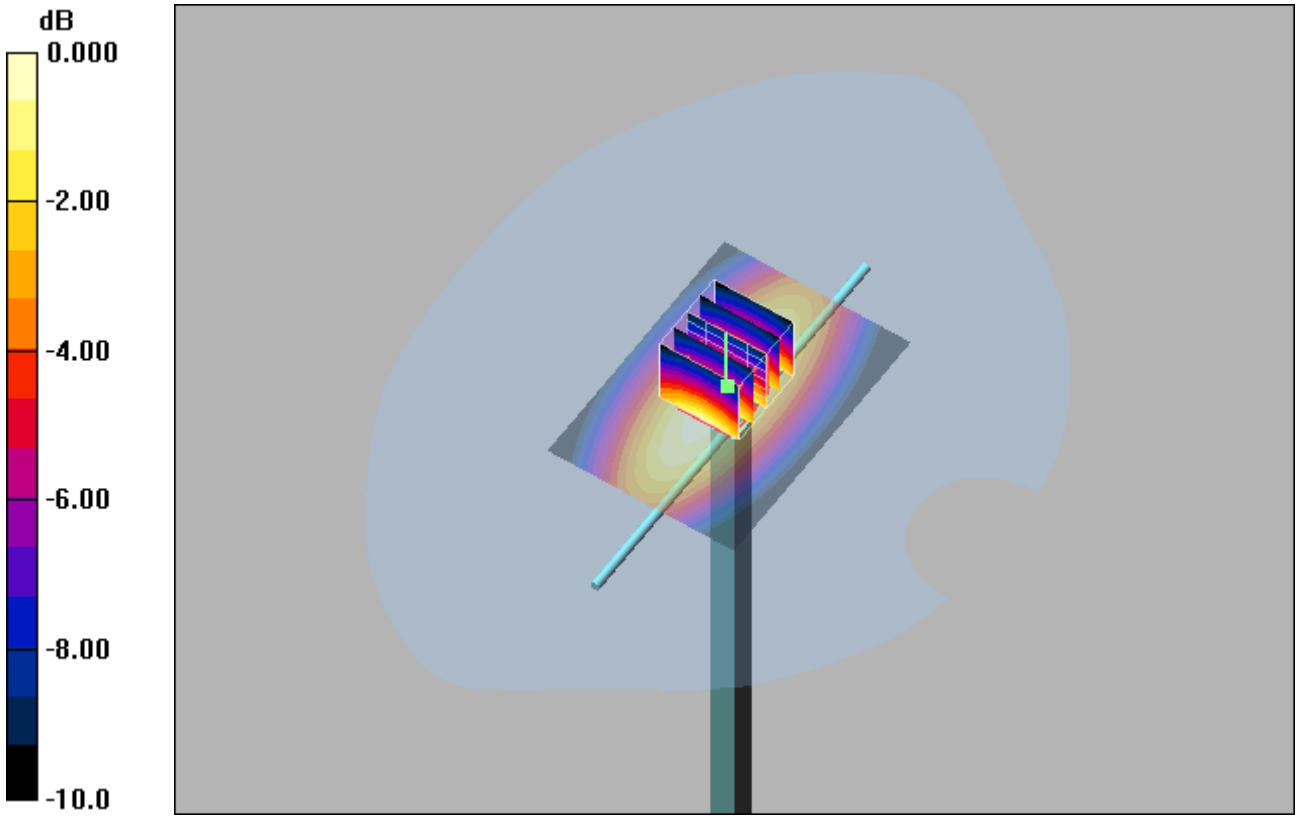

0 dB = 2.53mW/g

Test Laboratory: UnionTrust Date/Time: 2024/1/25

System Check_H835_24dBm

DUT: Dipole 835 MHz

Communication System: CW; Frequency: 835 MHz;Duty Cycle: 1:1
Medium: H835 Medium parameters used: f = 835 MHz; σ = 0.911 mho/m; ε_r = 41.1; ρ = 1000 kg/m^3

DASY4 Configuration:
- Probe: ES3DV3 - SN3090; ConvF(6.25, 6.25, 6.25); Calibrated: 2023/3/15
- Sensor-Surface: 3mm (Mechanical Surface Detection)
- Electronics: DAE4 Sn662; Calibrated: 2023/3/8
- Phantom: SAM 1; Type: QD 000 P40 CB; Serial: TP/1378
- Postprocessing SW: SEMCAD, V1.8 Build 186

System check/Area Scan (51x81x1): Measurement grid: dx=15mm, dy=15mm
Maximum value of SAR (interpolated) = 2.71 mW/g

System check/Zoom Scan (5x5x7)/Cube 0: Measurement grid: dx=8mm, dy=8mm, dz=5mm
Reference Value = 55.4 V/m; Power Drift = 0.012 dB
Peak SAR (extrapolated) = 3.40 W/kg
SAR(1 g) = 2.31 mW/g; SAR(10 g) = 1.53 mW/g
Maximum value of SAR (measured) = 2.69 mW/g

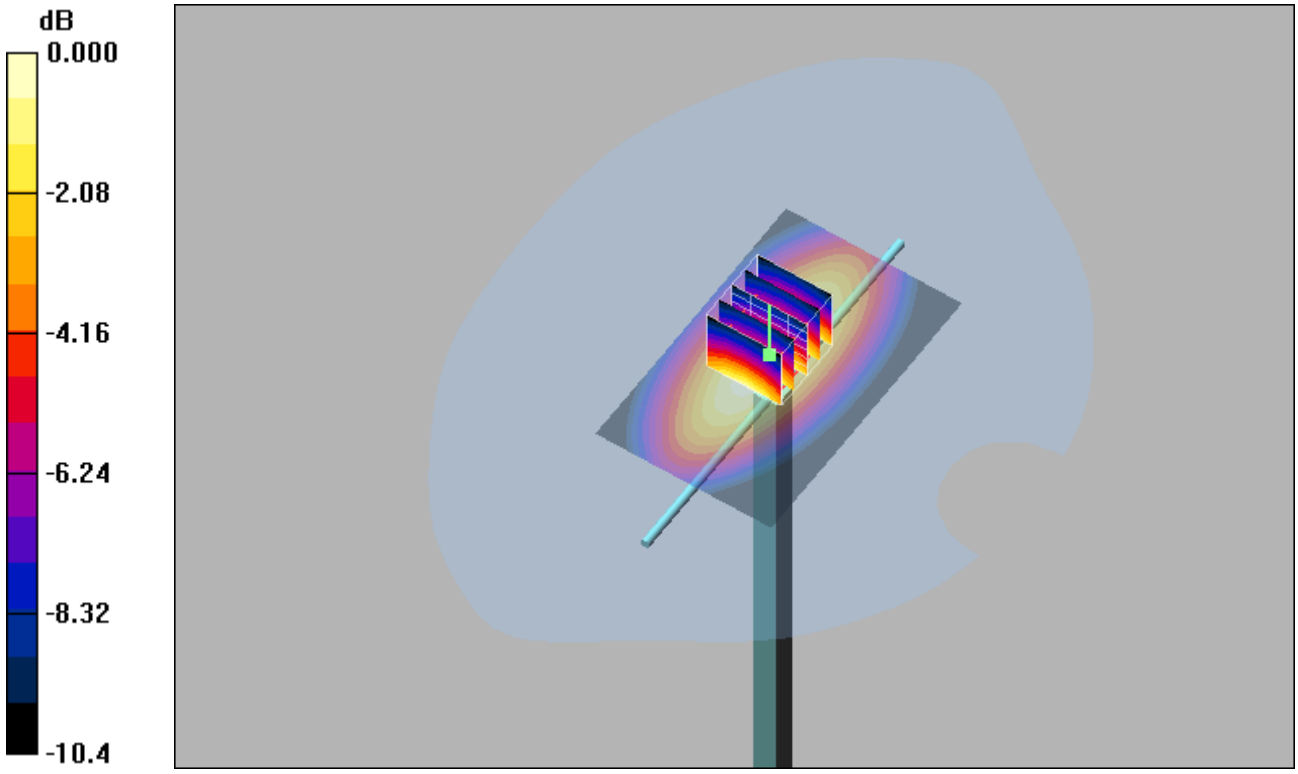

0 dB = 2.69mW/g

Test Laboratory: UnionTrust Date/Time: 2024/1/26

System Check_H835_24dBm

DUT: Dipole 835 MHz

Communication System: CW; Frequency: 835 MHz;Duty Cycle: 1:1
Medium: H835 Medium parameters used: f = 835 MHz; σ = 0.915 mho/m; ε_r = 41.2; ρ = 1000 kg/m^3

DASY4 Configuration:
- Probe: ES3DV3 - SN3090; ConvF(6.25, 6.25, 6.25); Calibrated: 2023/3/15
- Sensor-Surface: 3mm (Mechanical Surface Detection)
- Electronics: DAE4 Sn662; Calibrated: 2023/3/8
- Phantom: SAM 1; Type: QD 000 P40 CB; Serial: TP/1378
- Postprocessing SW: SEMCAD, V1.8 Build 186

System check/Area Scan (51x81x1): Measurement grid: dx=15mm, dy=15mm
Maximum value of SAR (interpolated) = 2.65 mW/g

System check/Zoom Scan (5x5x7)/Cube 0: Measurement grid: dx=8mm, dy=8mm, dz=5mm
Reference Value = 55.4 V/m; Power Drift = -0.145 dB
Peak SAR (extrapolated) = 3.31 W/kg
SAR(1 g) = 2.25 mW/g; SAR(10 g) = 1.48 mW/g
Maximum value of SAR (measured) = 2.61 mW/g

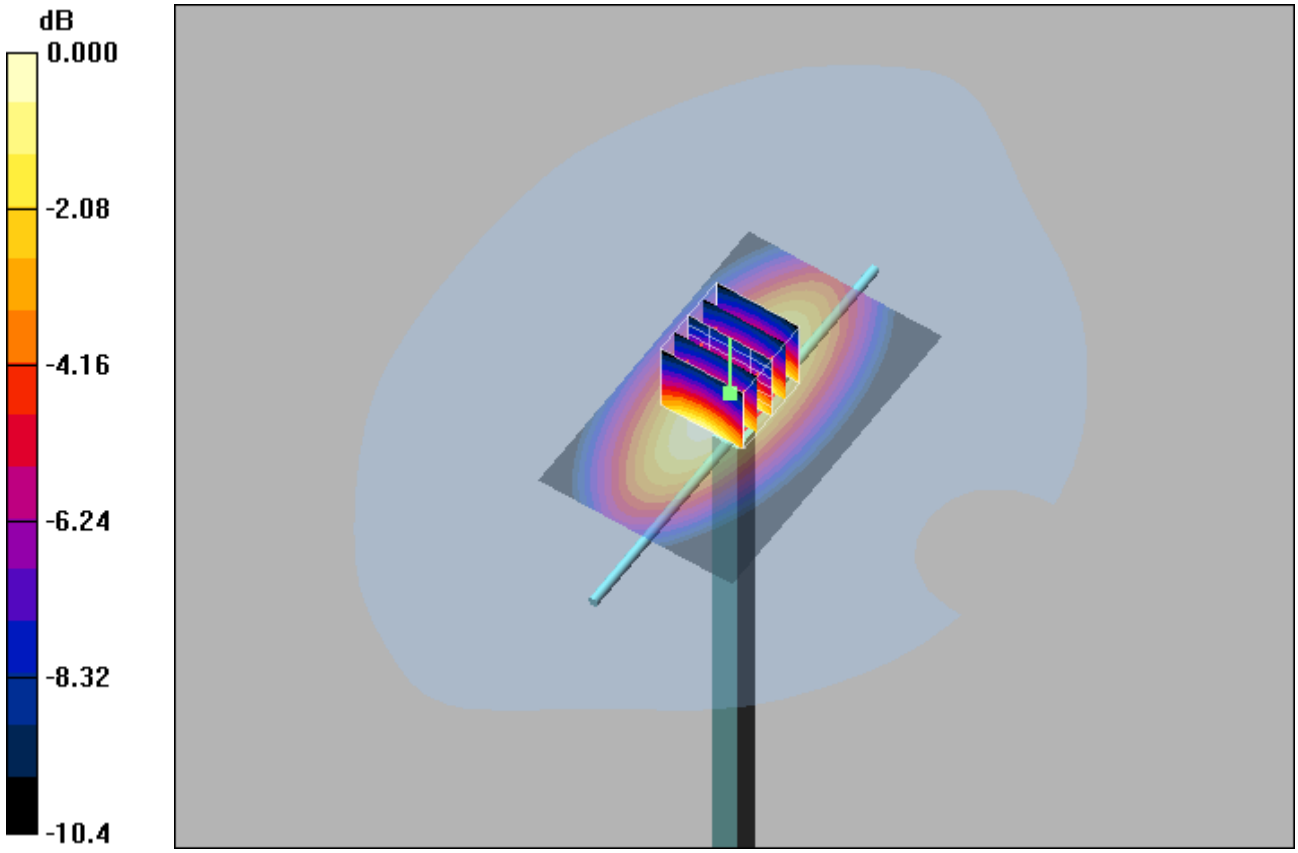

0 dB = 2.61mW/g

System Check_H1750_24dBm

DUT: Dipole 1750 MHz

Communication System: CW; Frequency: 1750 MHz;Duty Cycle: 1:1
Medium: H1750 Medium parameters used: f = 1750 MHz; σ = 1.37 mho/m; ε_r = 39.5; ρ = 1000 kg/m^3

DASY4 Configuration:
- Probe: ES3DV3 - SN3090; ConvF(5.37, 5.37, 5.37); Calibrated: 2023/3/15
- Sensor-Surface: 3mm (Mechanical Surface Detection)
- Electronics: DAE4 Sn662; Calibrated: 2023/3/8
- Phantom: SAM 1; Type: QD 000 P40 CB; Serial: TP/1378
- Postprocessing SW: SEMCAD, V1.8 Build 186

System check/Area Scan (51x81x1): Measurement grid: dx=15mm, dy=15mm
Maximum value of SAR (interpolated) = 12.2 mW/g

System check/Zoom Scan (5x5x7)/Cube 0: Measurement grid: dx=8mm, dy=8mm, dz=5mm
Reference Value = 87.4 V/m; Power Drift = 0.118 dB
Peak SAR (extrapolated) = 17.1 W/kg
SAR(1 g) = 9.27 mW/g; SAR(10 g) = 4.81 mW/g
Maximum value of SAR (measured) = 11.7 mW/g

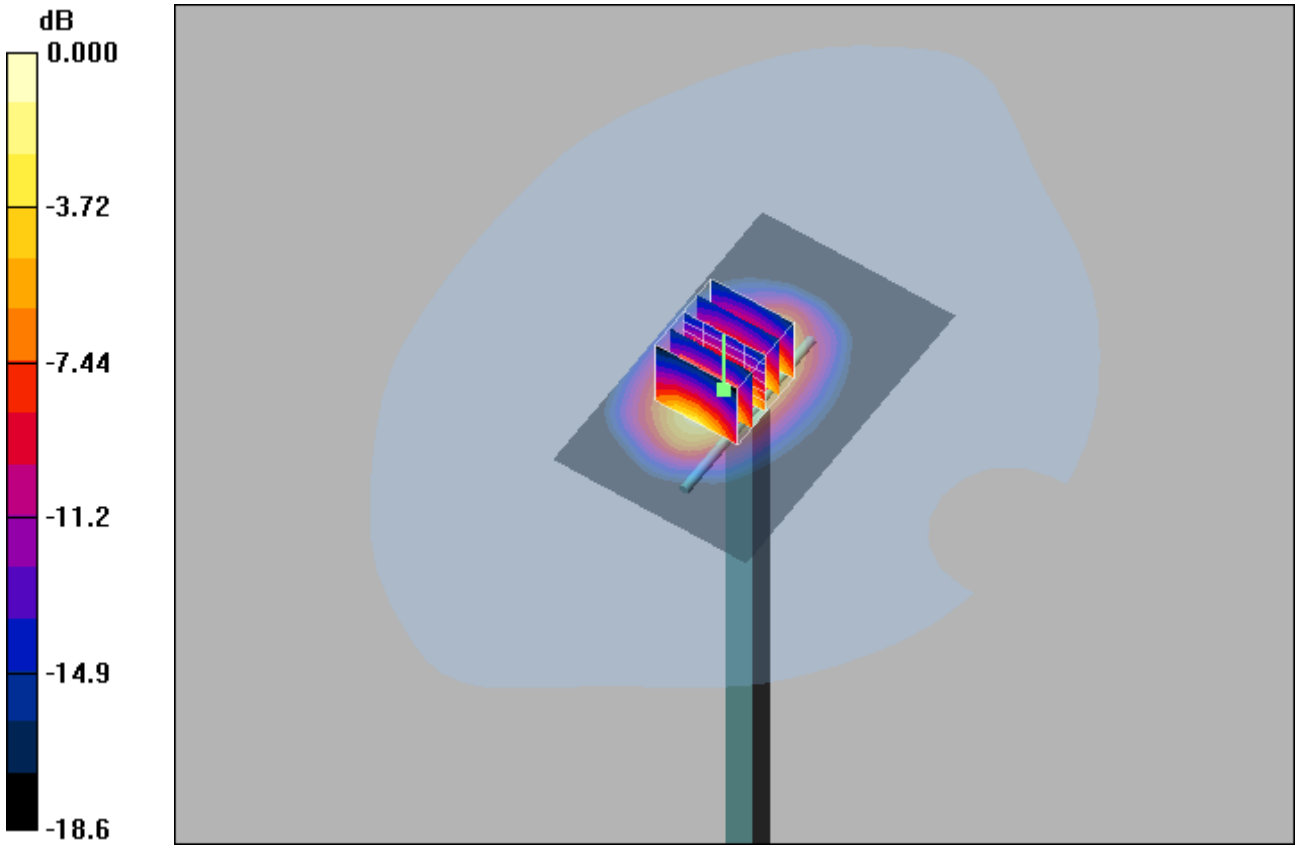

0 dB = 11.7mW/g

System Check_H1750_24dBm

DUT: Dipole 1750 MHz

Communication System: CW; Frequency: 1750 MHz;Duty Cycle: 1:1
Medium: H1750 Medium parameters used: f = 1750 MHz; σ = 1.38 mho/m; ε_r = 39.4; ρ = 1000 kg/m^3

DASY4 Configuration:
- Probe: ES3DV3 - SN3090; ConvF(5.37, 5.37, 5.37); Calibrated: 2023/3/15
- Sensor-Surface: 3mm (Mechanical Surface Detection)
- Electronics: DAE4 Sn662; Calibrated: 2023/3/8
- Phantom: SAM 1; Type: QD 000 P40 CB; Serial: TP/1378
- Postprocessing SW: SEMCAD, V1.8 Build 186

System check/Area Scan (51x81x1): Measurement grid: dx=15mm, dy=15mm
Maximum value of SAR (interpolated) = 11.7 mW/g

System check/Zoom Scan (5x5x7)/Cube 0: Measurement grid: dx=8mm, dy=8mm, dz=5mm
Reference Value = 84.5 V/m; Power Drift = 0.194 dB
Peak SAR (extrapolated) = 16.5 W/kg
SAR(1 g) = 8.91 mW/g; SAR(10 g) = 4.62 mW/g
Maximum value of SAR (measured) = 11.2 mW/g

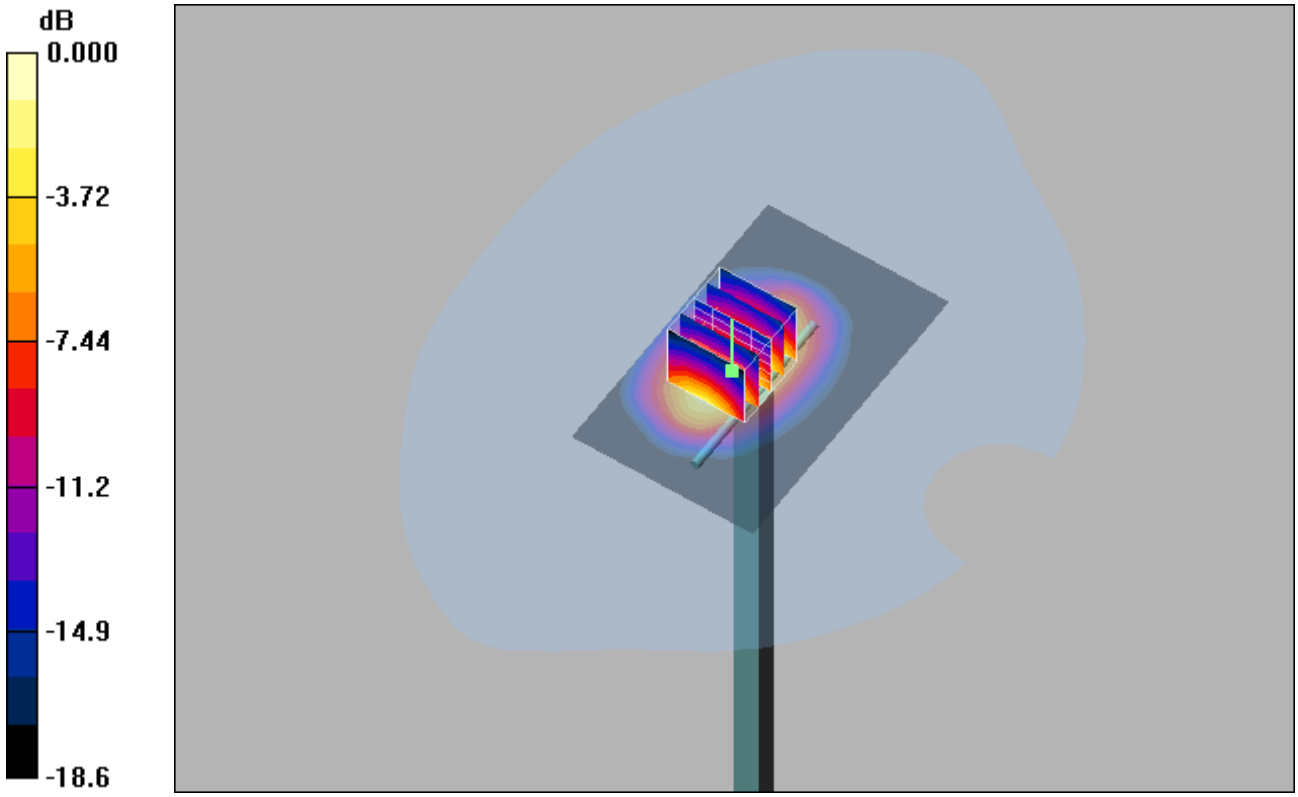

0 dB = 11.2mW/g

System Check_H1900_24dBm

DUT: Dipole 1900 MHz

Communication System: CW; Frequency: 1900 MHz;Duty Cycle: 1:1
Medium: H1900 Medium parameters used: f = 1900 MHz; σ = 1.34 mho/m; ε_r = 39.2; ρ = 1000 kg/m^3

DASY4 Configuration:
- Probe: ES3DV3 - SN3090; ConvF(5.11, 5.11, 5.11); Calibrated: 2023/3/15
- Sensor-Surface: 3mm (Mechanical Surface Detection)
- Electronics: DAE4 Sn662; Calibrated: 2023/3/8
- Phantom: SAM 1; Type: QD 000 P40 CB; Serial: TP/1378
- Postprocessing SW: SEMCAD, V1.8 Build 186

System check/Area Scan (51x81x1): Measurement grid: dx=15mm, dy=15mm
Maximum value of SAR (interpolated) = 12.5 mW/g

System check/Zoom Scan (5x5x7)/Cube 0: Measurement grid: dx=8mm, dy=8mm, dz=5mm
Reference Value = 73.1 V/m; Power Drift = 0.152 dB
Peak SAR (extrapolated) = 18.3 W/kg
SAR(1 g) = 9.55 mW/g; SAR(10 g) = 4.77 mW/g
Maximum value of SAR (measured) = 12.3 mW/g

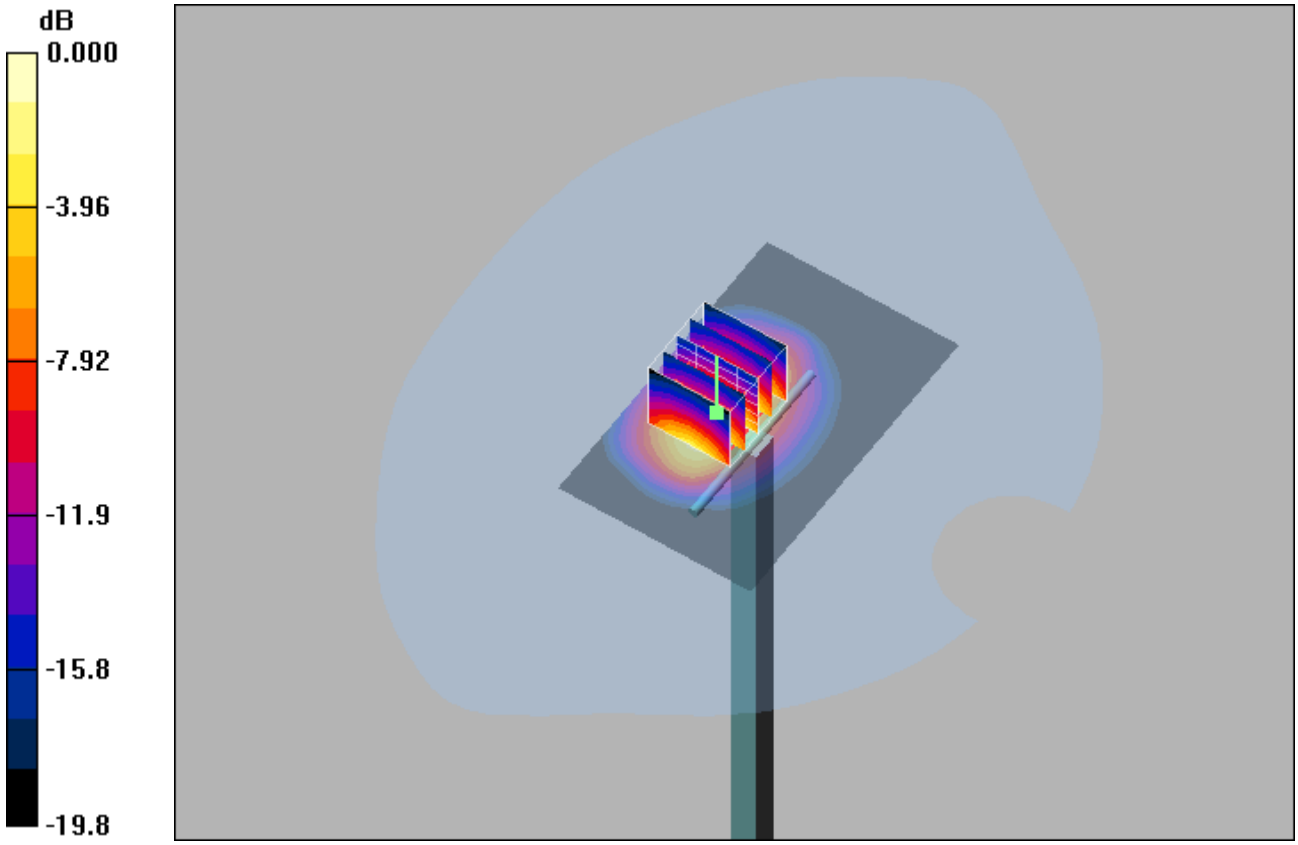

0 dB = 12.3mW/g

System Check_H1900_24dBm

DUT: Dipole 1900 MHz

Communication System: CW; Frequency: 1900 MHz;Duty Cycle: 1:1
Medium: H1900 Medium parameters used: f = 1900 MHz; σ = 1.37 mho/m; ε_r = 39.4; ρ = 1000 kg/m^3

DASY4 Configuration:
- Probe: ES3DV3 - SN3090; ConvF(5.11, 5.11, 5.11); Calibrated: 2023/3/15
- Sensor-Surface: 3mm (Mechanical Surface Detection)
- Electronics: DAE4 Sn662; Calibrated: 2023/3/8
- Phantom: SAM 1; Type: QD 000 P40 CB; Serial: TP/1378
- Postprocessing SW: SEMCAD, V1.8 Build 186

System check/Area Scan (51x81x1): Measurement grid: dx=15mm, dy=15mm
Maximum value of SAR (interpolated) = 13.0 mW/g

System check/Zoom Scan (5x5x7)/Cube 0: Measurement grid: dx=8mm, dy=8mm, dz=5mm
Reference Value = 74.2 V/m; Power Drift = 0.133 dB
Peak SAR (extrapolated) = 19.1 W/kg
SAR(1 g) = 9.93 mW/g; SAR(10 g) = 4.95 mW/g
Maximum value of SAR (measured) = 12.8 mW/g

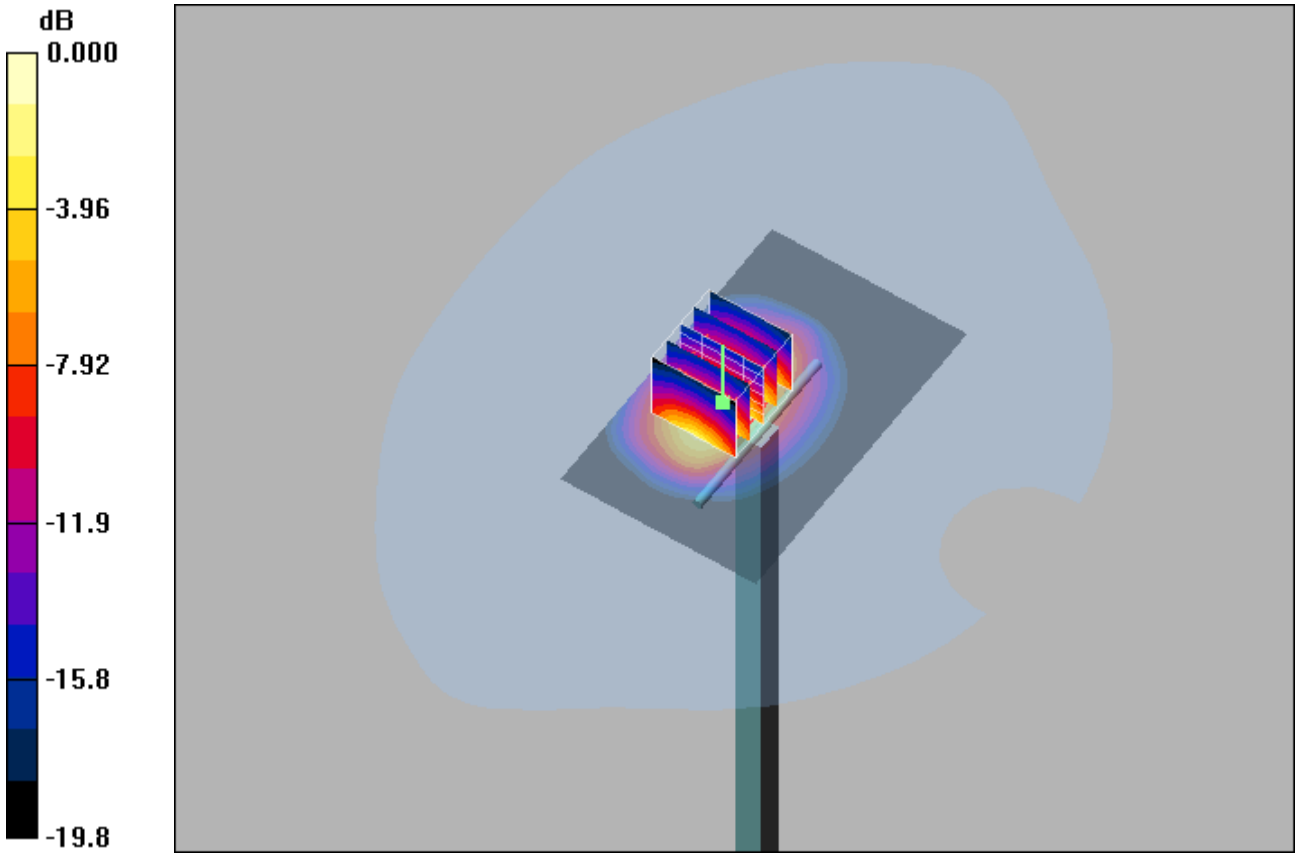

0 dB = 12.8mW/g

System Check_H2300_24dBm

DUT: Dipole 2300 MHz

Communication System: CW; Frequency: 2300 MHz;Duty Cycle: 1:1
Medium: H2300 Medium parameters used: f = 2300 MHz; σ = 1.71 mho/m; ε_r = 38.7; ρ = 1000 kg/m^3

DASY4 Configuration:
- Probe: ES3DV3 - SN3090; ConvF(4.92, 4.92, 4.92); Calibrated: 2023/3/15
- Sensor-Surface: 3mm (Mechanical Surface Detection)
- Electronics: DAE4 Sn662; Calibrated: 2023/3/8
- Phantom: SAM 1; Type: QD 000 P40 CB; Serial: TP/1378
- Postprocessing SW: SEMCAD, V1.8 Build 186

System check/Area Scan (61x81x1): Measurement grid: dx=12mm, dy=12mm
Maximum value of SAR (interpolated) = 16.6 mW/g

System check/Zoom Scan (7x7x7)/Cube 0: Measurement grid: dx=5mm, dy=5mm, dz=5mm
Reference Value = 94.7 V/m; Power Drift = 0.070 dB
Peak SAR (extrapolated) = 24.4 W/kg
SAR(1 g) = 11.6 mW/g; SAR(10 g) = 5.33 mW/g
Maximum value of SAR (measured) = 15.4 mW/g

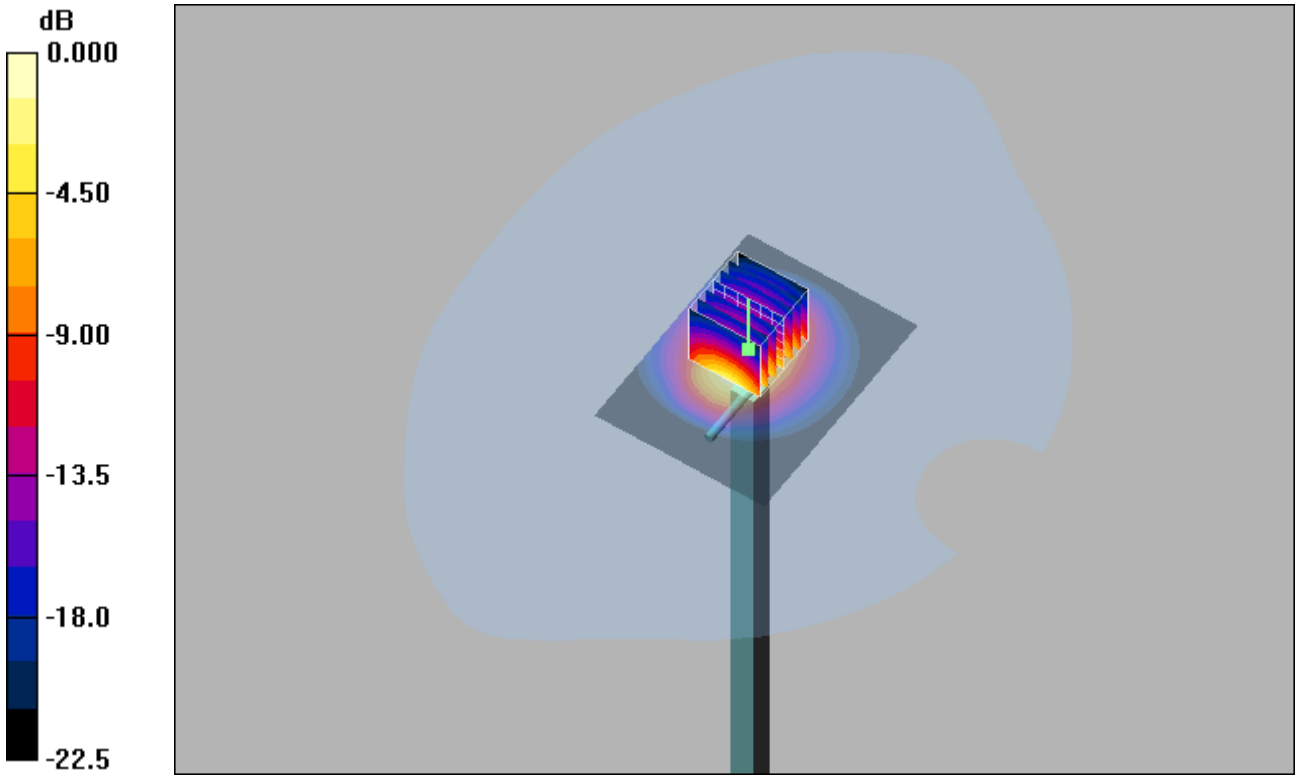

0 dB = 15.4mW/g

Test Laboratory: UnionTrust Date/Time: 2024/2/2

System Check_H2300_24dBm

DUT: Dipole 2300 MHz

Communication System: CW; Frequency: 2300 MHz;Duty Cycle: 1:1
Medium: H2300 Medium parameters used: f = 2300 MHz; σ = 1.69 mho/m; ε_r = 38.5; ρ = 1000 kg/m^3

DASY4 Configuration:
- Probe: ES3DV3 - SN3090; ConvF(4.92, 4.92, 4.92); Calibrated: 2023/3/15
- Sensor-Surface: 3mm (Mechanical Surface Detection)
- Electronics: DAE4 Sn662; Calibrated: 2023/3/8
- Phantom: SAM 1; Type: QD 000 P40 CB; Serial: TP/1378
- Postprocessing SW: SEMCAD, V1.8 Build 186

System check/Area Scan (61x81x1): Measurement grid: dx=12mm, dy=12mm
Maximum value of SAR (interpolated) = 17.3 mW/g

System check/Zoom Scan (7x7x7)/Cube 0: Measurement grid: dx=5mm, dy=5mm, dz=5mm
Reference Value = 96.3 V/m; Power Drift = 0.074 dB
Peak SAR (extrapolated) = 25.3 W/kg
SAR(1 g) = 12 mW/g; SAR(10 g) = 5.52 mW/g
Maximum value of SAR (measured) = 16.0 mW/g

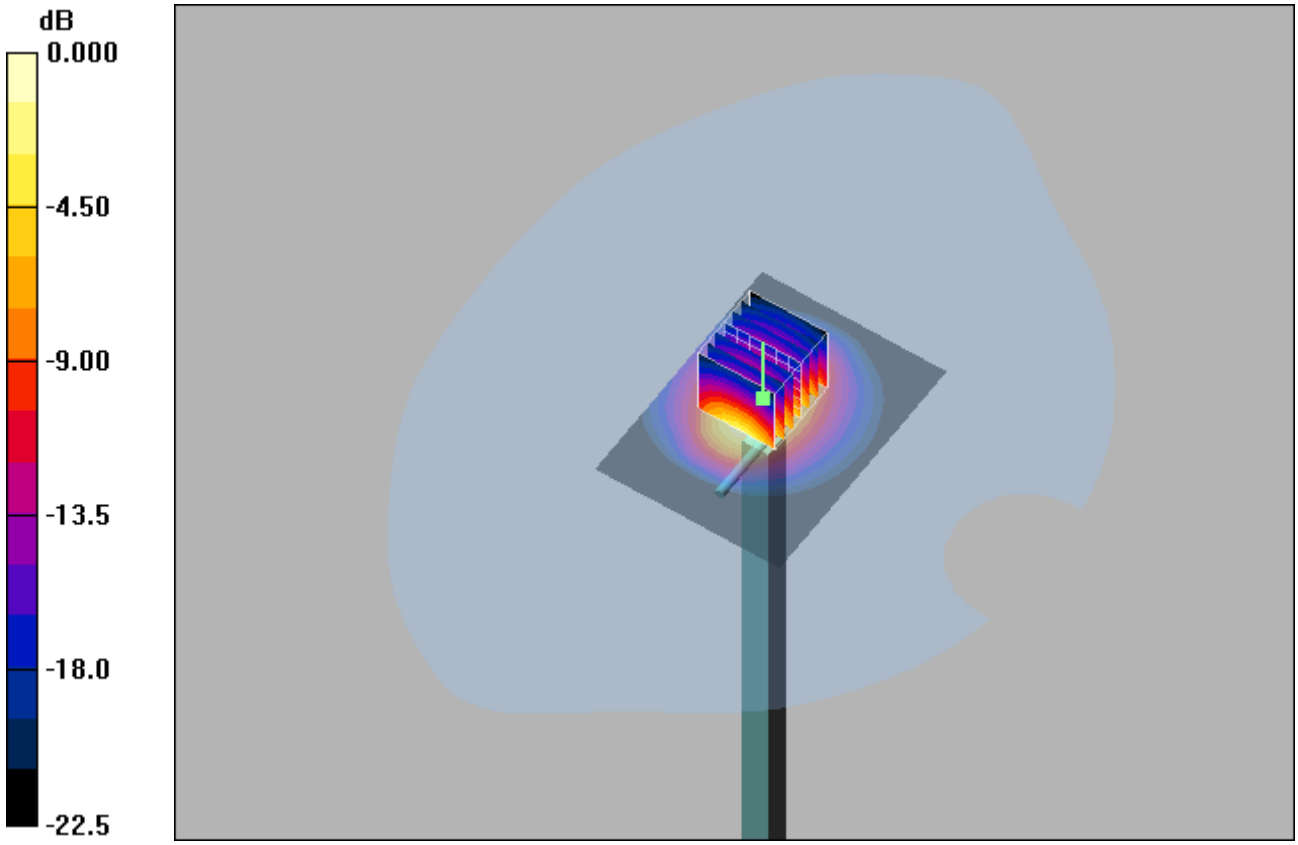

0 dB = 16.0mW/g

System Check_H2300_24dBm

DUT: Dipole 2300 MHz

Communication System: CW; Frequency: 2300 MHz;Duty Cycle: 1:1
Medium: H2300 Medium parameters used: f = 2300 MHz; σ = 1.73 mho/m; ε_r = 38.3; ρ = 1000 kg/m^3

DASY4 Configuration:
- Probe: ES3DV3 - SN3090; ConvF(4.92, 4.92, 4.92); Calibrated: 2023/3/15
- Sensor-Surface: 3mm (Mechanical Surface Detection)
- Electronics: DAE4 Sn662; Calibrated: 2023/3/8
- Phantom: SAM 1; Type: QD 000 P40 CB; Serial: TP/1378
- Postprocessing SW: SEMCAD, V1.8 Build 186

System check/Area Scan (61x81x1): Measurement grid: dx=12mm, dy=12mm
Maximum value of SAR (interpolated) = 17.1 mW/g

System check/Zoom Scan (7x7x7)/Cube 0: Measurement grid: dx=5mm, dy=5mm, dz=5mm
Reference Value = 90.9 V/m; Power Drift = 0.111 dB
Peak SAR (extrapolated) = 24.9 W/kg
SAR(1 g) = 11.9 mW/g; SAR(10 g) = 5.5 mW/g
Maximum value of SAR (measured) = 16.0 mW/g

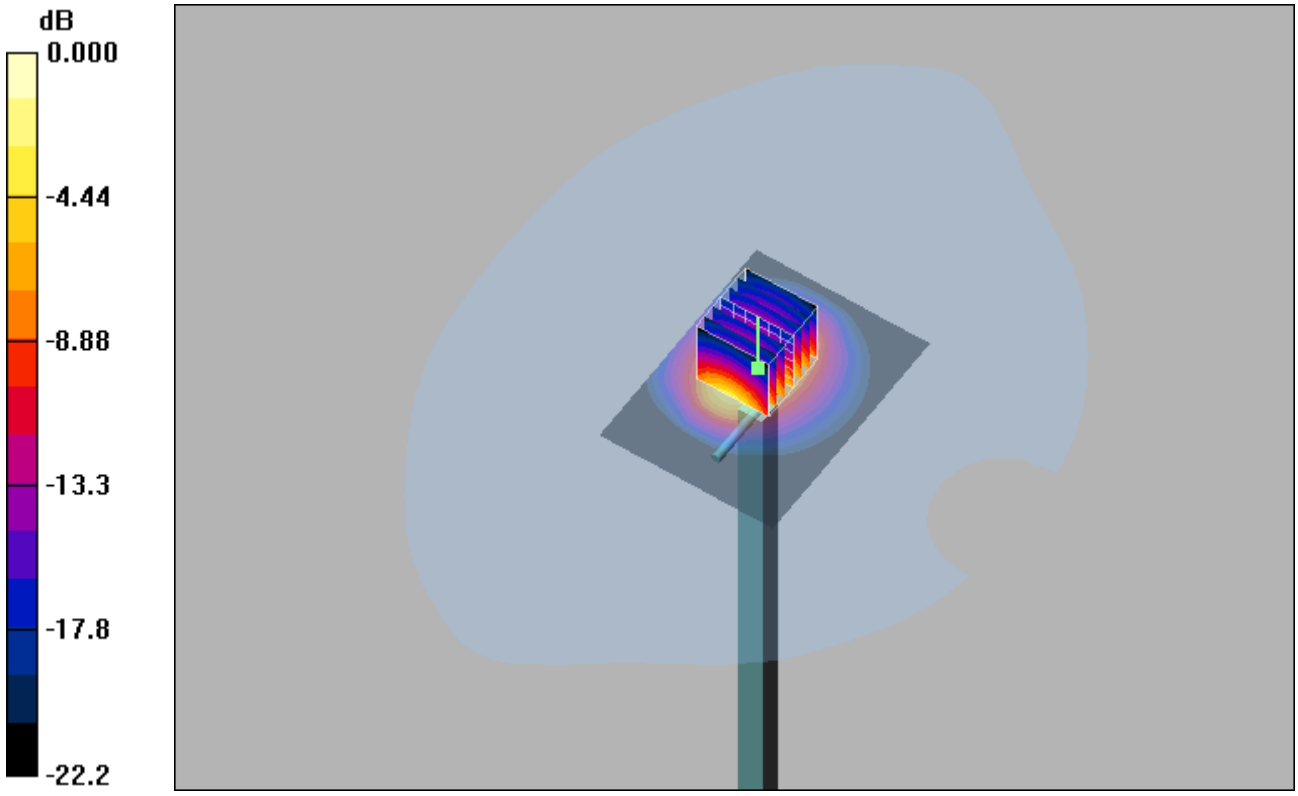

0 dB = 16.0mW/g

Test Laboratory: UnionTrust Date/Time: 2024/2/2

System Check_H2450_24dBm

DUT: Dipole 2450 MHz

Communication System: CW; Frequency: 2450 MHz;Duty Cycle: 1:1
Medium: H2450 Medium parameters used: f = 2450 MHz; σ = 1.74 mho/m; ε_r = 38.3; ρ = 1000 kg/m^3

DASY4 Configuration:
- Probe: ES3DV3 - SN3090; ConvF(4.68, 4.68, 4.68); Calibrated: 2023/3/15
- Sensor-Surface: 3mm (Mechanical Surface Detection)
- Electronics: DAE4 Sn662; Calibrated: 2023/3/8
- Phantom: SAM 1; Type: QD 000 P40 CB; Serial: TP/1378
- Postprocessing SW: SEMCAD, V1.8 Build 186

System check/Area Scan (61x81x1): Measurement grid: dx=12mm, dy=12mm
Maximum value of SAR (interpolated) = 18.8 mW/g

System check/Zoom Scan (7x7x7)/Cube 0: Measurement grid: dx=5mm, dy=5mm, dz=5mm
Reference Value = 96.4 V/m; Power Drift = 0.068 dB
Peak SAR (extrapolated) = 27.4 W/kg
SAR(1 g) = 13.2 mW/g; SAR(10 g) = 6.05 mW/g
Maximum value of SAR (measured) = 17.6 mW/g

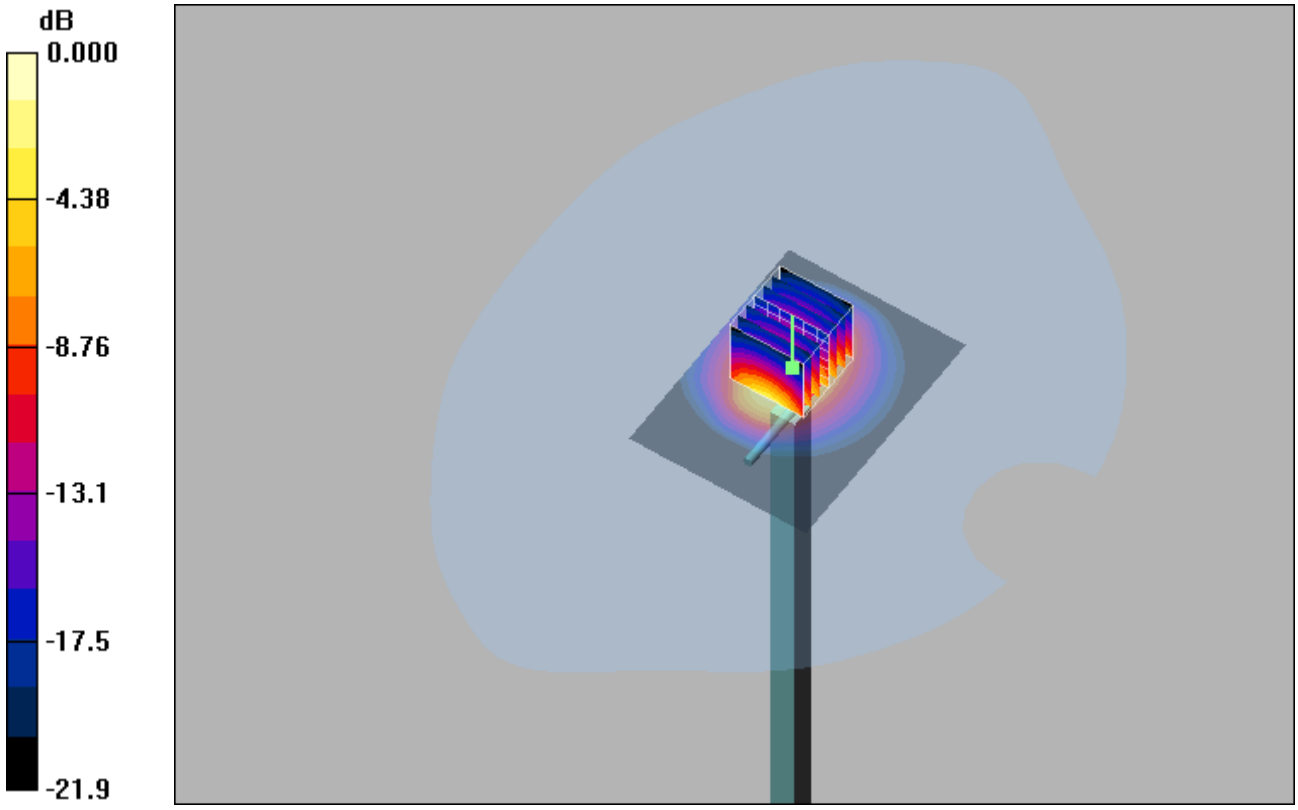

0 dB = 17.6mW/g

System Check_H2450_24dBm

DUT: Dipole 2450 MHz

Communication System: CW; Frequency: 2450 MHz;Duty Cycle: 1:1
Medium: H2450 Medium parameters used: f = 2450 MHz; σ = 1.76 mho/m; ε_r = 38.6; ρ = 1000 kg/m^3

DASY4 Configuration:
- Probe: ES3DV3 - SN3090; ConvF(4.68, 4.68, 4.68); Calibrated: 2023/3/15
- Sensor-Surface: 3mm (Mechanical Surface Detection)
- Electronics: DAE4 Sn662; Calibrated: 2023/3/8
- Phantom: SAM 1; Type: QD 000 P40 CB; Serial: TP/1378
- Postprocessing SW: SEMCAD, V1.8 Build 186

System check/Area Scan (61x81x1): Measurement grid: dx=12mm, dy=12mm
Maximum value of SAR (interpolated) = 19.4 mW/g

System check/Zoom Scan (7x7x7)/Cube 0: Measurement grid: dx=5mm, dy=5mm, dz=5mm
Reference Value = 100.9 V/m; Power Drift = 0.086 dB
Peak SAR (extrapolated) = 27.7 W/kg
SAR(1 g) = 13.3 mW/g; SAR(10 g) = 6.15 mW/g
Maximum value of SAR (measured) = 17.5 mW/g

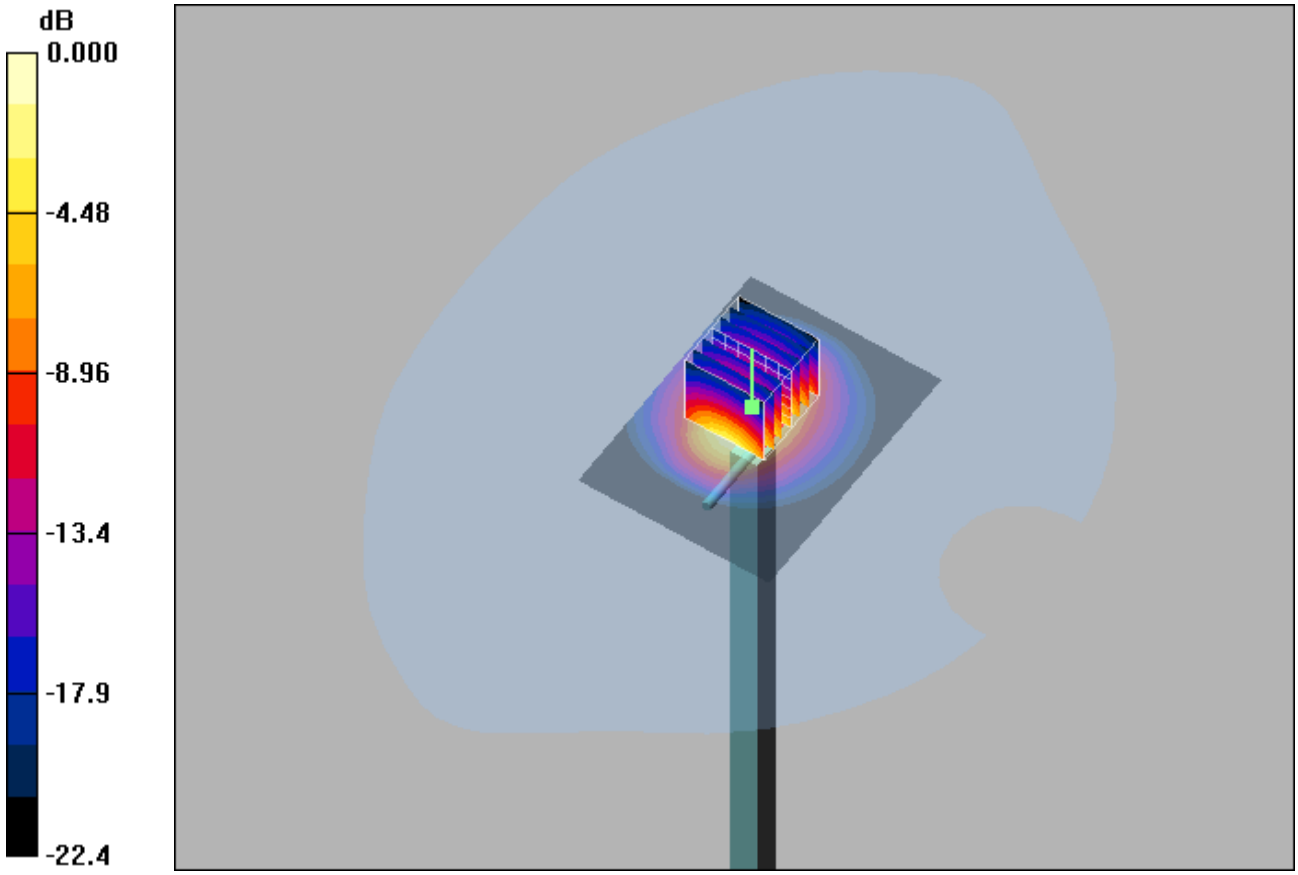

0 dB = 17.5mW/g

Test Laboratory: UnionTrust Date/Time: 2024/1/12

System Check_H2600_24dBm

DUT: Dipole 2600 MHz

Communication System: CW; Frequency: 2600 MHz;Duty Cycle: 1:1
Medium: H2600 Medium parameters used: f = 2600 MHz; σ = 1.96 mho/m; ε_r = 38.1; ρ = 1000 kg/m^3

DASY4 Configuration:
- Probe: ES3DV3 - SN3090; ConvF(4.53, 4.53, 4.53); Calibrated: 2023/3/15
- Sensor-Surface: 3mm (Mechanical Surface Detection)
- Electronics: DAE4 Sn662; Calibrated: 2023/3/8
- Phantom: SAM 1; Type: QD 000 P40 CB; Serial: TP/1378
- Postprocessing SW: SEMCAD, V1.8 Build 186

System check/Area Scan (61x81x1): Measurement grid: dx=12mm, dy=12mm
Maximum value of SAR (interpolated) = 19.9 mW/g

System check/Zoom Scan (7x7x7)/Cube 0: Measurement grid: dx=5mm, dy=5mm, dz=5mm
Reference Value = 96.9 V/m; Power Drift = 0.042 dB
Peak SAR (extrapolated) = 30.4 W/kg
SAR(1 g) = 13.6 mW/g; SAR(10 g) = 6 mW/g
Maximum value of SAR (measured) = 18.4 mW/g

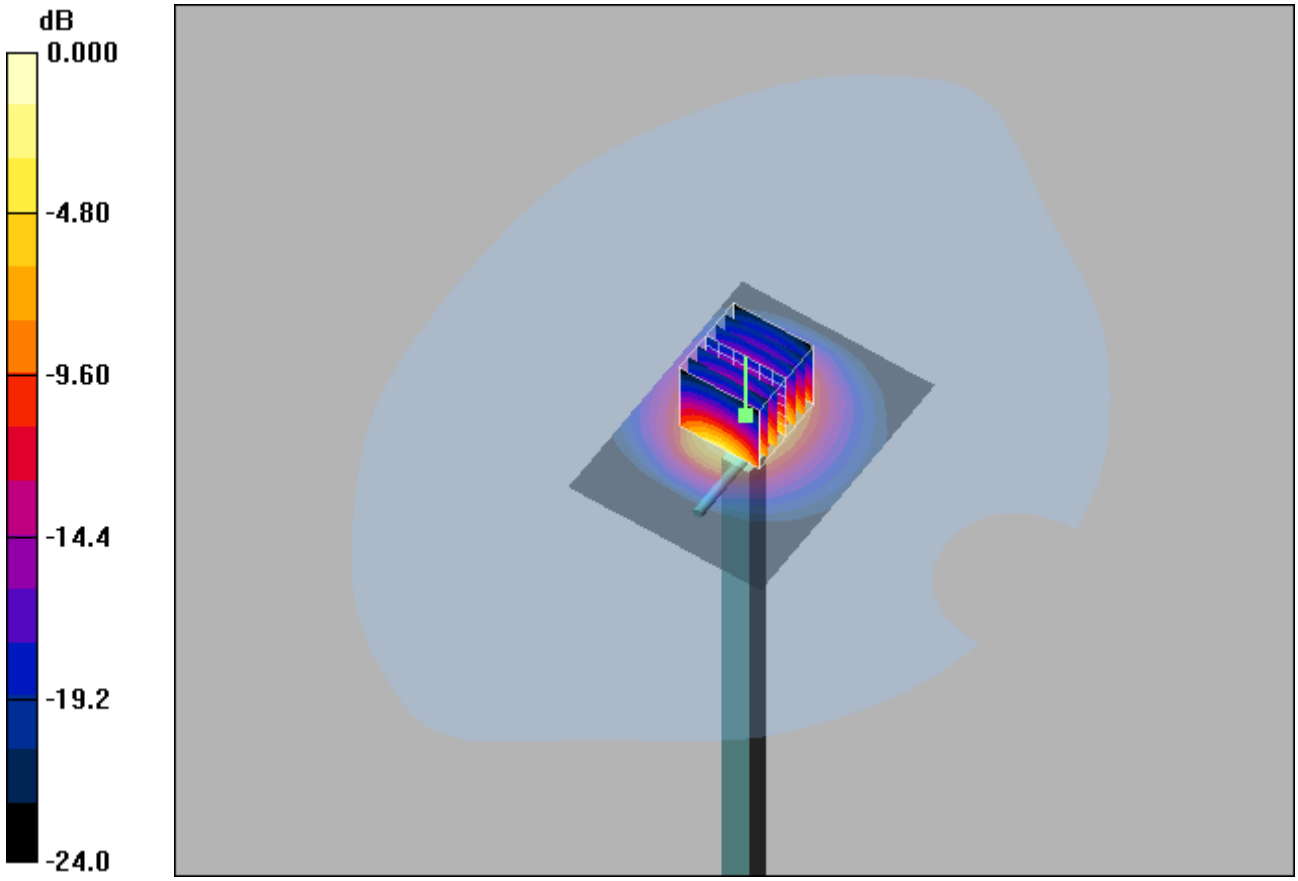

0 dB = 18.4mW/g

System Check_H2600_24dBm

DUT: Dipole 2600 MHz

Communication System: CW; Frequency: 2600 MHz;Duty Cycle: 1:1
Medium: H2600 Medium parameters used: f = 2600 MHz; σ = 1.94 mho/m; ε_r = 37.9; ρ = 1000 kg/m^3

DASY4 Configuration:
- Probe: ES3DV3 - SN3090; ConvF(4.53, 4.53, 4.53); Calibrated: 2023/3/15
- Sensor-Surface: 3mm (Mechanical Surface Detection)
- Electronics: DAE4 Sn662; Calibrated: 2023/3/8
- Phantom: SAM 1; Type: QD 000 P40 CB; Serial: TP/1378
- Postprocessing SW: SEMCAD, V1.8 Build 186

System check/Area Scan (61x81x1): Measurement grid: dx=12mm, dy=12mm
Maximum value of SAR (interpolated) = 21.3 mW/g

System check/Zoom Scan (7x7x7)/Cube 0: Measurement grid: dx=5mm, dy=5mm, dz=5mm
Reference Value = 97.3 V/m; Power Drift = 0.137 dB
Peak SAR (extrapolated) = 32.5 W/kg
SAR(1 g) = 14.6 mW/g; SAR(10 g) = 6.38 mW/g
Maximum value of SAR (measured) = 19.6 mW/g

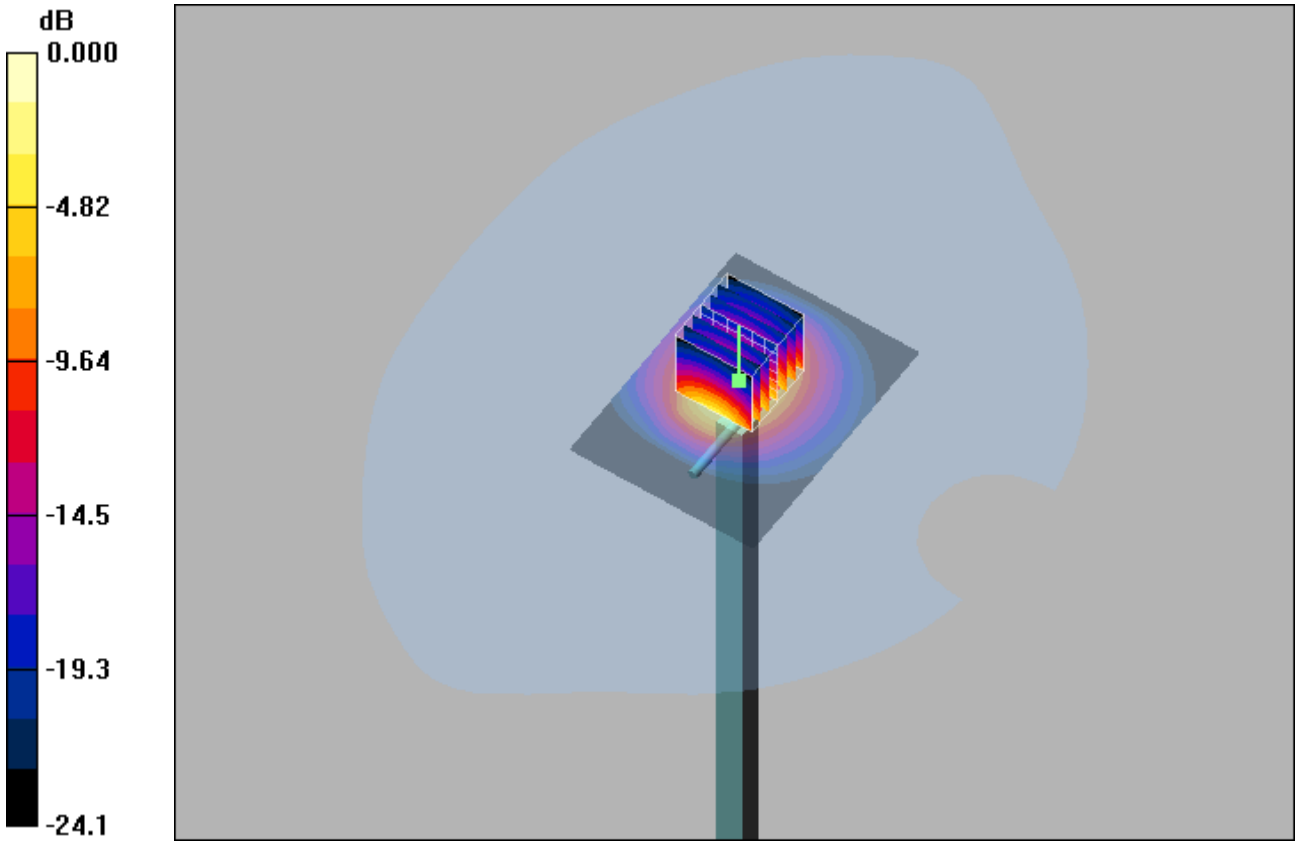

0 dB = 19.6mW/g

Test Laboratory: UnionTrust Date: 2024/1/20

System Check-D5GHz_H5250

DUT: Dipole D5GHzV2 SN:1280

Communication System: CW; Frequency: 5250 MHz;Duty Cycle: 1:1
Medium: H5G Medium parameters used: f = 5250 MHz; σ = 4.734 S/m; ε_r = 36.297; ρ = 1000 kg/m^3

DASY4 Configuration:
- Probe: EX3DV4 - SN7506; ConvF(5.48, 5.48, 5.48) @ 5250 MHz; Calibrated: 2023/6/29
- Sensor-Surface: 1.4mm (Mechanical Surface Detection)
- Electronics: DAE4 Sn913; Calibrated: 2023/6/26
- Phantom: SAM 1; Type: QD 000 P40 CB; Serial: TP/1378
- Postprocessing SW: SEMCAD, V1.8 Build 186

Pin=100mW/Area Scan (91x91x1): Interpolated grid: dx=1.000 mm, dy=1.000 mm
Maximum value of SAR (interpolated) = 19.8 W/kg

Pin=100mW/Zoom Scan (8x8x7)/Cube 0: Measurement grid: dx=4mm, dy=4mm, dz=1.4mm
Reference Value = 69.72 V/m; Power Drift = -0.17 dB
Peak SAR (extrapolated) = 34.9 W/kg
SAR(1 g) = 8.16 W/kg; SAR(10 g) = 2.3 W/kg
Smallest distance from peaks to all points 3 dB below = 7.2 mm
Ratio of SAR at M2 to SAR at M1 = 63.4%
Maximum value of SAR (measured) = 20.2 W/kg

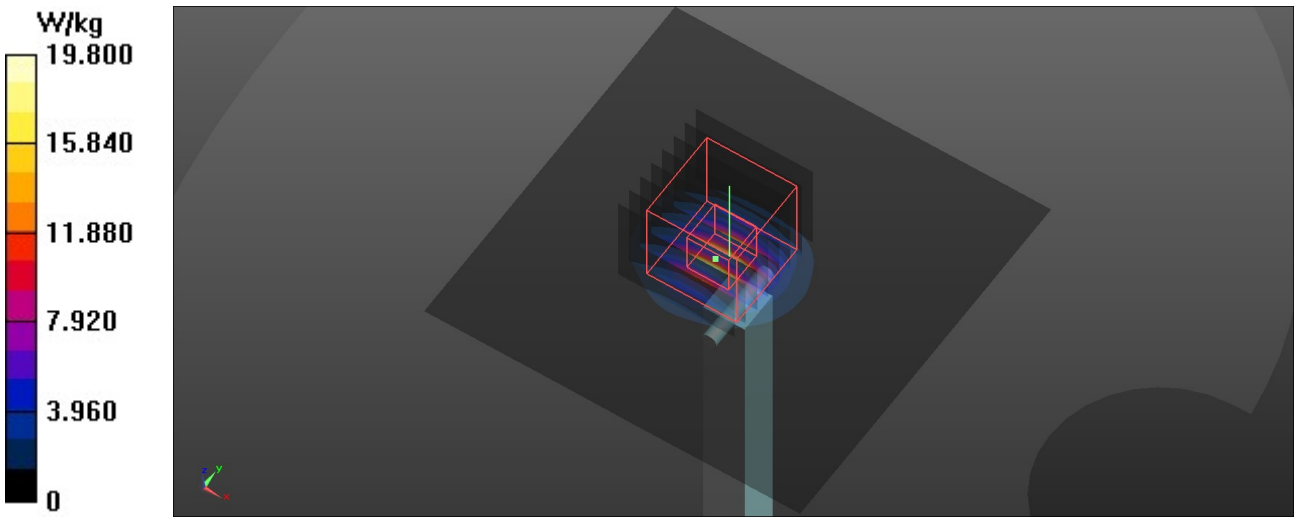

System Check-D5GHz_H5600

DUT: Dipole D5GHzV2 SN:1280

Communication System: CW; Frequency: 5600 MHz;Duty Cycle: 1:1
Medium: H5G Medium parameters used: f = 5600 MHz; σ = 5.092 S/m; ε_r = 35.786; ρ = 1000 kg/m^3

DASY4 Configuration:
- Probe: EX3DV4 - SN7506; ConvF(4.99, 4.99, 4.99) @ 5600 MHz; Calibrated: 2023/6/29
- Sensor-Surface: 1.4mm (Mechanical Surface Detection)
- Electronics: DAE4 Sn913; Calibrated: 2023/6/26
- Phantom: SAM 1; Type: QD 000 P40 CB; Serial: TP/1378
- Postprocessing SW: SEMCAD, V1.8 Build 186

Pin=100mW/Area Scan (91x91x1): Interpolated grid: dx=1.000 mm, dy=1.000 mm
Maximum value of SAR (interpolated) = 22.2 W/kg

Pin=100mW/Zoom Scan (8x8x7)/Cube 0: Measurement grid: dx=4mm, dy=4mm, dz=1.4mm
Reference Value = 74.33 V/m; Power Drift = 0.08 dB
Peak SAR (extrapolated) = 40.8 W/kg
SAR(1 g) = 8.97 W/kg; SAR(10 g) = 2.51 W/kg
Smallest distance from peaks to all points 3 dB below = 7.4 mm
Ratio of SAR at M2 to SAR at M1 = 61.5%
Maximum value of SAR (measured) = 21.9 W/kg

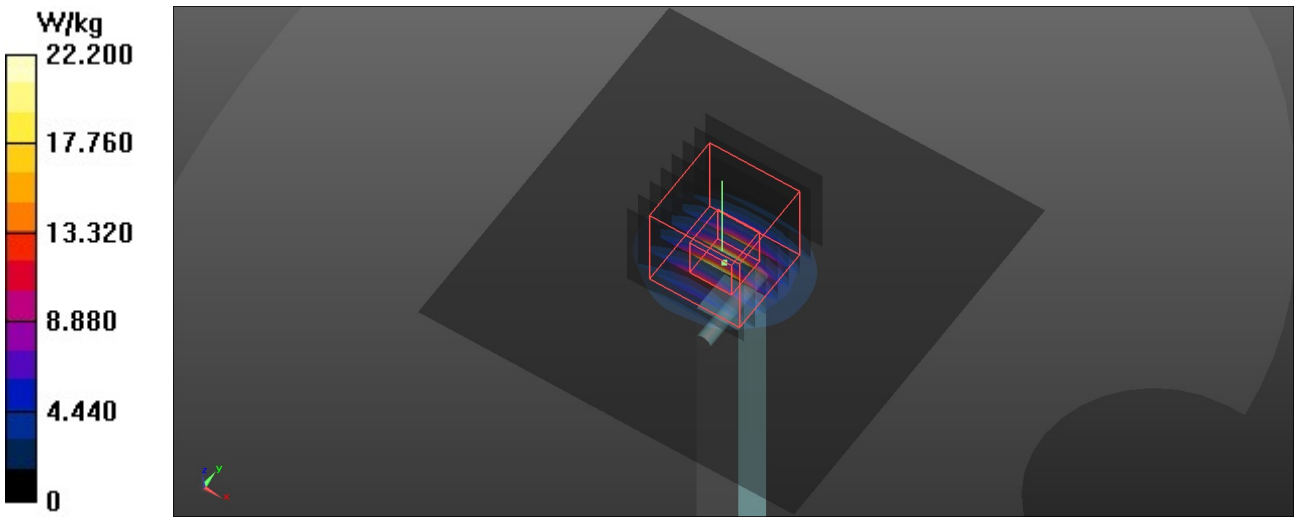

Test Laboratory: UnionTrust Date: 2024/1/20

System Check-D5GHz_H5800

DUT: Dipole D5GHzV2

Communication System: CW; Frequency: 5800 MHz;Duty Cycle: 1:1
Medium: H5G Medium parameters used: f = 5800 MHz; σ = 5.305 S/m; ε_r = 35.499; ρ = 1000 kg/m^3

DASY4 Configuration:
- Probe: EX3DV4 - SN7506; ConvF(4.95, 4.95, 4.95) @ 5800 MHz; Calibrated: 2023/6/29
- Sensor-Surface: 1.4mm (Mechanical Surface Detection)
- Electronics: DAE4 Sn913; Calibrated: 2023/6/26
- Phantom: SAM 1; Type: QD 000 P40 CB; Serial: TP/1378
- Postprocessing SW: SEMCAD, V1.8 Build 186

Pin=100mW/Area Scan (91x91x1): Interpolated grid: dx=1.000 mm, dy=1.000 mm
Maximum value of SAR (interpolated) = 20.7 W/kg
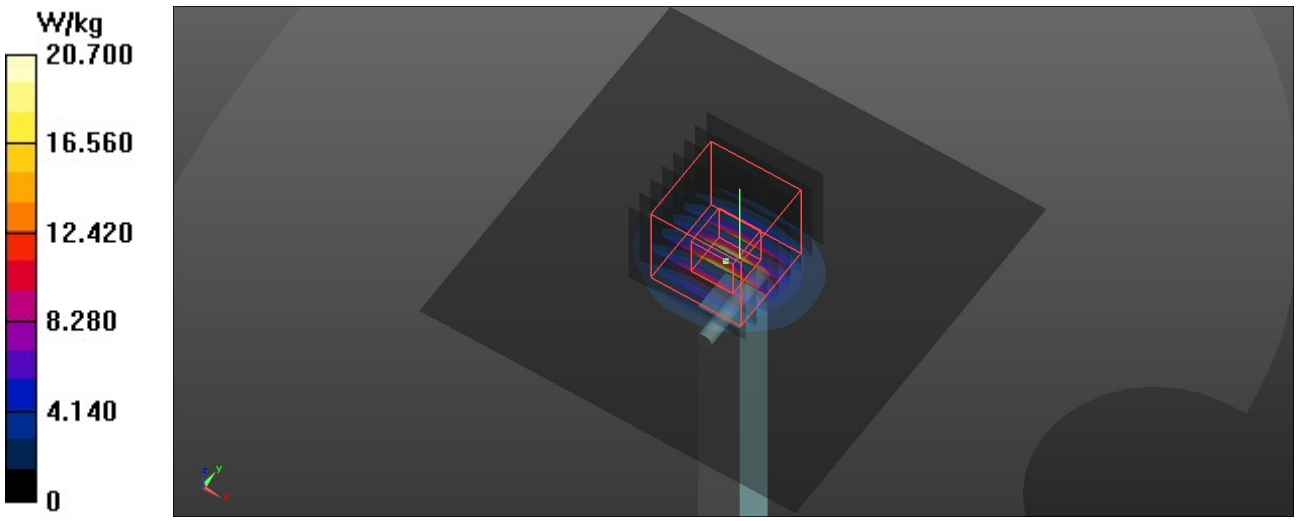
Pin=100mW/Zoom Scan (8x8x7)/Cube 0: Measurement grid: dx=4mm, dy=4mm, dz=1.4mm
Reference Value = 71.45 V/m; Power Drift = 0.00 dB
Peak SAR (extrapolated) = 40.3 W/kg
SAR(1 g) = 8.5 W/kg; SAR(10 g) = 2.41 W/kg
Smallest distance from peaks to all points 3 dB below = 7.4 mm
Ratio of SAR at M2 to SAR at M1 = 60%
Maximum value of SAR (measured) = 21.1 W/kg