ALL-POWER™

E2000 User Manual

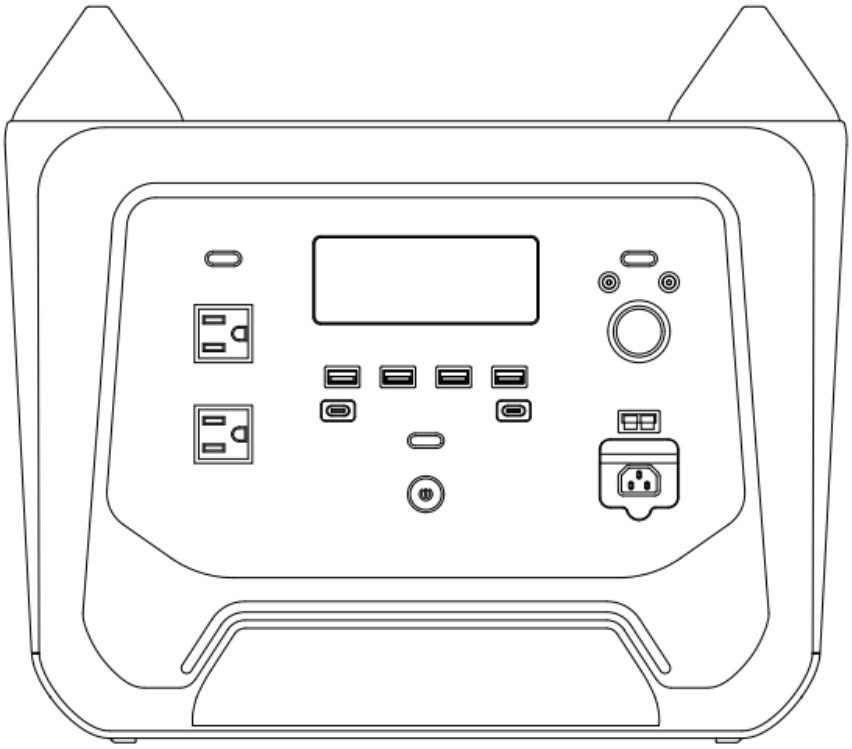

DISCLAIMER

Before use, please read the user's manual of this product to ensure that it is used correctly when fully understood. After reading, please keep the user manual in a safe place for future reference. Failure to operate this product correctly could cause you serious injury to yourself or others, or result in product damage and property loss. By using this product, you are deemed to have understood, recognized and accepted all the terms and contents of this document. Users undertake to be responsible for their own behavior and all the consequences arising therefrom. Product Manufacturer is not responsible for all losses caused by the user's failure to use the product in accordance with the User Manual.

In compliance with laws and regulations, the Company enjoys the final interpretation of this document and all related documents of this product. In case of updating, revision or termination without prior notice.

1. Parameter specifications

parameters

weight	约 18kg
sizes	392 x 280 x 345mm
capacity	2044Wh，51.1V

Output Specification

AC output（x2）	pure sine wave , total 2000W 120V~60Hz
USB-A quick charge（x4）	5~6V---3.0A6~9V---2A9~12V---1.5A Max power 18W per way
Type-C（x2）	5V---3.0A 9V---2A 12V---1.5A 20V---5A Max power 100W per way
Car Charger Output	12V/10A，Max power 120W
DC5521 exports（x2）	12V/3A
wireless charging	5---12V，0.9A---1.4A Max power 15W

* Car charger and DC5521 power sharing, maximum output 120W

Input Specification

AC Input Power	1600W

AC Input Voltage	120V/60Hz
Solar Charging Input	12-100V/25A(MAX),1200W Max

Battery Specifications

Cell materials	NCM
Cycle life	More than 80% remaining capacity after 1500 cycles
Type of protection	High-temperature protection, low-temperature protection, over-discharge protection, over-charging protection, overload protection, over-current protection, short-circuit protection

operating temperature

Best use of the ambient temperature	20℃-30℃
Discharging ambient temperature	-10℃-40℃
Charging ambient temperature	0℃-40℃
Storage ambient temperature	-20℃-45℃（20℃-30℃ best)

* The ability of this product to charge and discharge depends on the actual temperature of the battery pack.

2. Security guidelines

2.1 Use

1. It is strictly prohibited to place this product near a heat source, such as a fire source or a heating furnace, while it is working.
2.It is strictly prohibited to let this product come into contact with any liquid, do not immerse this product in water or get it wet. Do not use the product in the rain or wet environment.
3. Prohibit the use of this product in a strong static electricity or strong magnetic field

environment.
4. Do not disassemble or puncture the product with sharp objects in any way.
5. Prohibit short-circuiting the product with wires or other metal objects.
6. Do not use unofficial parts or accessories. If you need to replace them, please go to the official sales channels of JAC Power to check the relevant purchasing information.
7. When using this product, please strictly follow the operating environment temperature in this user manual. If the temperature is too high, the battery may catch fire or even explode; if the temperature is too low, the performance of the product will be seriously reduced, or even unable to meet the requirements of normal use.
8. Prohibit stacking other heavy objects on the product.
9. Prohibit the use of the process of forcibly blocking the fan, or let the product is not ventilated or dusty space.
10. Please avoid impact, fall, violent vibration, such as serious external impact, please immediately turn off the power to stop using. Please fix it well during transportation to avoid vibration and impact.
11. If the product is accidentally dropped into water during use, please place it in a safe open area and keep it away from the product until it is completely dry. The dried product should not be used again and should be disposed of properly in accordance with section 2.2 of this document. If the product catches fire, use fire extinguishing equipment in the following recommended order: water or water spray, sand, fire blanket, dry powder, carbon dioxide fire extinguisher.
12. If there is dirt on the interface of this product, please wipe it off with a dry cloth.
13. Please place the product carefully to prevent the product from tipping over and causing damage. If the product falls over and is seriously damaged, turn off the power immediately, place the battery in an open area away from combustible materials and people, and dispose of it in accordance with local laws and regulations.
14. Please store the product in a place where children and pets cannot touch it.
15. Store the product in a dry and ventilated place.
16. In humid environments (seashore waterfront and other environments) it is recommended that equipped with moisture-proof bag to use, avoid soaking in water soak, if you find that the product internal water, shall not be used again / power on, please do a good job of anti-electricity measures before touching the product, please immediately static in the safety of the waterproof open area, and immediately contact JAC Power customer service to deal with.
17.This product is not recommended to be used for personal safety related medical emergency equipment power supply, including but not limited to medical grade ventilator (hospital version CPAP: continuous positive airway pressure), artificial lungs (ECMO, Extracorporeal Membrane Oxygenation), etc. In addition, the product is not recommended to be used for medical emergency equipment power supply. Oxygenation), etc. In addition, home version CPAP can be used in a home environment and can be used normally without constant professional monitoring. Please follow medical advice and consult the manufacturer for restrictions on the use of the equipment, and if it is used for general medical equipment, be sure to keep an eye on the status of the power supply to ensure that it does not run out of power.
18. Power supply products inevitably generate magnetic fields during use, and these electromagnetic fields may affect the normal operation of implanted medical devices,

such as pacemakers, cochlear implants, hearing aids, defibrillators, etc. If you use these nedical devices, please follow your do ctor's instructions and consult the manufacturer for restrictions on the use of the device. If such medical devices are used, consult their nanufacturers for restriction s on the use of the devices in question to ensure that this product operates at a sufficiently safe distance from implanted medical devices (such as pacemakers, cochlear implants, hearing aids, defibrilators, etc.).

19.The output Power of a single AC Portcannot exceed 1800 W

20.This equipment complies with FCC radiation exposure limits set forth for an uncont rolled environment. This equipment should be installed and operated with minimum d istance 20cm between the radiator & your body.

2.2 Disposal

1.When conditions permit,be sure to completely dischargethe batteries of this product before placing it in the designated battery recycling bin. This prod uct contains batteries,which are hazardous chemicals and are strictly prohibited from being disposed of in
regular garbage bins. For details, please followlocallaws and regulations on battery recycling and disposal.

2.Ifthe batterycannot be completely discharged due to the produdt's own fault,please do not dispose of the battery directly in the battery recycling bin, but contadt a professional battery recycling company for further processing.

3.After over-discharging, the battery will not be able to start, please dispose of it as discarde d.

3. Beginner's guide

3.1 Product Appearance Introduction

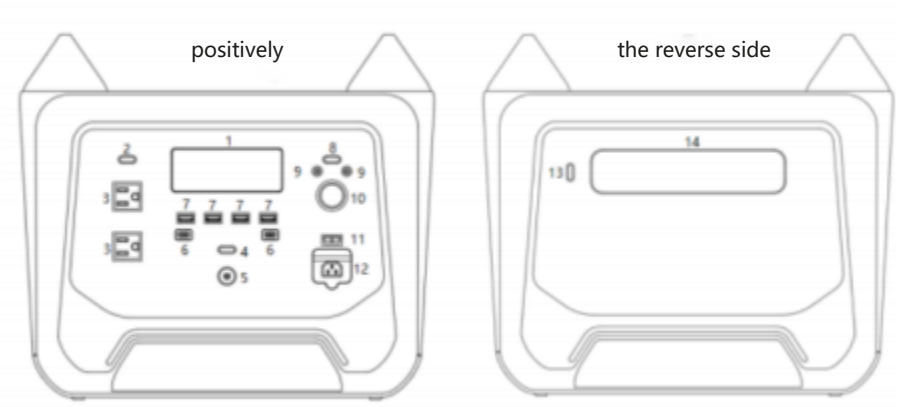

1 display screen	6 USB-C output port	11 Solar Chargin9 Port
2 AC Output Switch	7 USB-A fast charging output port	12 Mains AC charging port
3 AC Output Port	8 DC Power OutPut Switch	13 Ughtswtch
4 USB Power Output Switch	9 5521 outPutPort	14 LED lighting
5 Maln power on/of button	10 Car Charger Output Port	

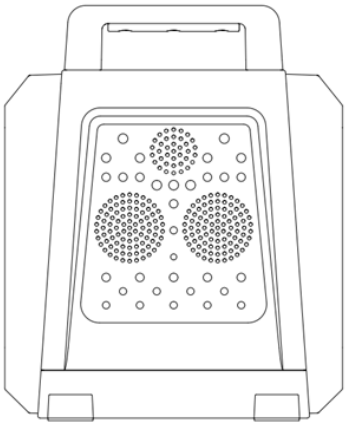

Ventilation and cooling holes

3.2 Introduction to Display Icons

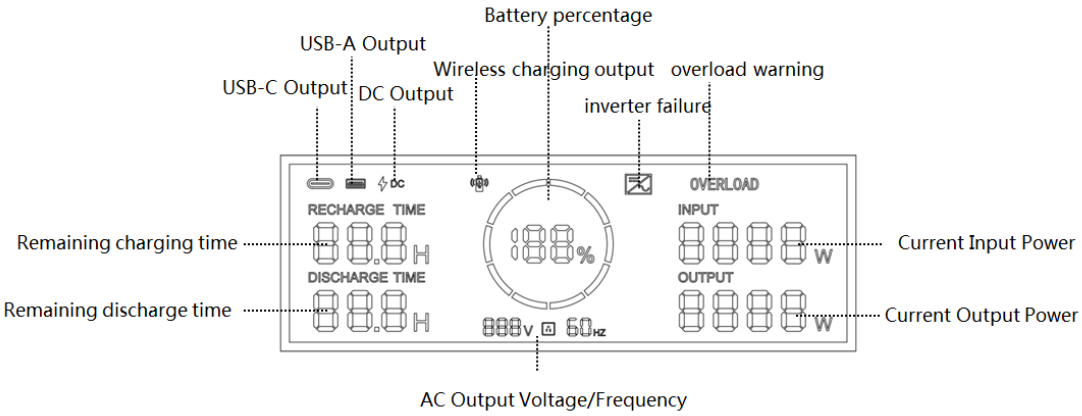

3.3 Product use

Press and hold to turn on

Long press to turn off

Power on, power off and display illumination

Long press the main power switch and hear "beep " to turn on the machine, the display is lit up after the machine is turned on. When this product lasts for 1minutes without any operation, the product enters the dormant state and the display will automatically go out. When there is a load change or operation of the product, the display will light up automatically. To turn the display on or off, press the main power switch briefly.

Press and hold the main power switch and hear"beep " , the product will turn off. The default standby time of this product is 2 hours. If the other output power switch is not turned on and the product is not connected to any load, the product will automatically turn off after 2hours, (Attached table, voice control "Close hibernation" t o extend the auto shutdown duration to 24 hours.)

Using the USB output

After ensuring that the main power switch is on, press the USB power output switch briefly to use the USB output port. Short press the USB power output switch again to turn it off.

Short press the USB power output switch

Using the DC power output

With the main power switch on, short press the DC power output switch to turn on the

DC output port. Short press the DC power output switch again to turn it off.

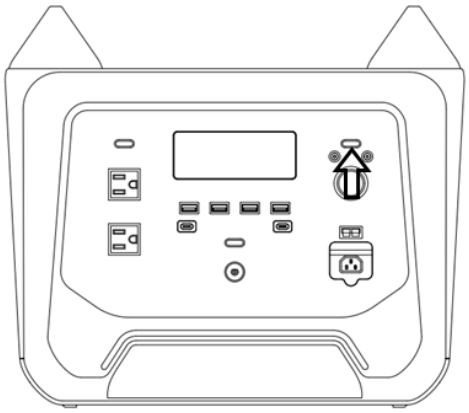

Short press on the DC power output switch

Using the AC Output

After ensuring that the main power switch is on, press the AC power output switch briefly to turn on the AC output port. Short press the AC power output switch again to turn it off.

Short press the AC power output switch

Use wireless charging output

After making sure the main power switch is on, short press the USB power output switch to turn on the wireless charging function. Place the device that can accept the wireless charging function in the wireless charging area to charge. Short press the USB power output switch again to turn it off.

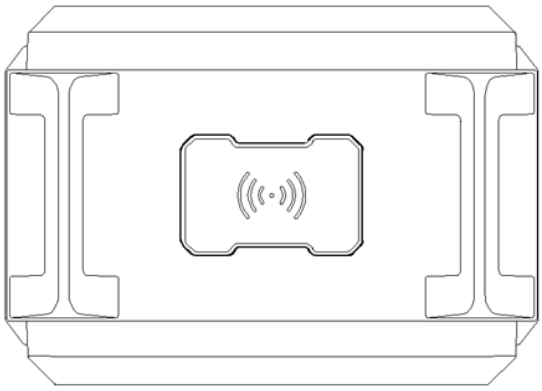

Wireless charging area

3.4 AC charging

After turning the power on, connect the plug of the charging cable to the wall outlet and the other end to the AC input port of the power supply. The device automatically enters the charging state, the display shows the current charging power and the remaining charging time, and when the battery SOC reaches 100%, charging automatically stops.

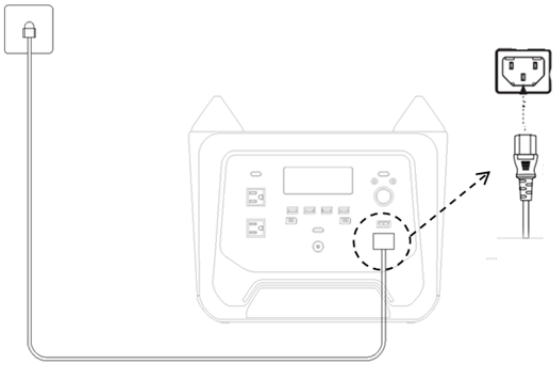

3.5 Solar charging

Users can charge this product by connecting solar panels in series as shown.

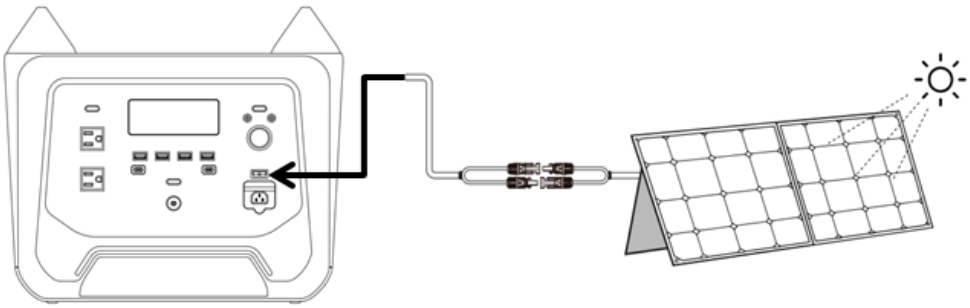

* When using the solar panel to charge this product, please make sure your solar panel symbols the following conditions: Open circuit voltage range: 12V-100V Maximum inpu t current 25A Maximum input power: 1200W.

4. Frequently Asked Questions

1. What type of battery does the product use?

The product uses high quality lithium-ion batteries.

2. What devices can the product AC output port take?

The product's AC output port has a high power rating and maximum power to power most household devices. We recommend checking the power of your devices before use to ensure that the combined power of all loaded devices does not exceed the rated power.

3. How do I know how long the product will power up?

The product's display will show the remaining battery life, which can be estimated for devices that generally use stable power.

4. How can I tell when the product is charging?

When the product is charging, the display will show the remaining charging time and the current input power. 5.

5. How do I clean the product?

Please use a dry, soft, clean cloth or paper towel to wipe the product. 6.

6. How do I store the product?

When storing the product, please turn off the power switch of the product first, and then store it in a dry, ventilated place with room temperature environment. Do not place the product near a water source. For long term storage, it is recommended that the battery be discharged to 30% and then recharged to 60% every three months to extend the life of the product.

7. Can this product be taken on an airplane?

No.

5、 Fault display and processing

Abnormality Icon Contents	Exception Type	Abnormality recovery method
icon display	inverter failure	Please contact after-sales
OVERLOAD icon display	AC output overload	Remove the overpowered device and reboot the machine to restore it

If an alarm prompt appears during the use of this product and the alarm icon does not disappear after restarting the machine, please stop using it immediately (do not try to charge or discharge it).

If none of the above information solves your problem, please contact customer service for advice.

6. Package contents

E2000 Portable Power Station

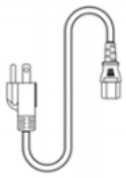

AC charging cable

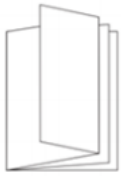

User manual and warranty card

7. How to maintain and care

1. It is recommended to use or store the product in an environment of 20℃ to 30℃, away from water, heat sources and other metal objects.
2. For long term storage, please charge and discharge the product every 3 months (first discharge the product to 30%, then recharge it to 60%).
3. For safety reasons, please do not store the product for a long period of time in an environment higher than 45°C or lower than -10°C. 4.
4. In order to prolong the service life of the battery, it is recommended to use the product in an environment of 20℃ to 30℃.
5. If the battery level is less than 1% after use, please charge it to 60% before storage. If the product is left unused for a long period of time with a severely low battery, it will cause irreversible damage to the battery and shorten the service life of the product. 6.
6. If the product is seriously low on power and has been idle for too long, the product will enter deep sleep mode and will need to be recharged before it can be used again.

Please take attention that changes or modification not expressly approved by the party responsible for compliance could void the user's authority to operate the equipment.

This device complies with Part 15 of the FCC Rules. Operation is subject to the following two conditions:

(1) This device may not cause harmful interference, and

(2) This device must accept any interference received, including interference that may cause undesired operation.

E2000 energy storage power voice control

Chinese command	English command	Chinese broadcast	English broadcast
切换英语 切换英文 switch English		正在为您切换英语	HI,I'm JUDY（JUDY改为JUDY）,May i help you
	switch Chinese 切换中文	switching Chinese for you	我是小智，有什么事可以随时吩咐
你好小智 小智小智	hi, JUDY JUDY,JUDY	我在	I'm here.
打开灯光 开灯	Turn on Light	正在为您打开灯光	Light Opening
		当前灯光已打开	Light Opened
关闭灯光 关灯	Turn off Light	正在为您关闭灯光	Light Closing
		当前灯光已关闭	Light Closed
调整灯光 切换灯光	Adjudt Luminance Switching light	正在为您调整灯光	Luminance Adjusting
调高亮度 调亮亮度 增加亮度	Turn up Luminance/Brightness Increase Luminance/	正在为您调整灯光	Luminance Adjusting
		当前灯光已最亮	Maximum Luminance Now
调低亮度 调暗亮度 降低亮度	Turn down Luminance/Decrease Luminance/	正在为您调整灯光	Luminance Adjusting
		当前灯光已最低	Minimum Luminance Now
打开语音	Turn on /Open Voice	正在打开语音	Voice Opening
关闭语音	Turn off / Close Voice	正在关闭语音	Voice Closing
增大音量 音量加大 调大音量 调高音量	Increase Volume	正在为您调整音量	Volume Adjusting
		当前已是最大音量	Maximum Volume Now
调小音量 音量减小 减小音量 降低音量	Decrease Volume	正在为您调整音量	VolumeAdjusting
		当前已是最小音量	Minimum Volume Now
最大音量 音量最大	Maximum Volume	音量已调整为最大	Maximum Volume
最小音量 音量最小	Minimum Volume	音量已调整为最小	Minimum Volume
打开呼救	Call for Help	正在为您打开紧急呼救功能	Emergency Call Opening
关闭呼救	Stop Calling for Help	正在关闭紧急呼救	Emergency Call Closing
打开交流输出	Open AC Output	正在为您打开交流输出功能	AC Output Opening
关闭交流输出	Close AC Output	正在为您关闭交流输出功能	AC Output Closing
打开直流输出	Open DC Output	正在为您打开直流输出功能	DC Output Opening
关闭直流输出	Close DC Output	正在为您关闭直流输出功能	DC Output Closing
打开USB输出	Open USB Output	正在为您打开USB输出功能	USB Output Opening
关闭USB输出	Close USB Output	正在为您关闭USB输出功能	USB Output Closing
打开休眠 打开自动关机	Open hibernation	正在为您打开休眠功能	Hibernation Opening
关闭休眠 关闭自动关机	Close hibernation	正在为您关闭休眠功能	Hibernation Closing

触发条件		中文播报	英文播报
SOC 30%时		电量还剩余30%，请注意电量哦	Battery Thirty Percent . Attention!
SOC 20%时		电量剩余20%，请及时充电	Battery Twenty Percent. Recharge please!
SOC 10%时		电量剩余10%，请及时充电	Battery Ten Percent. Recharge please
SOC 1%时		电量剩余1%，即将关机	Battery Only one Percent ! Shut down Soon!
AC 负载大于 2000W 时		当前在过负载使用哦	Overload Now!
待机		我先休息，有事再叫我	goodbye