Infrared Sauna

Operating instruction

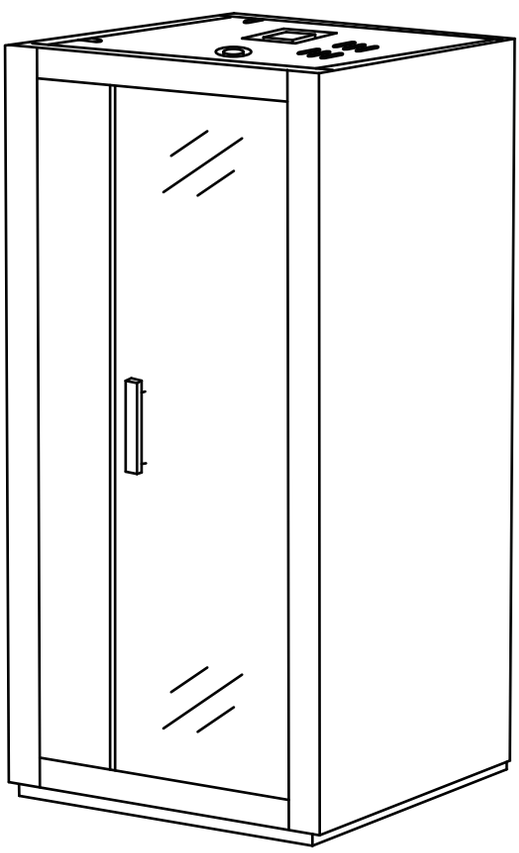

— Infrared makes life more healthy —

Due to our continued product improvement, product illustrated on this instruction manual may vary slightly from the actual product.

Contents

Warning 1

Important safety guides 2

Structure of infrared sauna 3

Installation process 4

Installation precautions 5

Control panel operation 7

Control box 8

Maintenance 9

Trouble shooting 10

Warning

1、The appliance is to be continuously attended;
2、The sauna room or cabin is to be inspected before setting the appliance to a standby mode for a delayed start.
3、Cleaning with steam cleaners, high pressure cleaners and spraying water is not allowed.
4、it is recommended that the infrared cabin should not be used within 24 h after UV radiation exposure from artificial sources or sun-bathing;
5、individuals who may be at risk from hyperthermia, such as individuals suffering from cardiovascular disease, should seek medical advice before use of infrared warming cabins;
6、when persistent erythema (reddening of the skin lasting more than a day) and netlike colour changes persist after regular exposure to infrared radiation, exposure should not be repeated and medical advice should be sought to prevent development of erythema ab igne;
7、if you are a person with compromised heat pain sensation or under the influence of alcohol or tranquilizers you should not use infrared warming cabins.
8、a pilot lamp showing that the heater or infrared emitter is switched on is to be installed in the attendant's room.
9、This appliance is not intended for use by persons (including children) with reduced physical, sensory or mental capabilities, or lack of experience and knowledge, unless they have been given supervision or instruction concerning use of the appliance by a person responsible for their safety.
Children should be supervised to ensure that they do not play with the appliance.
10、If the supply cord is damaged, it must be replaced by the manufacturer, its service agent or similarly qualified persons in order to avoid a hazard.

Important safety guides

Please strictly follow safety precautions when using!

1. Children must be using the equipment under the care of an adult. For safety, do not play with it;
2. Do not insert objects such as fingers or sticks into the heating tube plate to prevent danger;
3. Never pour water to the equipment or the heating pipe (board);
4. Do not use or store flammable gas or liquid such as hair spray, oil paint, gasoline, etc near the equipment to avoid fire;
5. Do not place items inside or on top of the sauna;
6. Do not touch the power control panel and any electrical components with wet hands to prevent electric shock;
7. It is forbidden to use the equipment during thunderstorms to prevent electric shock;
8. Do not tilt the equipment, do not use sharp objects to strike;
9. Shut down the equipment for half an hour after 4 hours continuous working;
10. Do not operate the equipment in a long-term high temperature environment;
11. Use with caution after drinking alcohol;
12. Those who have hemophilia or are prone to bleeding should avoid using it;
13. Please consult your doctor before using if you are in period of disease and taking medicine;
14. Do not use after intense exercise, wait until the body temperature returns to normal before using;
15. If you feel any discomfort, please stop using immediately;
16. Mind your head when get in and out of the equipment;
17. Do not sleep inside the equipment when it is working;
18. Do not use any bath products in the sauna;
19. To avoid burns, do not touch the heating element;
20. WARNING:Covering the heater or infrared emitter causes fire risk!
21. If you have any questions, please call the supplier.

Structure of infrared sauna

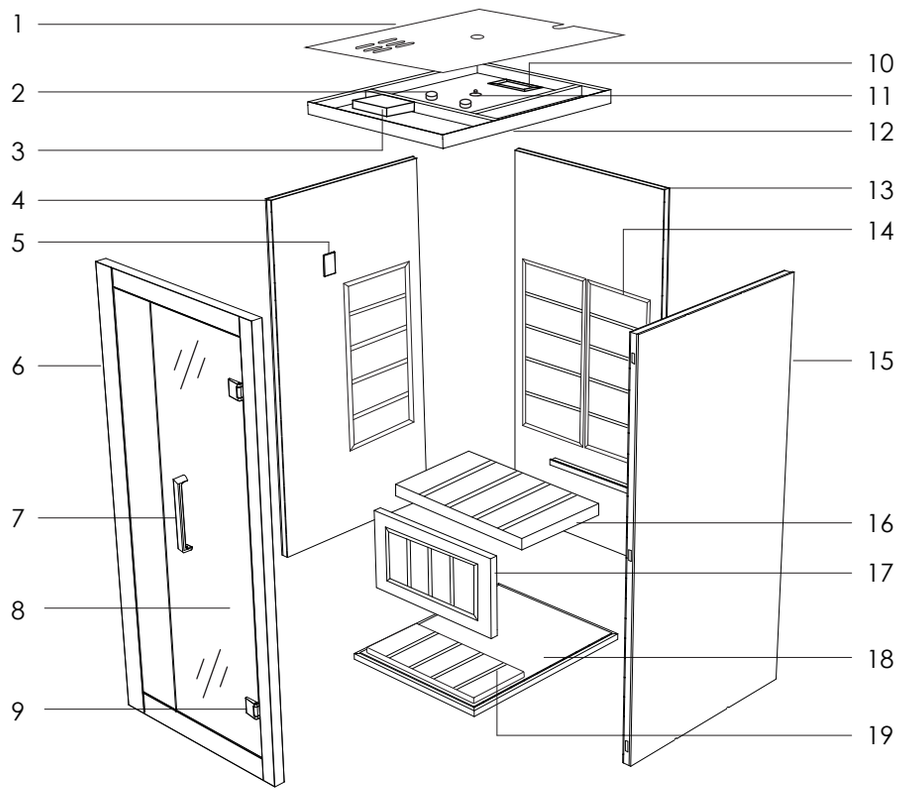

1 Duster cover	6 Front board	11 Temperature sensor	16 Bench
2 Speaker	7 Handle	12 Top board	17 Bench front board
3 Control box	8 Door glass	13 Back board	18 Bottom board
4 Left board	9 Hinge	14 Heater frame	19 Foot rest board
5 Control panel	10 Ventilation	15 Right board	

Attention: 1.The minimum distance between the top of an infrared emitter and the ceiling of the cabinis 100 mm;
2.The minimum distance between the bottom of an infrared emitter and the floor of the cabin is 40 mm, unless this distance is determined by the construction of the intrared emitter;
3.The minimum horizontal distance between an infrared emitter and any combustible material of the cabin is 5 mm, unless these distances are determined by the construction of the infrared emitter;
4.The minimum distance between adjacent infrared emitters is 5 mm.

Installation process

1

Bottom board

2

Back board

3

Left board

4

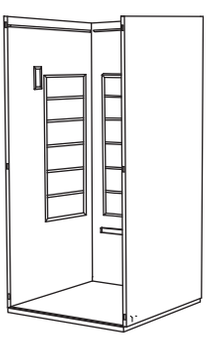

Right board

5

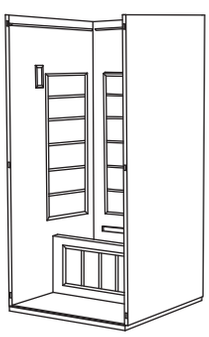

Bench front board

6

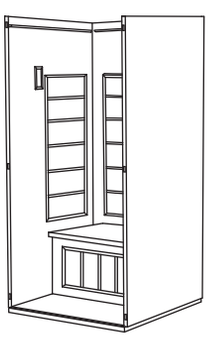

Bench

7

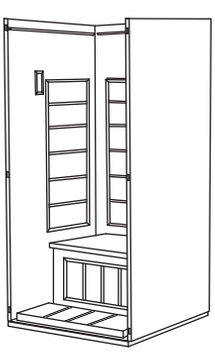

Foot rest board

8

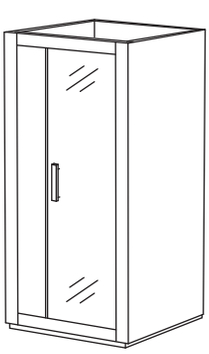

Front board

9

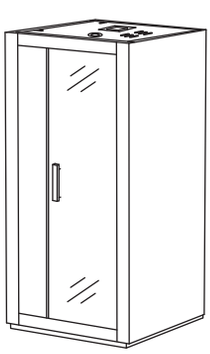

Top board

* The structure may vary from different models.Due to our continued product improvement, product illustrated on this instruction manual may vary slightly from the actual product.

Installation precautions

Large plate assembly

Suitable for processes 3 and 4
Installation method of the left
and right side panels

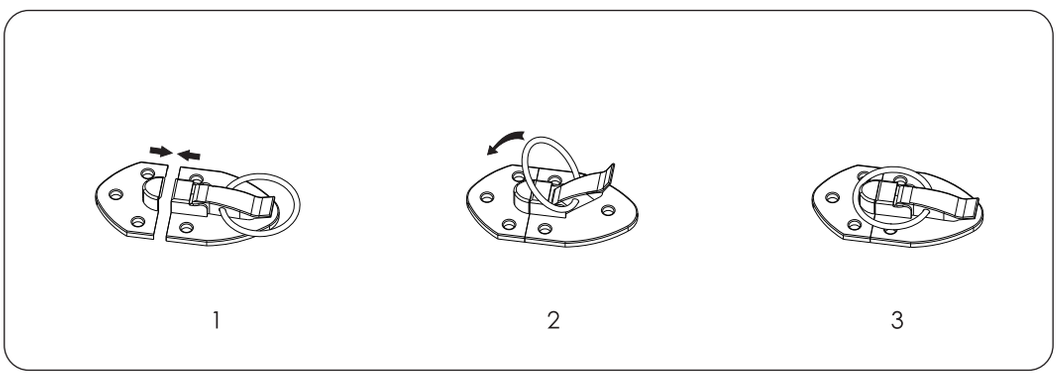

Suitable for process 8
Installation method of
the front board

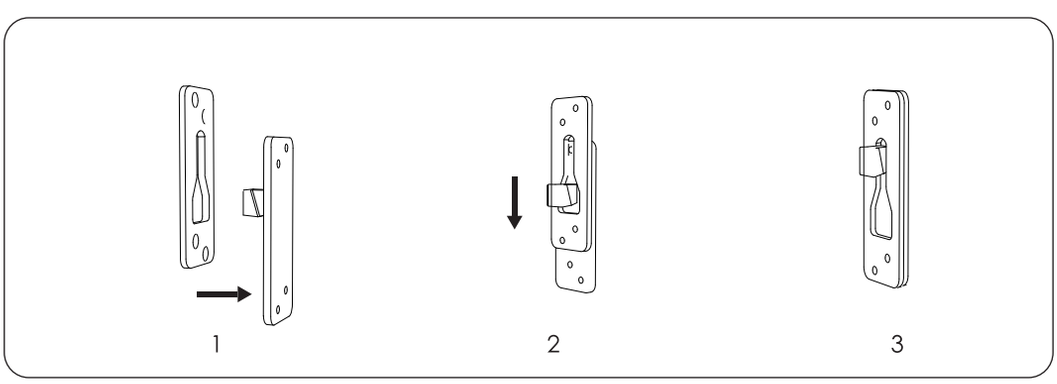

Installation precautions

Electrical connection

The product is connected to the main power supply through the cable.
the brown core of the cable is connected to the live wire of the main power supply,
the blue core is connected to the neutral wire of the main power supply,
and the yellow green core is connected to the ground wire of the main power supply

1

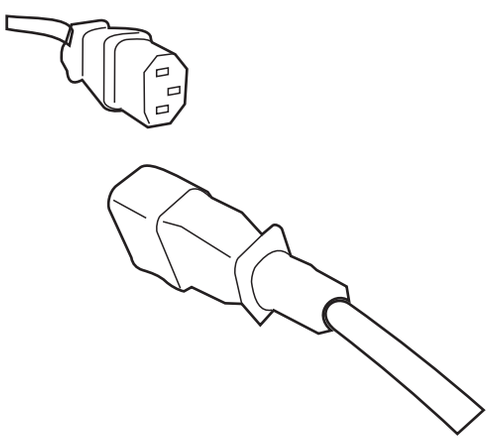

Conection cable

2

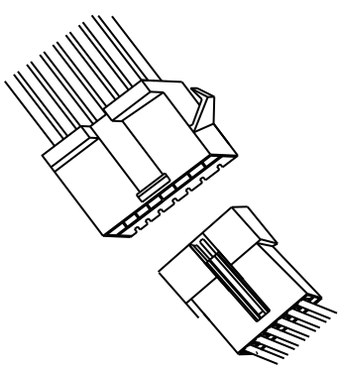

Connection plug

Control panel operation

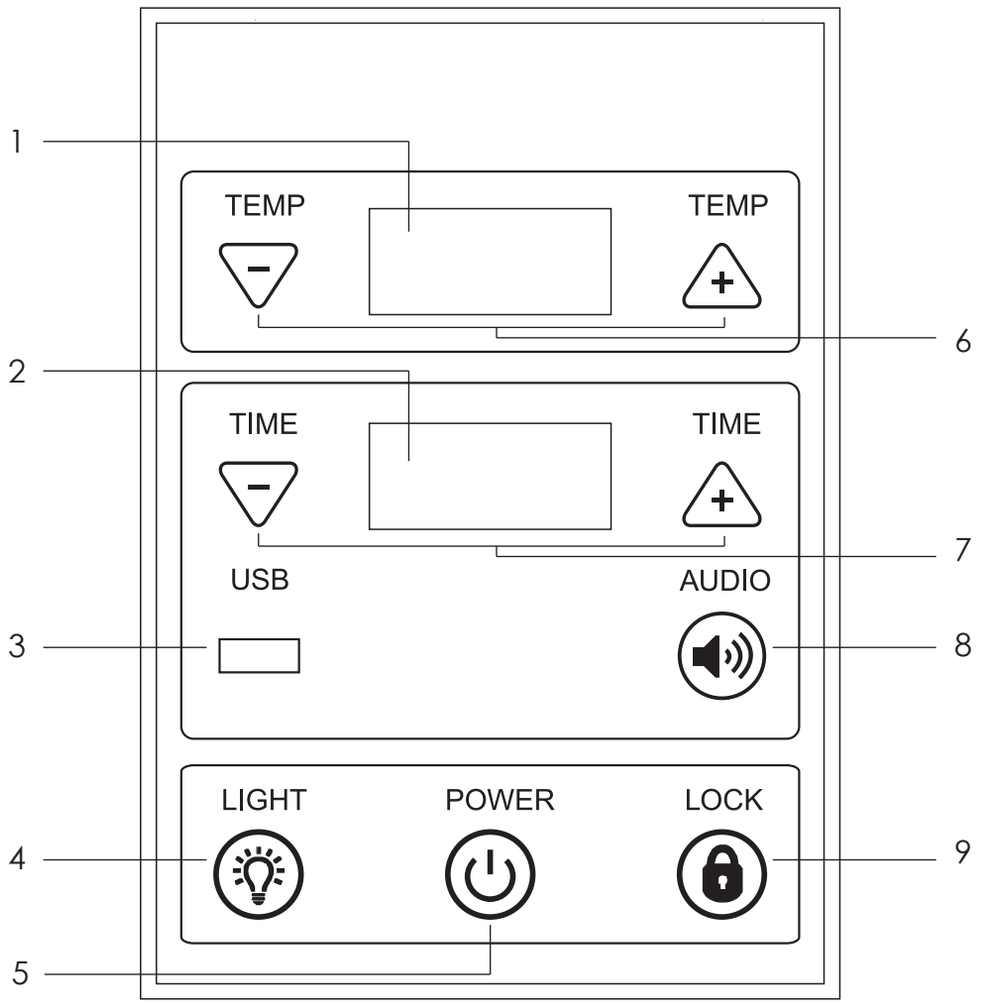

1 Temperate display screen
For temperate.

2 Timer display screen
For timer.

3 USB function
Touch this key to start USB function.

4 Light button
Touch the key to turn on/off the light.
See the next page for details.

5 Power button
Press and hold this button to switch on and off.

6 Temp control
After heater is turned on, press TEMP- and TEMP+ to adjust the heater temperature.
See the next page for details.

7 Time control
Touch the '+'and '-' buttons to set the timer from 5 to 60 minutes. Stepping is 5, when the countdown is to 5 minutes, it will beep 3 times.

8 Audio function
See the next page for details.

9 Button lock function
Long press LOCK button for 5S, indicator light is on, it means the button is locked. Long press this button again for 5S to unlock the button, indicator lamp is not light.

Control box

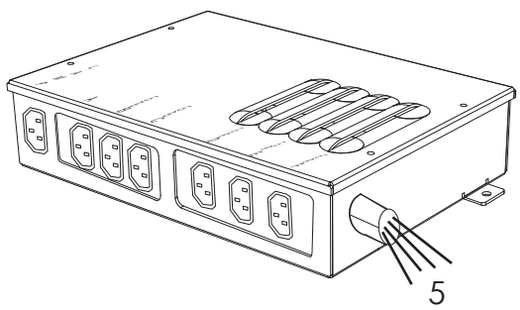

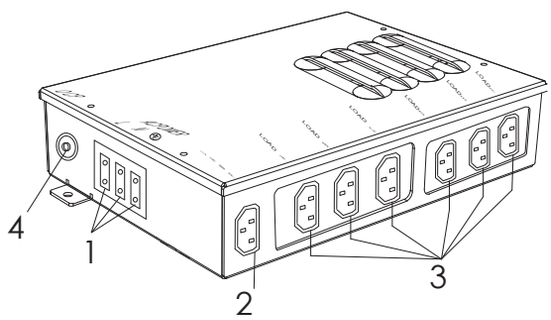

This control box is the control center of sauna room,it is installed on the top board,input/output connections as below.

1 Main power of sauna room.

2 Lamp power output cable

3 Heaters power output cable (LOAD A--LOAD F)

4 Fuse reset

5 12V output
Temperature sensor connection port
Control panel connecting
Antenna
USB output
Color lamp power output
Audio output

Maintance

Before using

1. Please be sure to follow the instruction manual before operations;
2. Prepare a towel on the seat bench to prevent sweat from dripping onto it.To avoid affecting the quality and beauty of wood.

After using

1. Please unplug the power plug in time;
2. Open the door to let the heat and humid water vapor dissipate and keep the sauna cabin dry.

Stain on wood

1. The outer cabin can be wiped with a wrung wet towel; The inner cabin can be wiped by small vacuum cleaner.
2. Do not use organic solvents to decontaminate, such as gasoline, alcohol, etc. wipe the sauna surface;
3. Do not use sharp objects in sauna cabin to prevent scratching woods.

Stain on glass

1. Wipe the glass with soft paper;
2. Stubborn stains can be wiped with a damp cloth, then dry with a dry cloth;
3. Do not scratch the surface with a sharp object to prevent scratching the glass.

Transportation and storage

1. Avoid water, snow and intense impact during the transportation;
2. Do not store it in a humid environment;
3. The northern climate is relatively dry, often wipe the product with a wrung wet towel;
4. The climate in the south is relatively humid and can be ventilated and dried frequently.

Trouble shooting

Number	Problems	Possible reasons	Countermeasure
1	Indicator light for powersupply not working	The connector is not connected properly	Check the connector or replace a new one
		No power supply input	Chick the circuity (especially weather there is power supply input)
		Indicator light is broken	Replace the circuity panel
2	Indicator light for function is not working	The heating indicator light is broken	Replace the relevant control panel
		The circuit board or components are broken	Replace the circuit board
		The temperature sensor is broken	Check if the connect is loosen and replace it
3	Infrared Heater not heating up	The heater is broken	Replace with a new one Of the same specifications
		The wire junction or the heater's wire is loosen	Check and make them tight
		The temperature sensor is broken	Check if junction of the temperature sensor is loosen and replace it
		The circuit board of the relay is not work	Replace the circuit board
4	Odor from the sauna	The circuit's problems	1) There is eyewinker around, remove it 2) Some heater's temperature over high,cut off the power supply,replace it. 3) Parts on the circuity is broken

Trouble shooting

Number	Problems	Possible reasons	Countermeasure
1	Poor display	Digital tube quality problem	Replace the display panel
		Digital tube driver IC is damaged	
2	Controller can't boot	CPU burned out	Replace a new CPU
		No power input	Check for power
		The controller's connection is loose	Reconnect the control computer cable
3	Temperature display is not normal	Temperature sensor damaged	Replace temperature sensor
4	Bluetooth is not paired properly	Check if other devices were paired	Disconnect the original paired device
		Check if the Bluetooth version is compatible. The system supports version 2.0 or 4.0.	Replace the matching version
		Bluetooth driver module is broken	Replace the four-in-one module
5	Radio without sound	Radio module is broken	Replace the four-in-one audio module
		Speaker cable is broken or the speaker is broken	Replace the wire or replace the speaker
		Motherboard amplifier is broken	Replace the motherboard
6	System alarm	The screen displays EO and alarms	Sensor disconnection
		The screen displays HH and alarms	Excessive temperature
		The screen displays E1 and alarms	Sensor short circuit
7	Stop heating after heating for a while	The system has overload, overcurrent protector action	First check if there is an open circuit, if no open circuit, restart current limit protector
		Temperature sensor partial overheating	Check why the partial area is overheated

FCC Warning

This device complies with part 15 of the FCC Rules. Operation is subject to the following two conditions: (1) This device may not cause harmful interference, and (2) this device must accept any interference received, including interference that may cause undesired operation.

Note: This equipment has been tested and found to comply with the limits for a Class B digital device, pursuant to part 15 of the FCC Rules. These limits are designed to provide reasonable protection against harmful interference in a residential installation. This equipment generates, uses and can radiate radio frequency energy and, if not installed and used in accordance with the instructions, may cause harmful interference to radio communications. However, there is no guarantee that interference will not occur in a particular installation. If this equipment does cause harmful interference to radio or television reception, which can be determined by turning the equipment off and on, the user is encouraged to try to correct the interference by one or more of the following measures:

—Reorient or relocate the receiving antenna.

—Increase the separation between the equipment and receiver.

—Connect the equipment into an outlet on a circuit different from that to which the receiver is connected.

—Consult the dealer or an experienced radio/TV technician for help.

Note: The Grantee is not responsible for any changes or modifications not expressly approved by the party responsible for compliance. such modifications could void the user's authority to operate the equipment.

The device has been evaluated to meet general RF exposure requirement.

To maintain compliance with FCC's RF exposure guidelines, the distance must be at least 20 cm between the radiator and your body, and fully supported by the operating and installation

Infrared Sauna

Operating instruction