it's electric

BROOKLYN 718

INSTALLATION GUIDE

Revision 12

TABLE OF CONTENTS

BEFORE YOU BEGIN 02
SITE PREPARATION 08
ON THE STREET 12
AT THE HOUSE 23
FINAL STEPS 31

BEFORE YOU BEGIN

Copyright and Trademark

This installation manual contains valuable information and is subject to copyright protection. All rights are reserved. The content, including text, images, diagrams, and illustrations, is the property of It's Electric Inc., and is protected by trademark and copyright laws.

No part of this manual may be reproduced, transmitted, or distributed in any form or by any means, electronic or mechanical, including photocopying, recording, or any information storage and retrieval system, without the prior written permission of It's Electric Inc.

The trademarks, logos, and trade names mentioned in this manual are the property of their respective owners. Their use does not imply endorsement or affiliation with It's Electric Inc. Any unauthorized use or reproduction of this manual or its contents may violate copyright and trademark laws, and may result in legal action. By proceeding with the installation and use of the product, you acknowledge and agree to respect the trademark and copyright ownership of It's Electric Inc.

Contact

It's Electric Inc.
Newlab- itselectric
Brooklyn Navy Yard, Building 128
19 Morris Ave
Brooklyn, NY 11205

https://itselectric.us

Support

support@itselectric.us

Model

Model Name: Brooklyn
Model Number: 718

Warranty

Warranty period covers one year (365 calendar days) beginning from the date of purchase. It's Electric Inc. will repair or replace, at its discretion, any defective parts or components of the product. This warranty covers manufacturing defects and malfunctions that arise under normal use and maintenance. Exclusions: The warranty does not cover damages resulting from improper installation, misuse, neglect, accidents, or unauthorized repairs or modifications. It also does not cover damages caused by natural disasters or events beyond our control.

Claiming Warranty Service: In the event of a warranty claim, please retain your proof of purchase and contact our customer service department at support@itselectric.us.

Limitations: This warranty is limited to the original purchaser of the product and is non-transferable. It does not cover any consequential or incidental damages arising from the use of the product.

Rights and Remedies: This warranty gives you specific legal rights, and you may also have other rights that vary from jurisdiction to jurisdiction. In case of any dispute or disagreement, the laws of Delaware shall apply.

Wide Area Network	3G GSM, 3G CDMA
Enclosure Rating	Type 3R per UL 50E
Safety Compliance	UL listed for USA ; complies with UL 2594, UL 2231-1, UL 2231-2, and NEC Article 625

Important Safety Instructions

WARNING – When using electric products, basic precautions should always be followed, including the following. This manual contains important instructions for Model 718.

Read all the instructions before using this product.

This device should be supervised when used around children.

Do not put fingers into the electric vehicle connector.

Do not use this product if the EV cable or flexible power cable is frayed, has broken insulation, or any other signs of damage.

Do not use this product if the enclosure or the EV connector is broken, cracked, open, or shows any other indication of damage

The ambient temperature range for the indoor or outdoor Post is (-25°C to 50°C, -13°F to 120°F).

The ambient temperature range for the indoor or outdoor Base/Home Unit is (-20°C to 50°C, -4°F to 120°F).

GROUNDING INSTRUCTIONS: This product must be connected to a grounded, metal, permanent wiring system, or an equipment-grounding conductor must be run with the circuit conductors and connected to the equipment grounding terminal or lead in the product.

SAVE THESE INSTRUCTIONS

The ambient temperature range for the indoor or outdoor base is

Tools Required

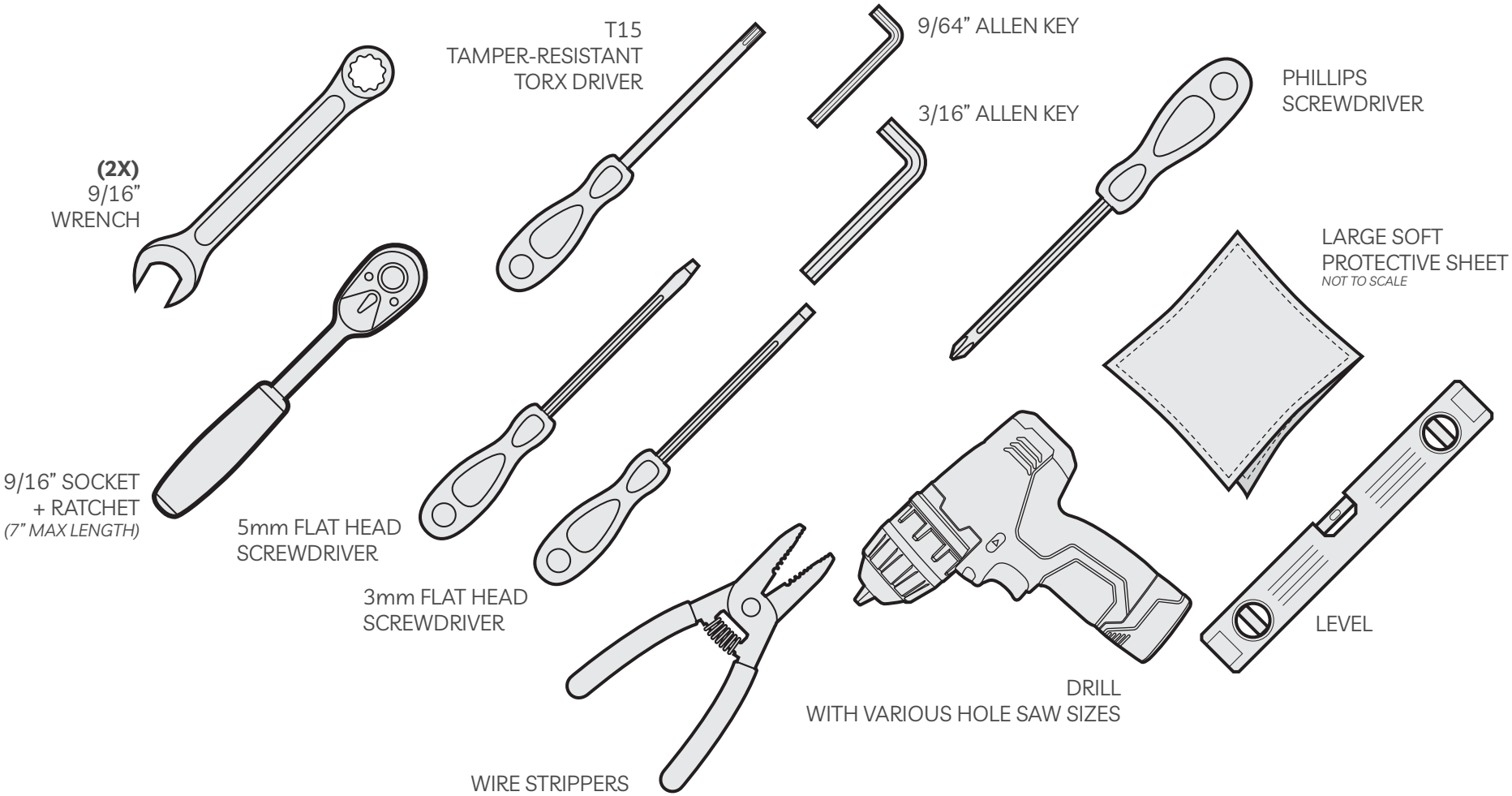

Parts List

POWER AND COMMUNICATIONS CABLES TO BE SUPPLIED BY INSTALLER.
SEE STEP 6 FOR DETAILS

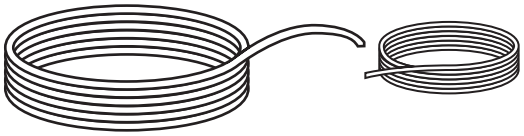

SKIRT QTY: 1

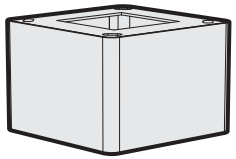

GROUND BOX QTY: 1

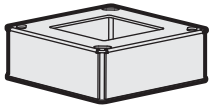

GASKET QTY: 1

MOUNTING BRACKET
WITH THREADED RODS
QTY: 1

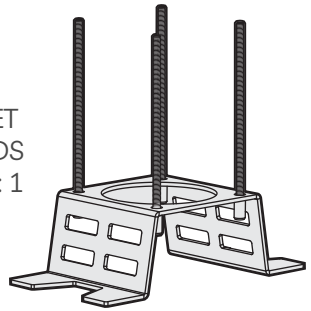

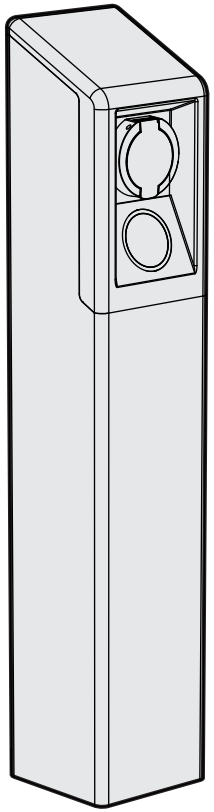

POST QTY: 1
43-1/2" H x 7" W x 7" D

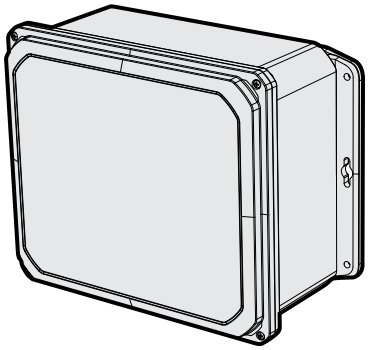

BASE/HOME UNIT QTY: 1
16-1/2" W x 13-1/4" H x 7" D

3/8"-16 NUT QTY: 16

3/8" FLAT WASHER QTY: 12

1/4" FLAT WASHER QTY: 1

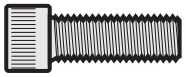

1/4"-28 X 3-16"
HEX SOCKET SCREW QTY: 1

CONTINUE TO
SITE
PREPARATION

SITE PREPARATION

Line voltage power and low voltage communications connections between the **Home Unit** and **Post** will be made under the supervision of a professional electrician licensed by the governing authority that has jurisdiction over the installation site. All line voltage power and low voltage communications connections are to be in accordance with or exceed all applicable local electrical and building codes. At a minimum, installer will provide line voltage power connection between the **Home Unit** and **Post** using 8AWG insulated copper cable.

1. Dig trenches for underground conduit runs per local code.

2. Lay conduit for the **Power and Communications Cables.**

Conduit diameter should be selected per local code.

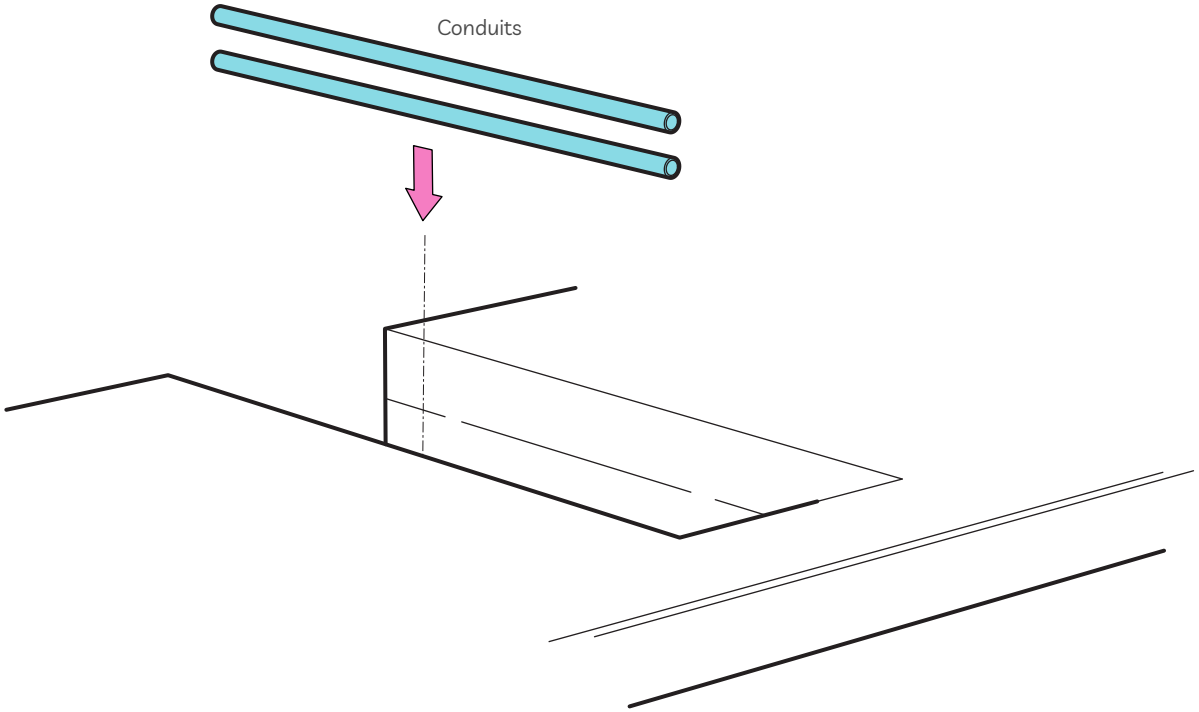

3

Insert **Rods** into **Mounting Bracket**.

Rods need to be inserted into **Mounting Bracket** until they bottom out.

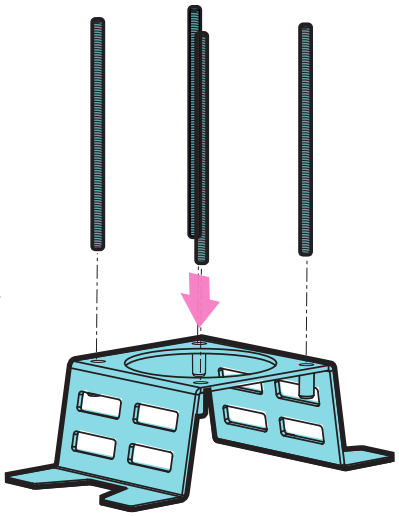

4

Insert and fixture **Mounting Bracket**.

Make sure top of **Mounting Bracket** is level with sidewalk.

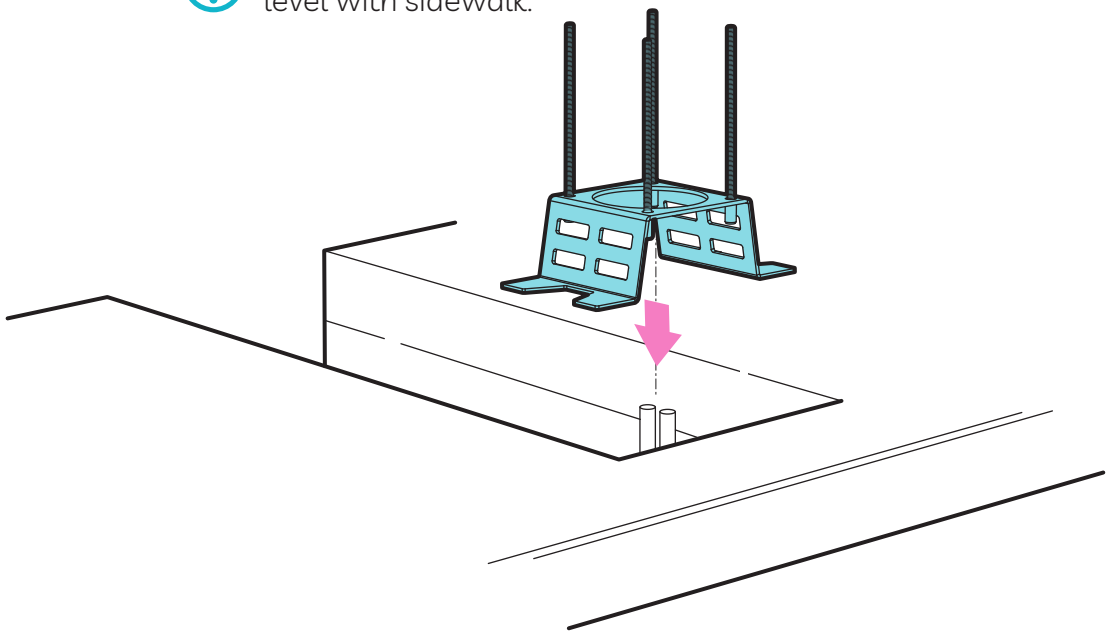

5

Fill opening with concrete as required by local code. Be sure to keep **Mounting Bracket** flush with surface of sidewalk.

Make sure top of **Mounting Bracket** is level with sidewalk.
Caution: Do not pour cement into rivets or onto **Rods**.
If **Rods** are not installed, plug the rivets before pouring concrete.

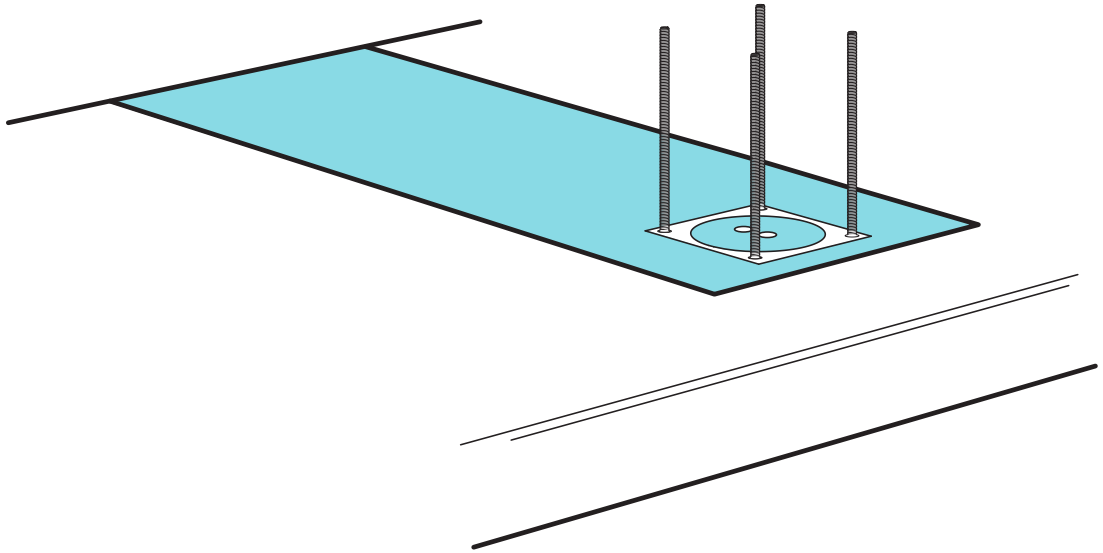

CONTINUE TO ON STREET INSTALLATION

ON THE STREET

6

Route the **Power** and **Communication Cables** through the conduit to the desired location of the **Home unit**. Make sure to leave 24" (2 ft) of cable outside.
The cable length should not exceed 150' (ft) between the Home Unit and Post.

Note: Do not attach any connectors to the **Communication Cables** at this point

Power cable

3 lines of 8 AWG Copper for L1, L2, and Gnd. Black, Red, and Green preferred, or as dictated by NEC.

Communication cable

1 cable of 18 AWG multiconductor, 11 conductor minimum
1 cable of 24 AWG 3x twisted pair with shielding (6 conductors)

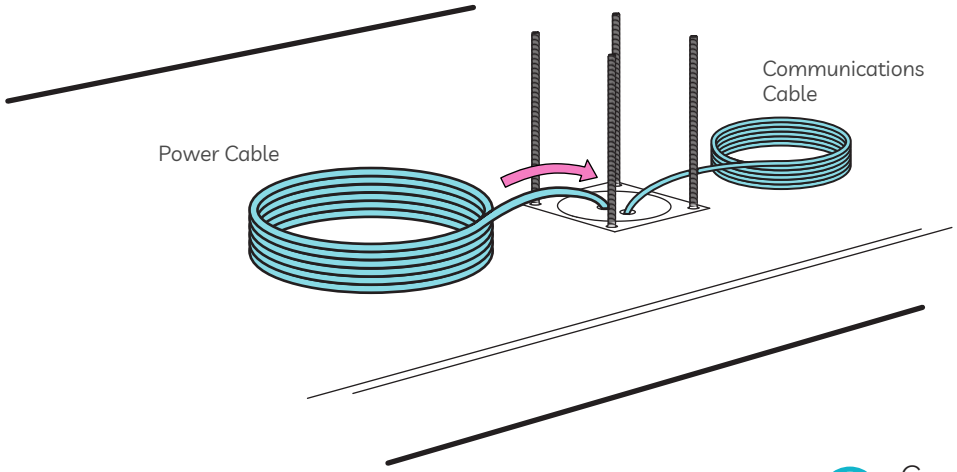

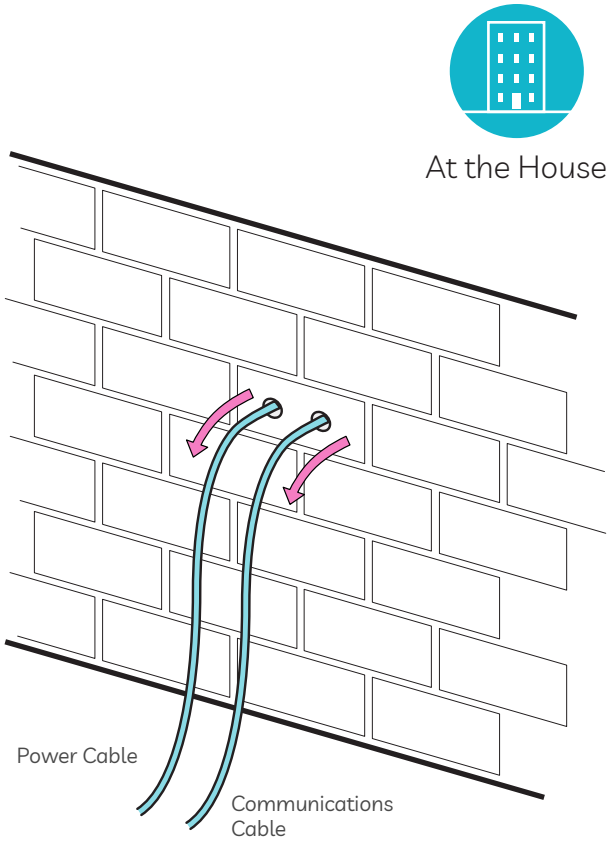

Conduit through exterior wall. Refer to architectural or civil engineering approval.

7

Begin **Post** assembly. First, attach the **Gasket** to the **Ground Box**. Second, place the **Ground Box** over the **(4) Threaded Rods**. Be sure to run the cables in the center of both components.

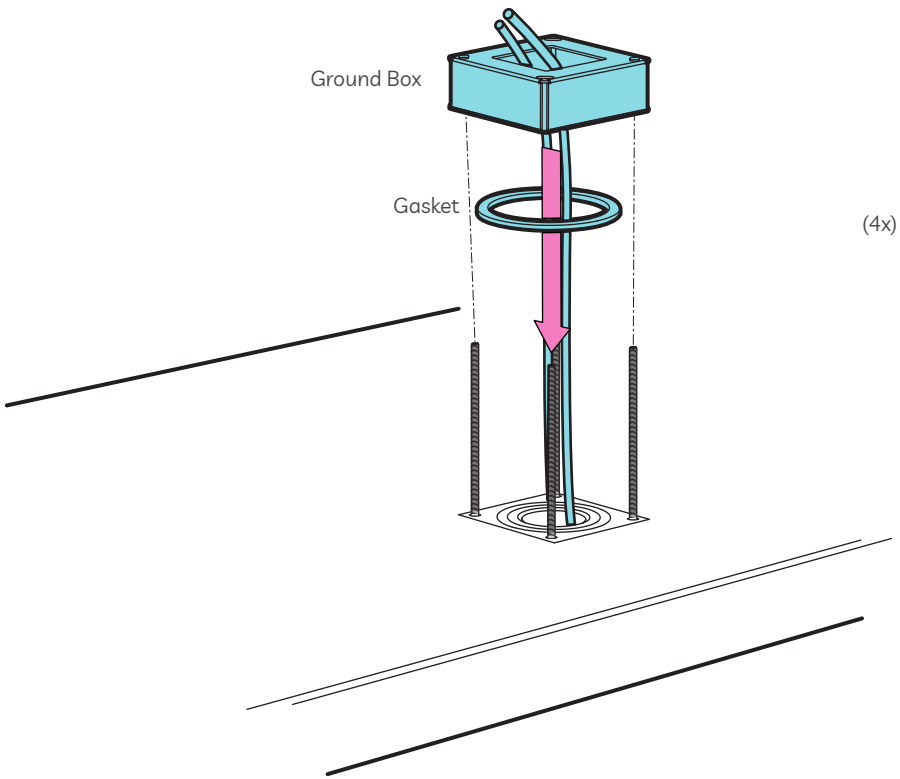

8

Install **Security Strap** onto front right **Rod**. Adjust **Ground Box** to be parallel to the curb. Secure **Ground Box** and **Security Strap** using the **(4) 3/8" Flat Washers | (4) 3/8" Nuts**.

Security Strap has two different hole sizes, slide the larger hole onto the **Rod**.

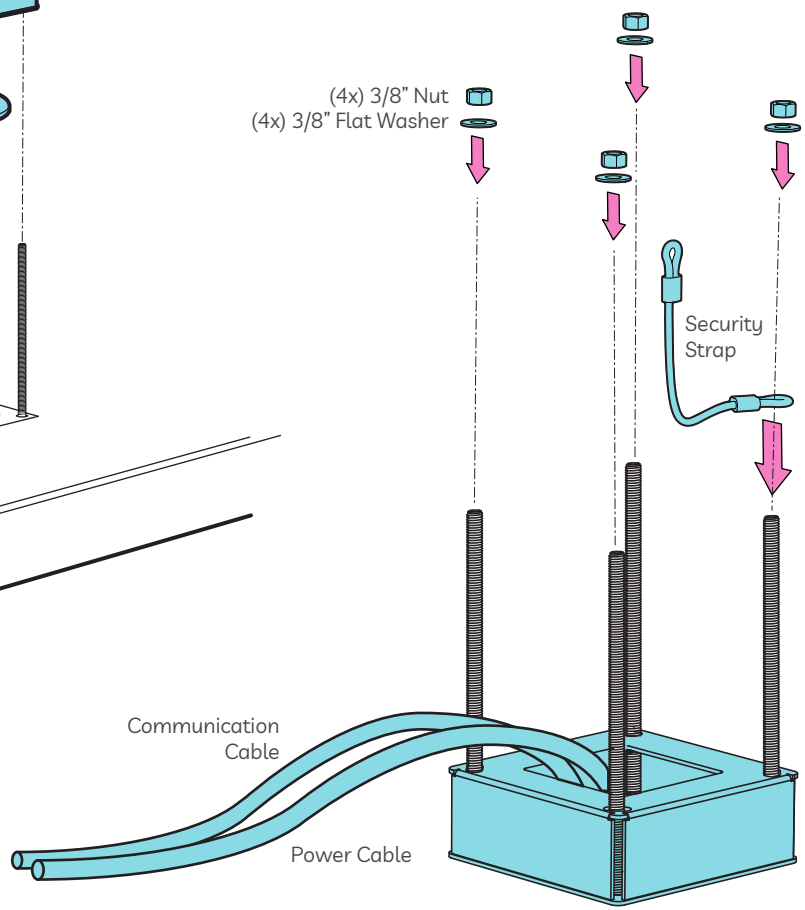

Make parallel to Curb.

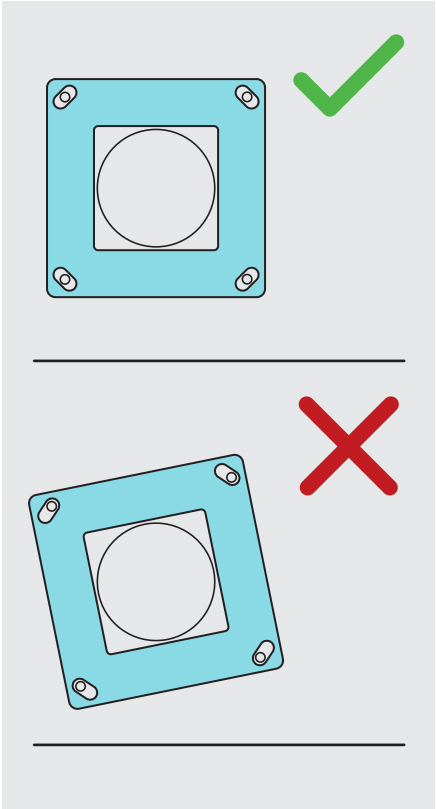

9

Per each **Rod**, thread **(2) 3/8" Nut** and **(1) 3/8" Flat Washer**. Top of washer should be 3" from the top of the **Ground Box**.

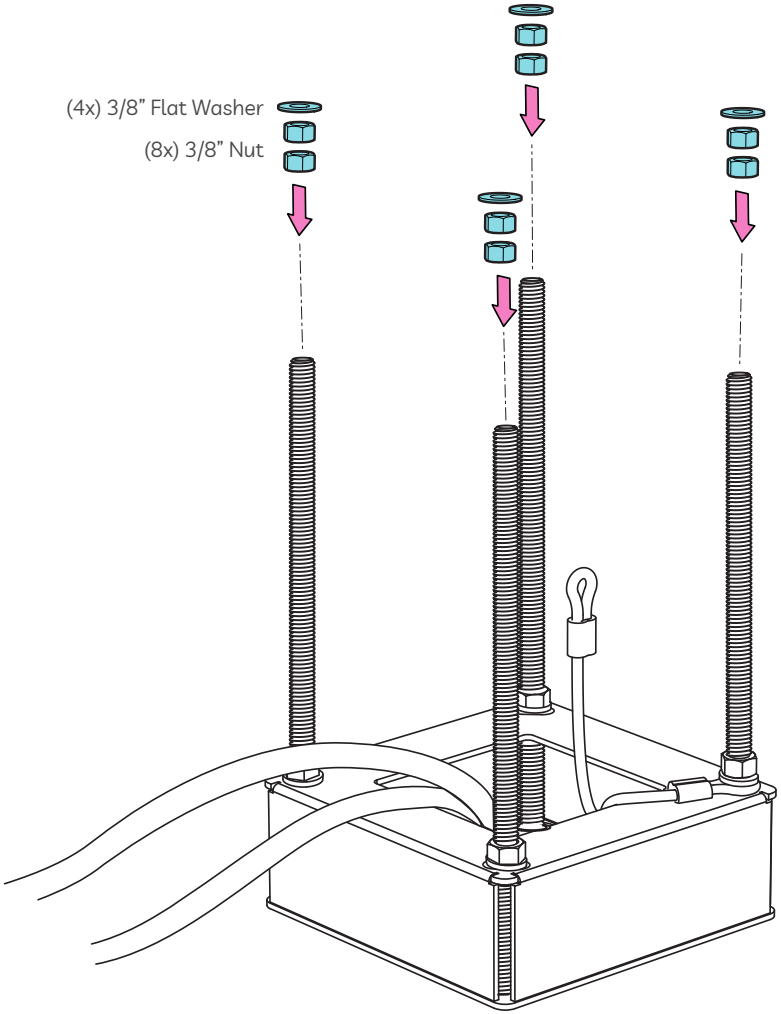

10

Align the **Skirt** to the **Threaded Rods**. Feed the cables through the center of the **Skirt**. The **Skirt** must be level before proceeding. If needed, adjust the **Nut(s)** to level.

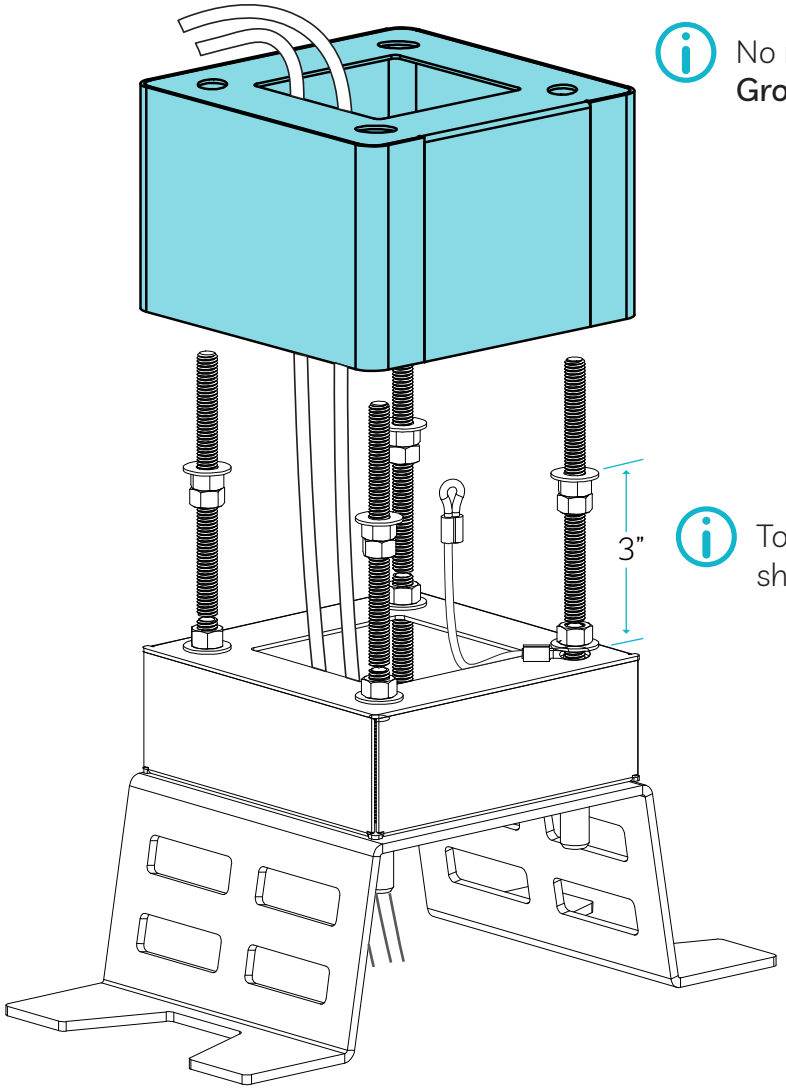

No more than 3/4" of the **Ground Box** should be exposed.

To level the **Skirt**, place upside down and adjust **Nut** height. When level, tighten the **Nuts** against each other until locked in place.

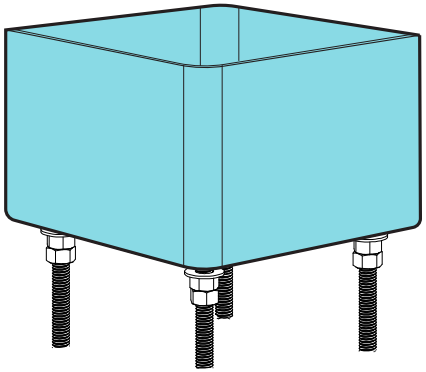

Top of **Washer** to top of **Ground Box** should be approx 3"

Make sure it is level.

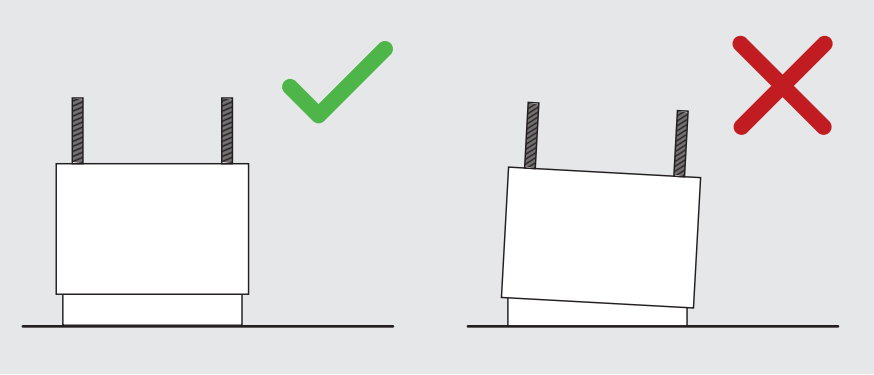

11

Lay the front side of the **Post** down onto a large soft protective sheet to prevent damage. Remove the six **(6) Rear Panel Screws**. Place these parts in a location to avoid loss or damage.

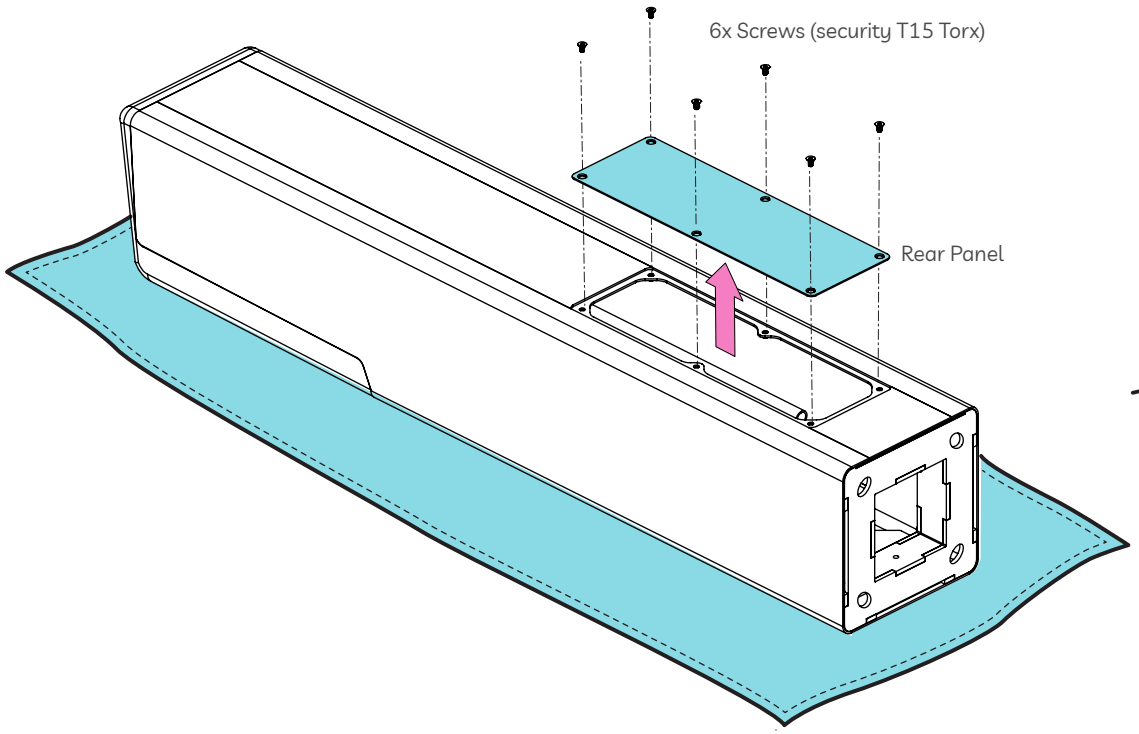

12

Align **Post** onto the the four **Threaded Rods**. Feed cables into bottom of the **Post**.

Make **Post** parallel to curb.

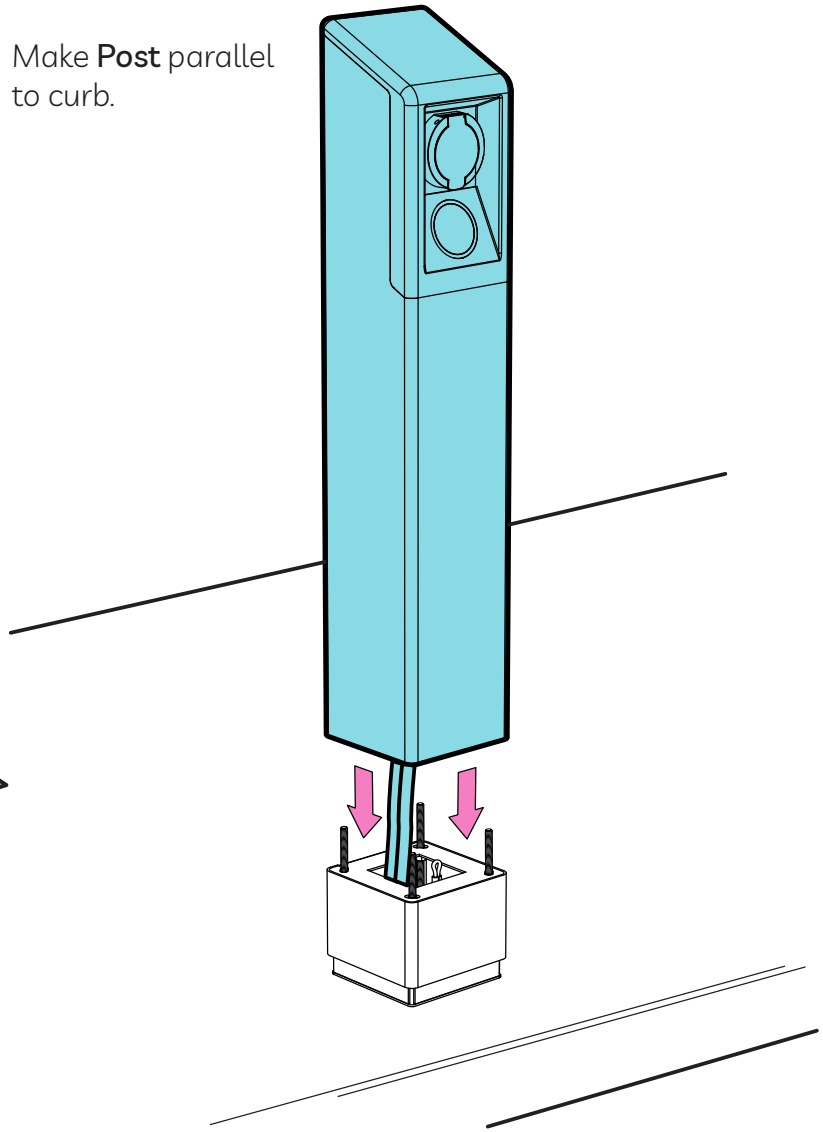

13 **Secure Post** and **Internal Bracket** by using **(4) 3/8" Flat Washers** and **(4) 3/8" Nuts**. One of each for each **Threaded Rod**.

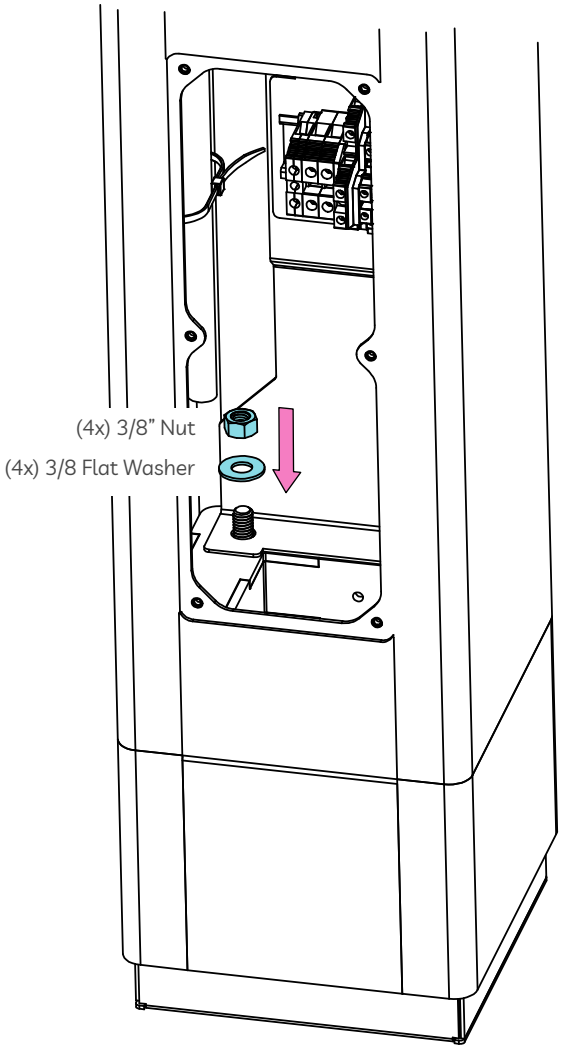

14 Secure **Security Strap** to **Post** with a **1/4" Flat Washer** and **1/4"-20 Screw**.

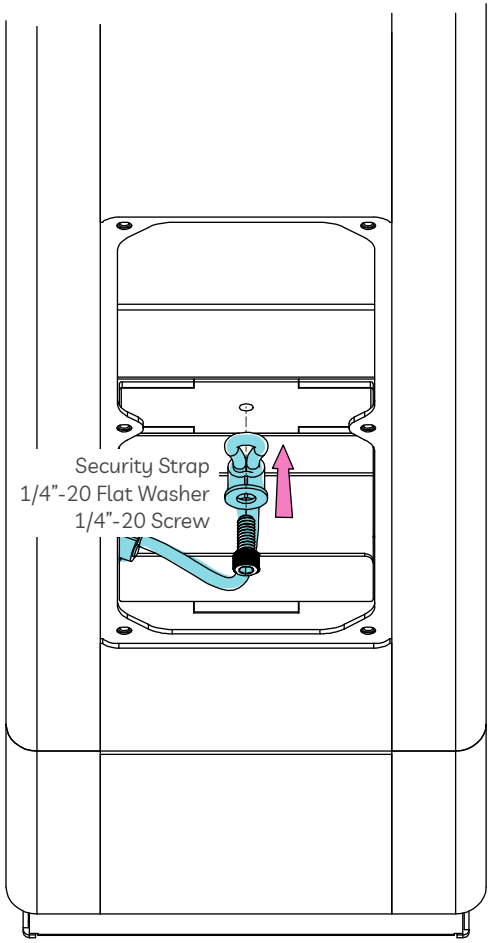

15 Post Unit Communication Connection

Attach the labeled connector from inside the **Post** to the **Communication Cables** per the diagram below. For electrician furnished cables, ensure wiring is terminated such that conductors go from labeled 1 to labeled 1, 2 to 2, etc. Note that labeled locations are mirrored between **Post** and **Home Unit** sides.

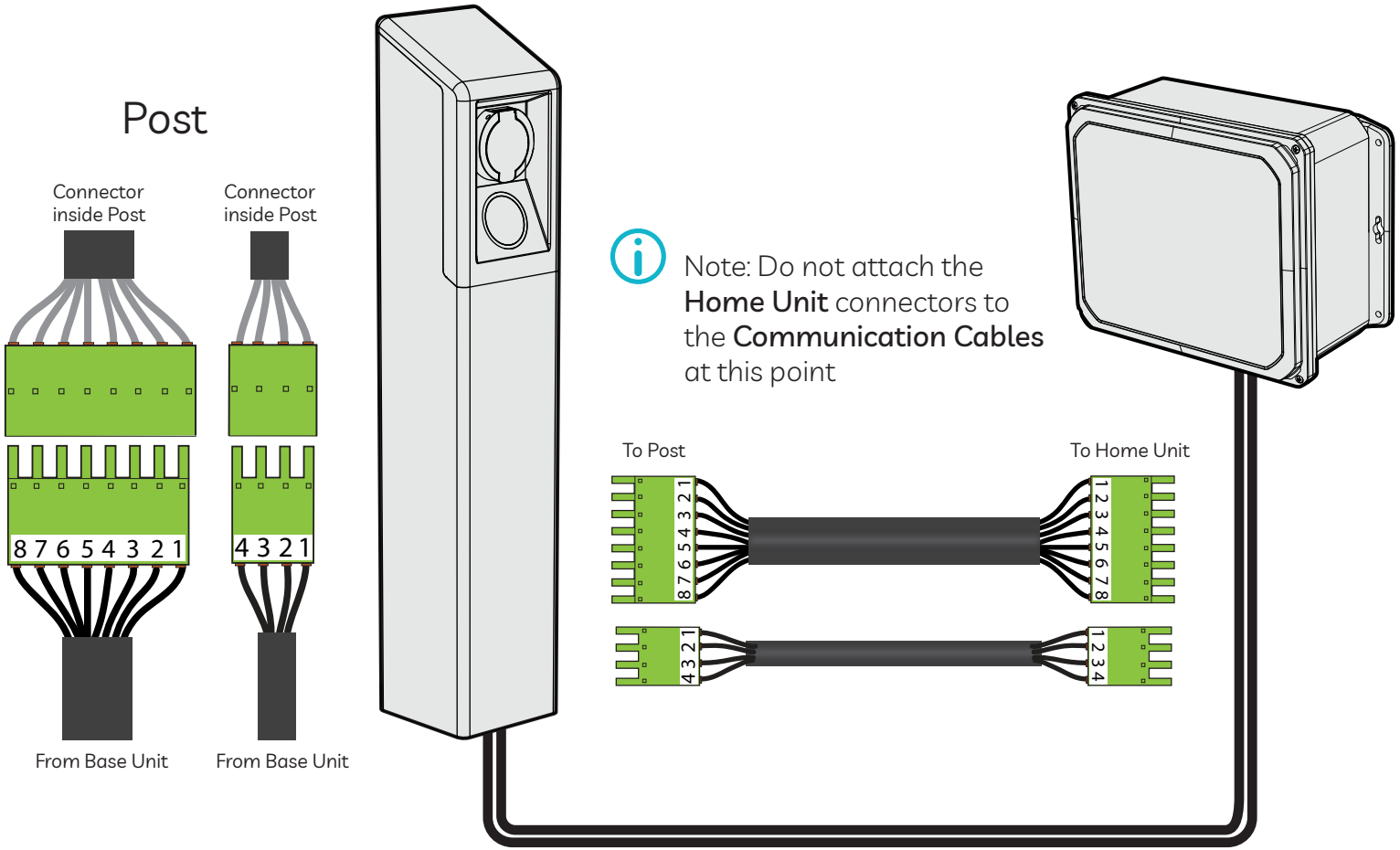

16

Connect the conductors in the conduit to the **Terminal Assembly** as per the diagram below.

Note: Remove **Terminal Assembly** if helpful. See Step 16a and 16b for instructions.
If not required, please proceed to Step 17.

Torque Spec, **Terminal Blocks**:

- **A** 0.8-1.0Nm (7.1-8.8in-lb)
- **B** 0.4-0.6Nm (3.5-5.3in-lb)

Note: Wire colors for **Communication Cable** are arbitrary.

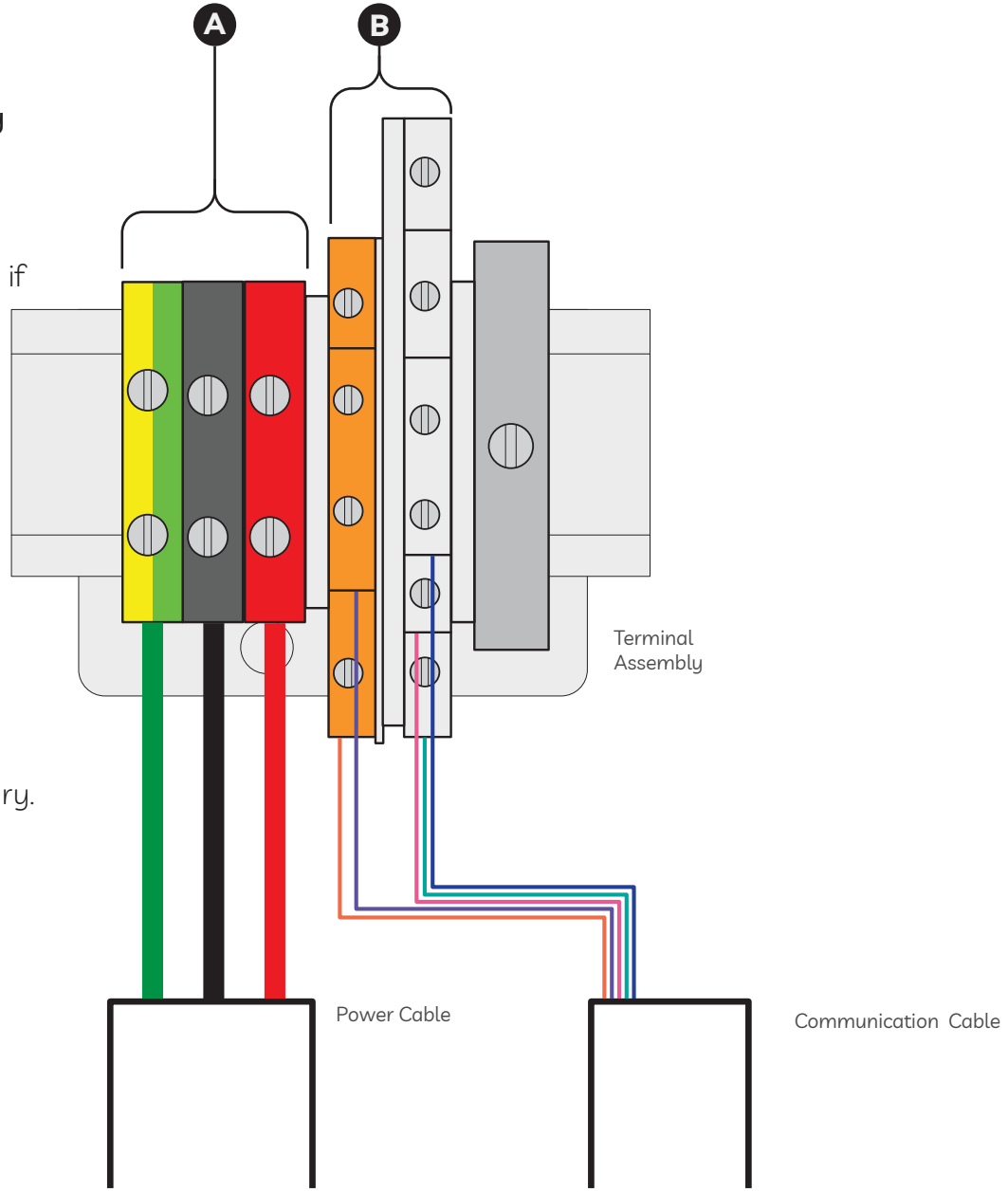

16a

On the **Terminal Assembly**, remove the (1) **Ground Screw.**

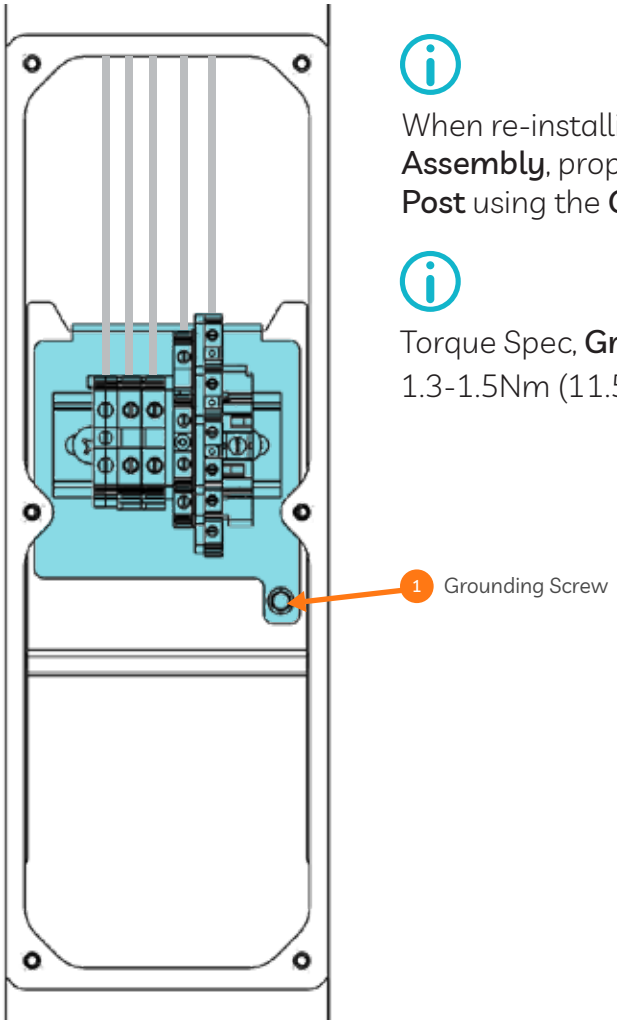

When re-installing **Terminal Assembly**, properly ground the **Post** using the **Ground Screw**.

Torque Spec, **Grounding Screw**: 1.3-1.5Nm (11.5-13.3in-lbs)

16b

Lift **Terminal Assembly** and remove.

Go back to Step 16 to connect **Terminal Assembly**, then reverse Steps 16b and 16a to re-install the **Terminal Assembly**.

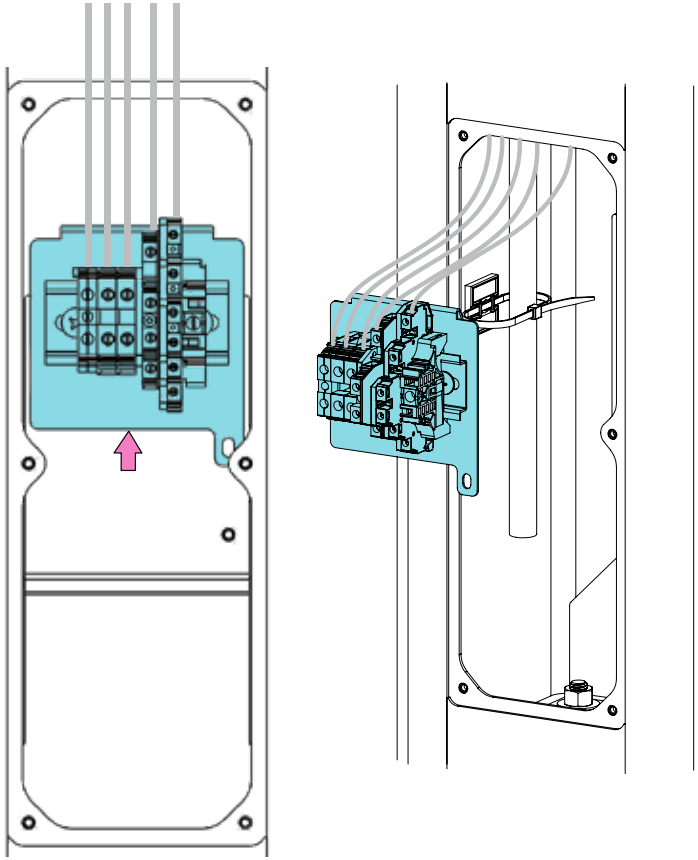

17 Attach the **Rear Panel** with the **(6) Screws**.

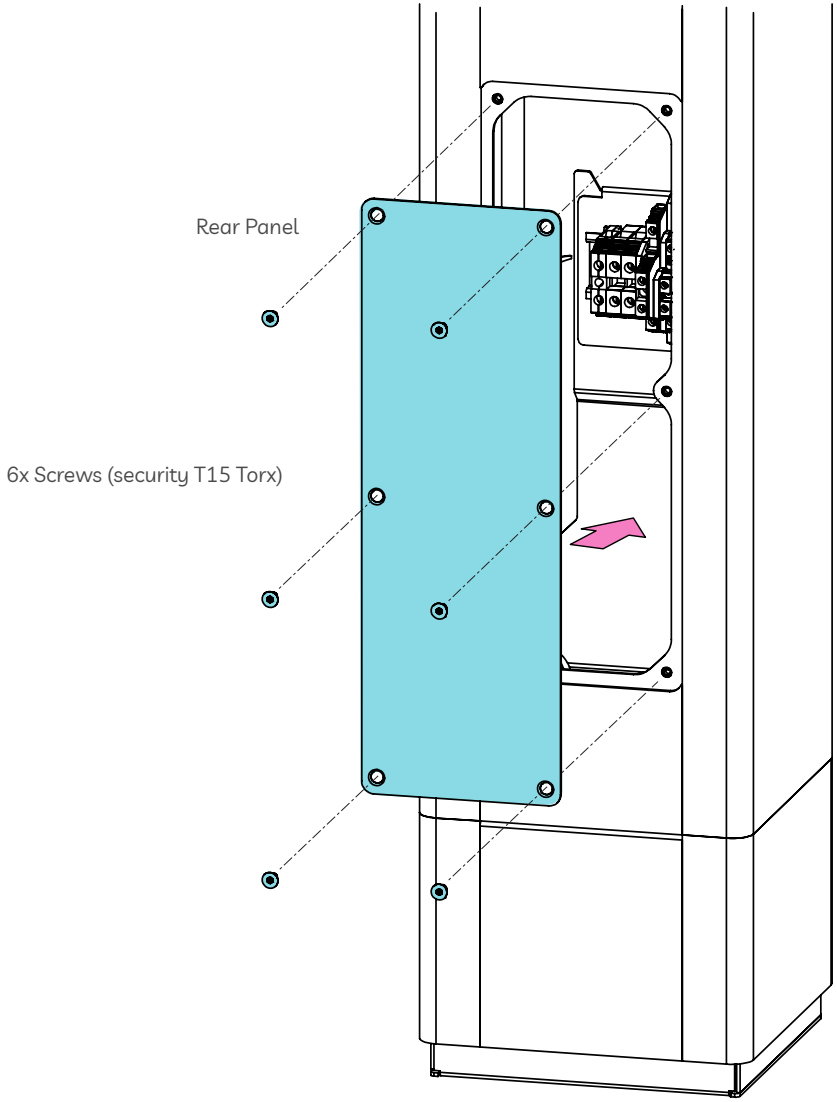

CONTINUE TO HOUSE INSTALLATION

it's electric

AT THE HOUSE

If installed outdoors, all penetrations must be weather sealed.

Before beginning any work on this installation, confirm the electrical breaker is “off”.

For indoor use, wall or ceiling mounted. This device shall be mounted at a sufficient height from grade such that the height of the storage means for the coupling device is located between 450 mm (18 inches) and 1.2 m (4 feet) from grade.

18 Route the **Power** and **Communication Cables** to the location of the **Home Unit**. The cable length should not exceed **150’ (ft)** between the **Home Unit** and **Post**. Mount **Home Unit** to wall per code using proper anchors.

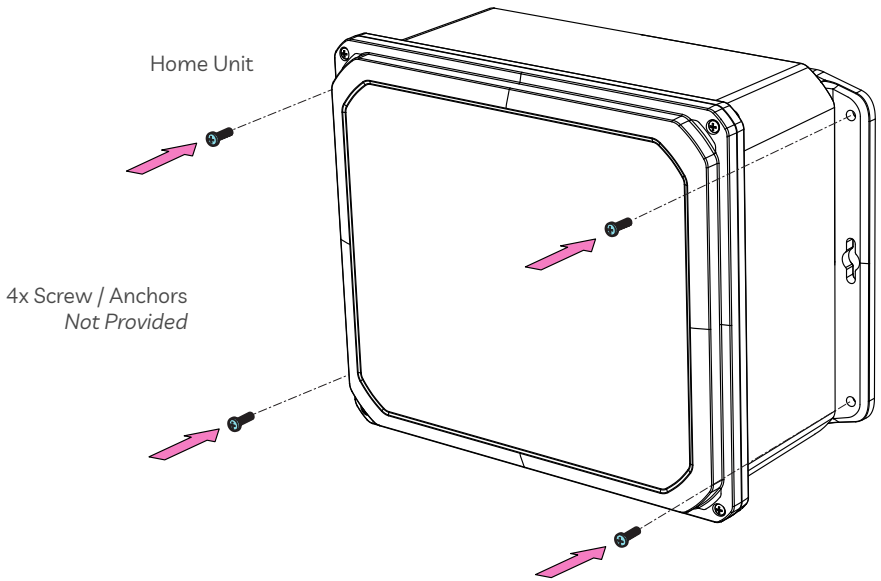

19 Open the **Home Unit** by removing the **(4) Screws** and **Enclosure Cover**.

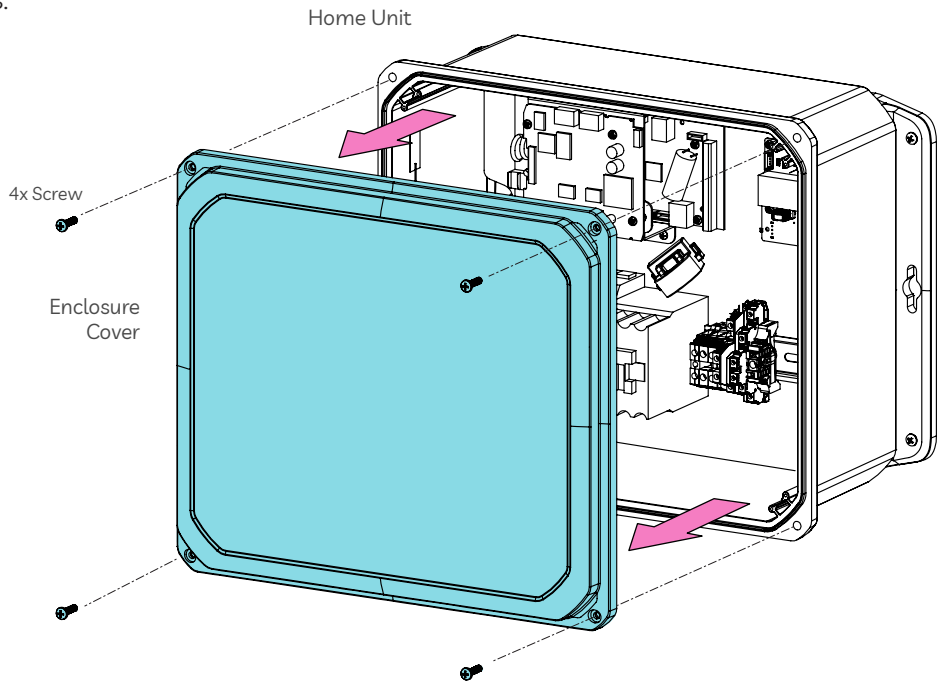

20

Connect the **Power Output** and **Communication Cable**:

Drill and install two (2) cable glands to accommodate cable and conduit as required. Run the **Power Output** and **Communication Cables** from the **Post** through the cable glands.

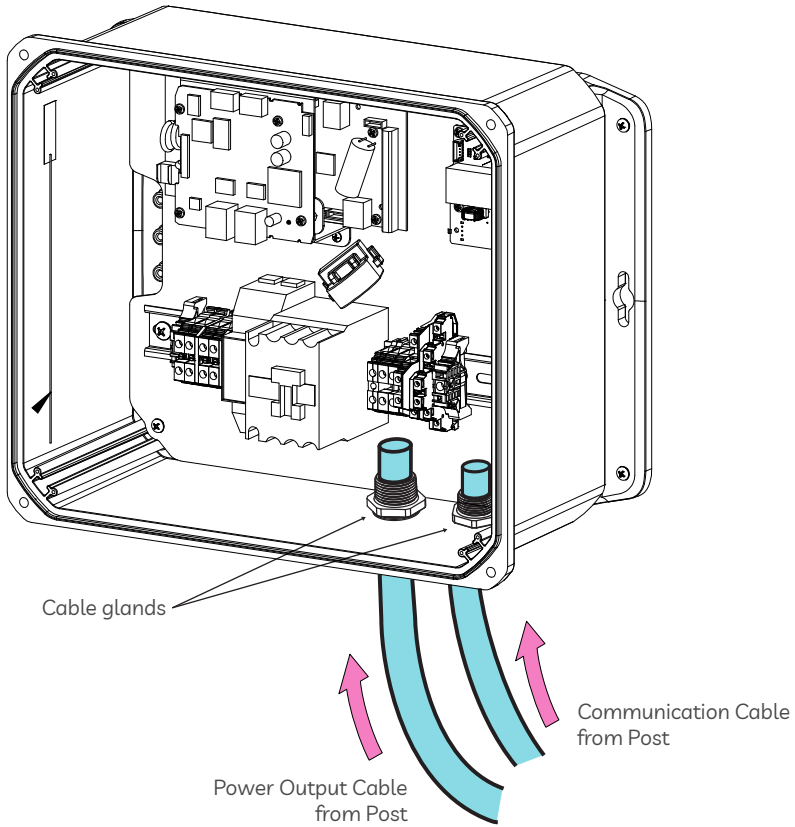

21

Connect the **Power Feed**:

Drill and install a cable gland to accommodate the cable and coduit as required. Run the **Power Feed Cable** through the cable gland.

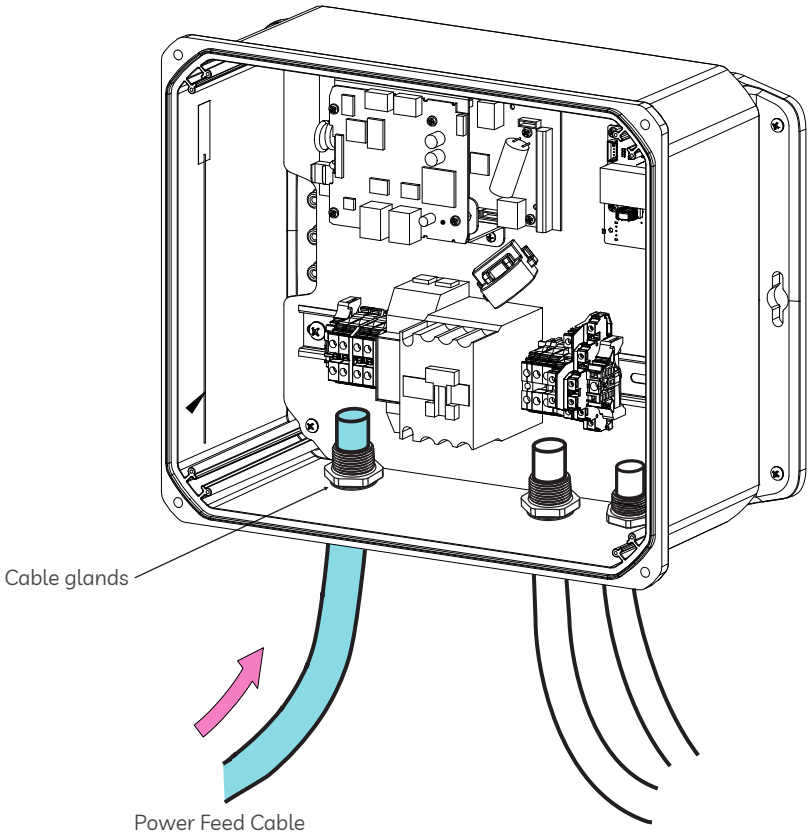

22 Home Unit Communication Connection

Attach the labeled connector from inside the **Home Unit** to the **Communication Cables** per the diagram below. For electrician furnished cables, ensure wiring is terminated such that conductors go from labeled 1 to labeled 1, 2 to 2, etc. Note that labeled locations are mirrored between **Post** and **Home Unit** sides.

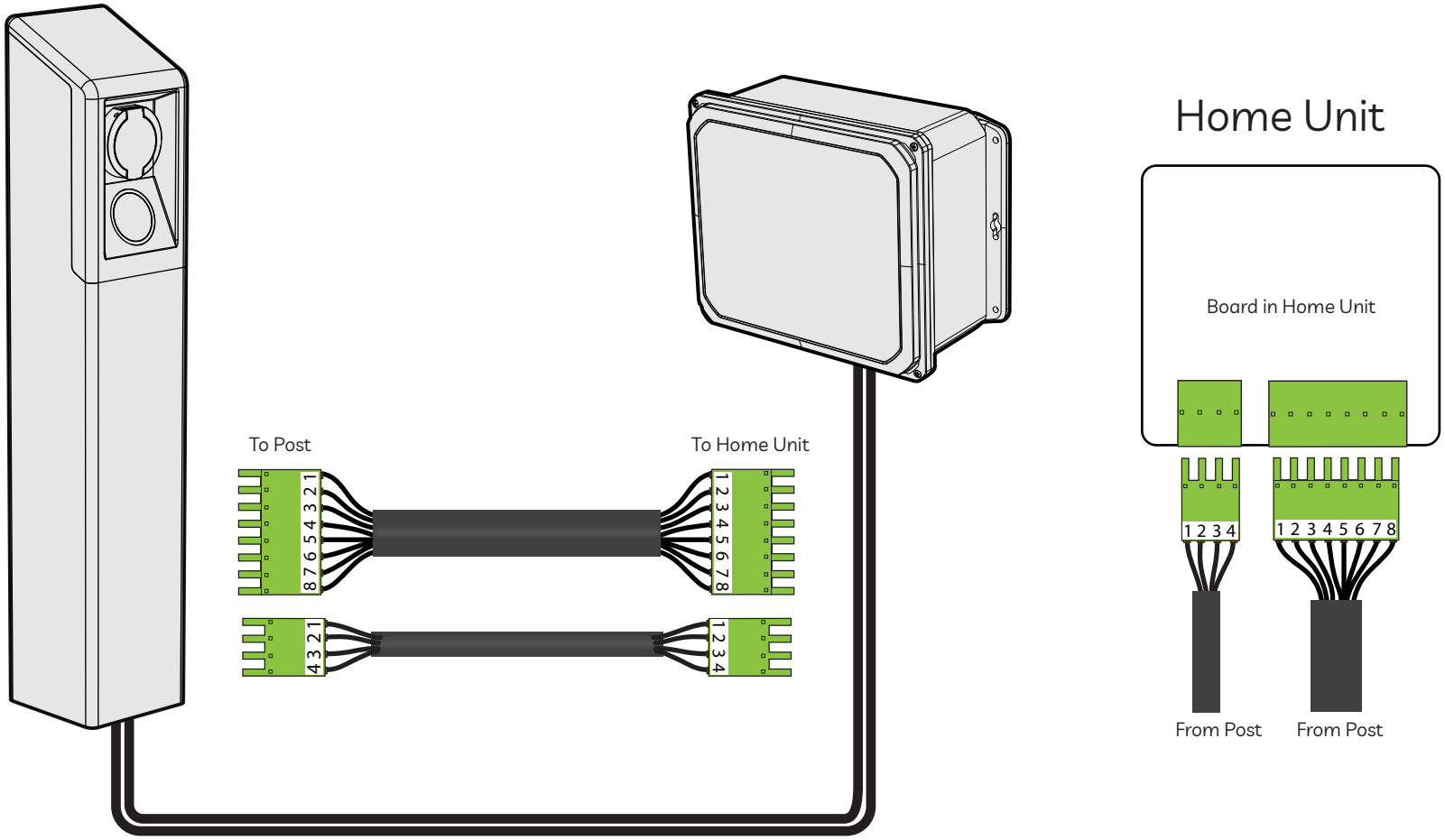

23

Torque Spec, **Terminal Blocks**:

- **A** 0.8-1.0Nm (7.1-8.8in-lb)
- **B** 0.4-0.6Nm (3.5-5.3in-lb)

Note: **Power Feed Cable** should not be connected to the electrical panel at this point.

Note: Wire colors for **Communication Cable** are arbitrary.

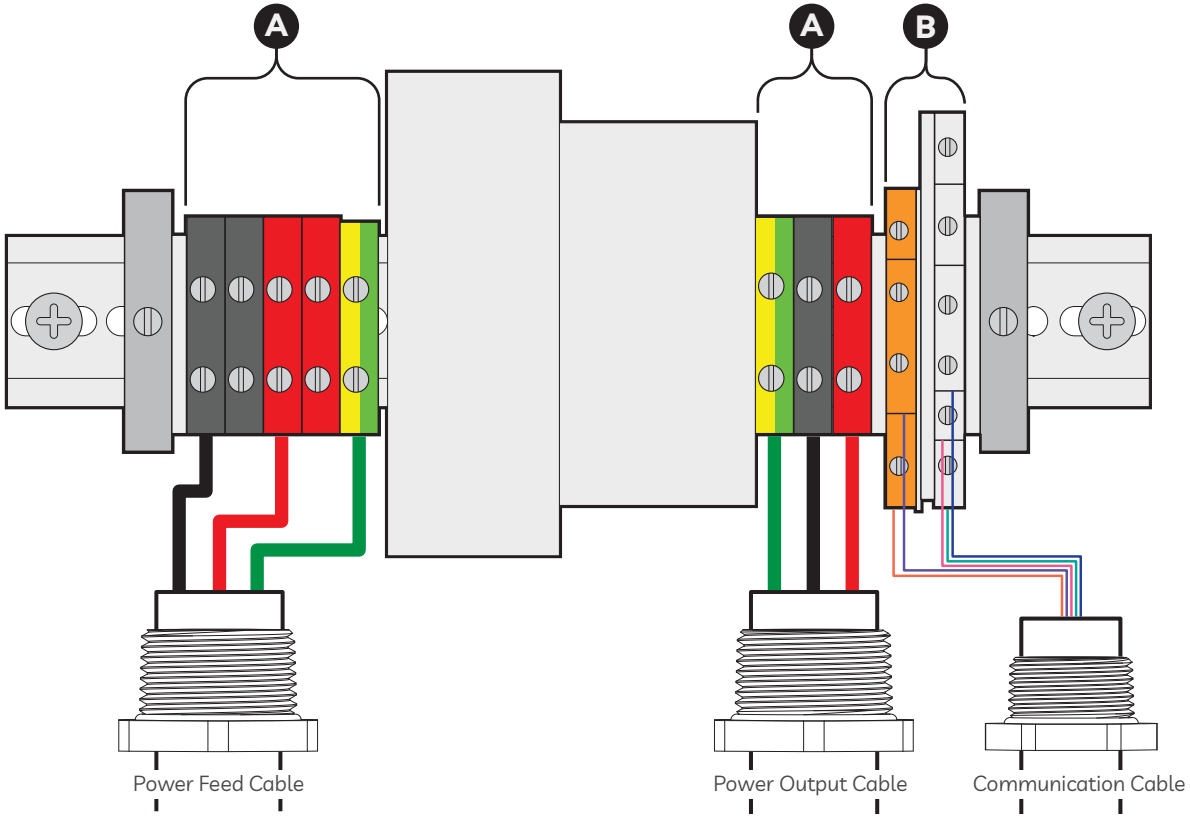

On the Street

Connections at the **Home Unit** should coordinate with connections at the **Post**.

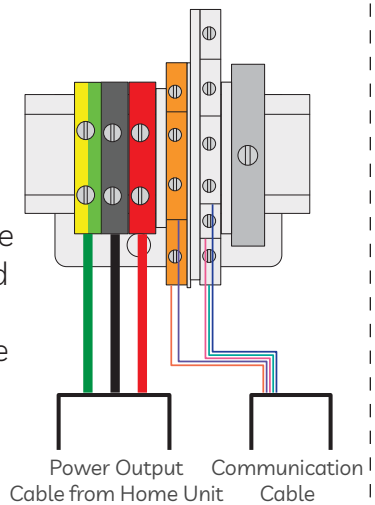

24 Turn off power at the electrical panel.

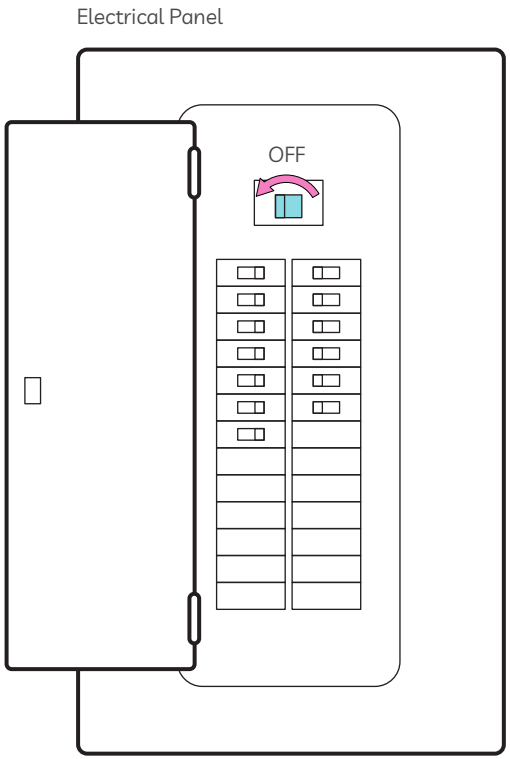

25 Connect the **Power Feed Cable** to the electrical panel per code. the it's electric brooklyn unit requires a 40A 2 pole breaker.

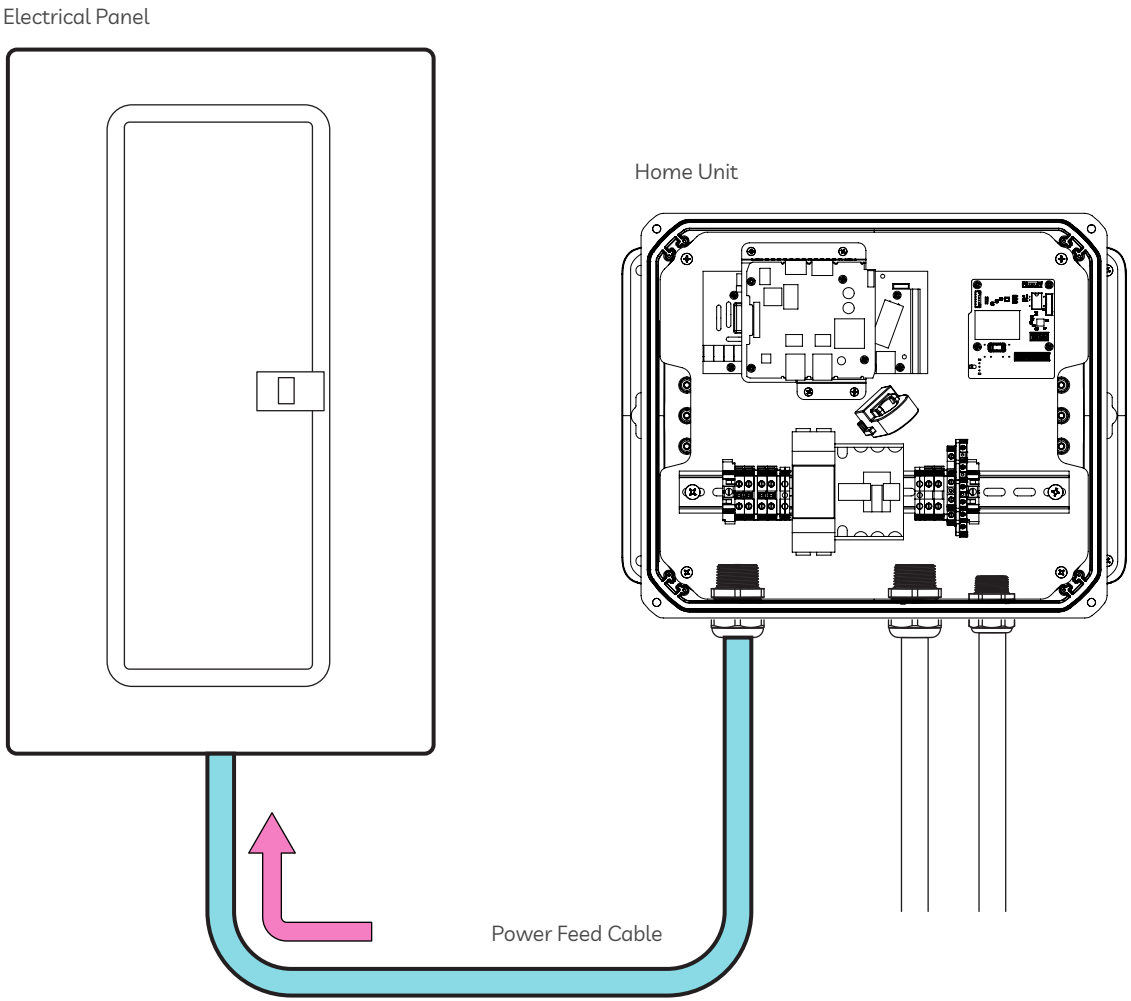

26 With the **(4) Screws**, attach the cover to the **Home Unit**.

27 Turn on the power at the panel.

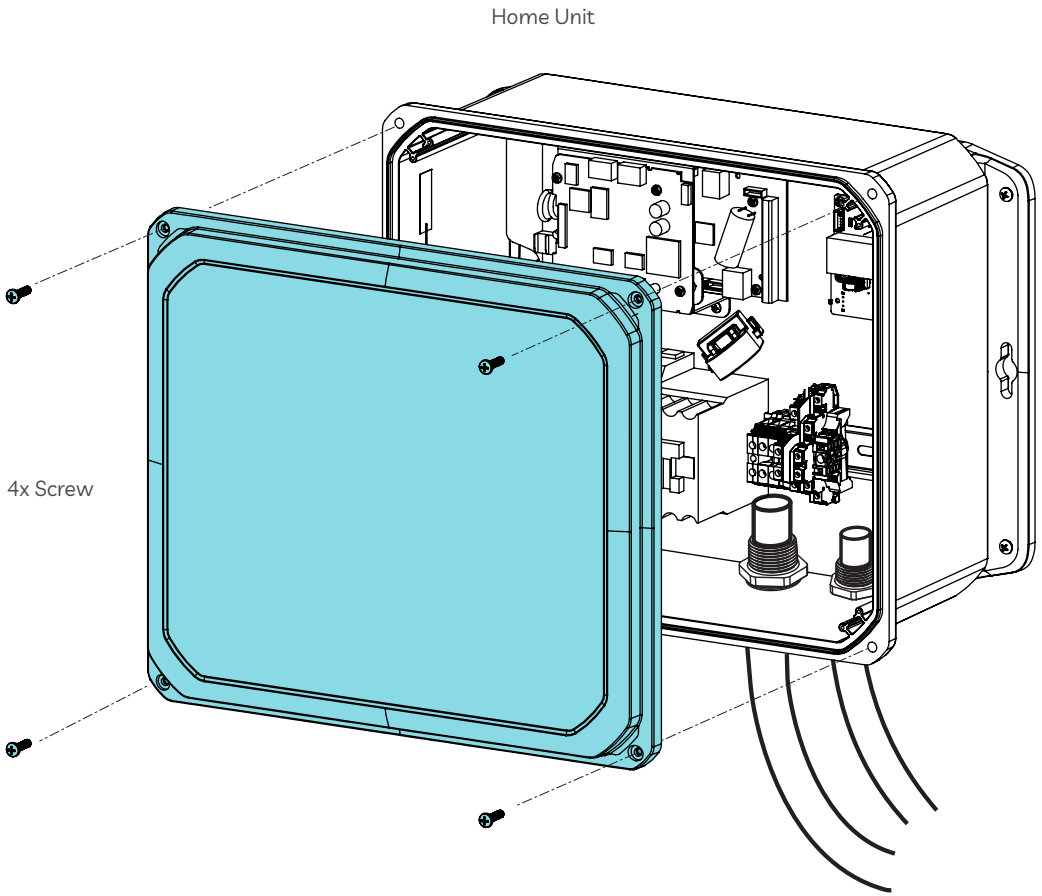

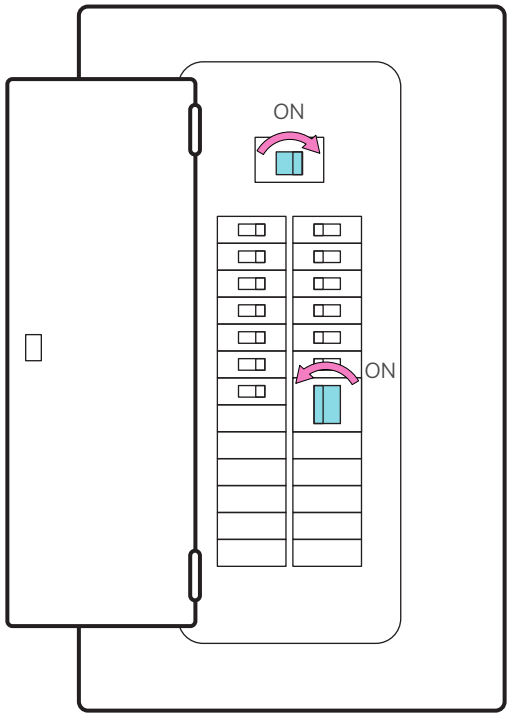

28

Go outside and check if the green light is glowing at the **Post**. This may take a couple minutes.

Before any modification or service of this device, be sure the electrical power is disconnected.

On the Street

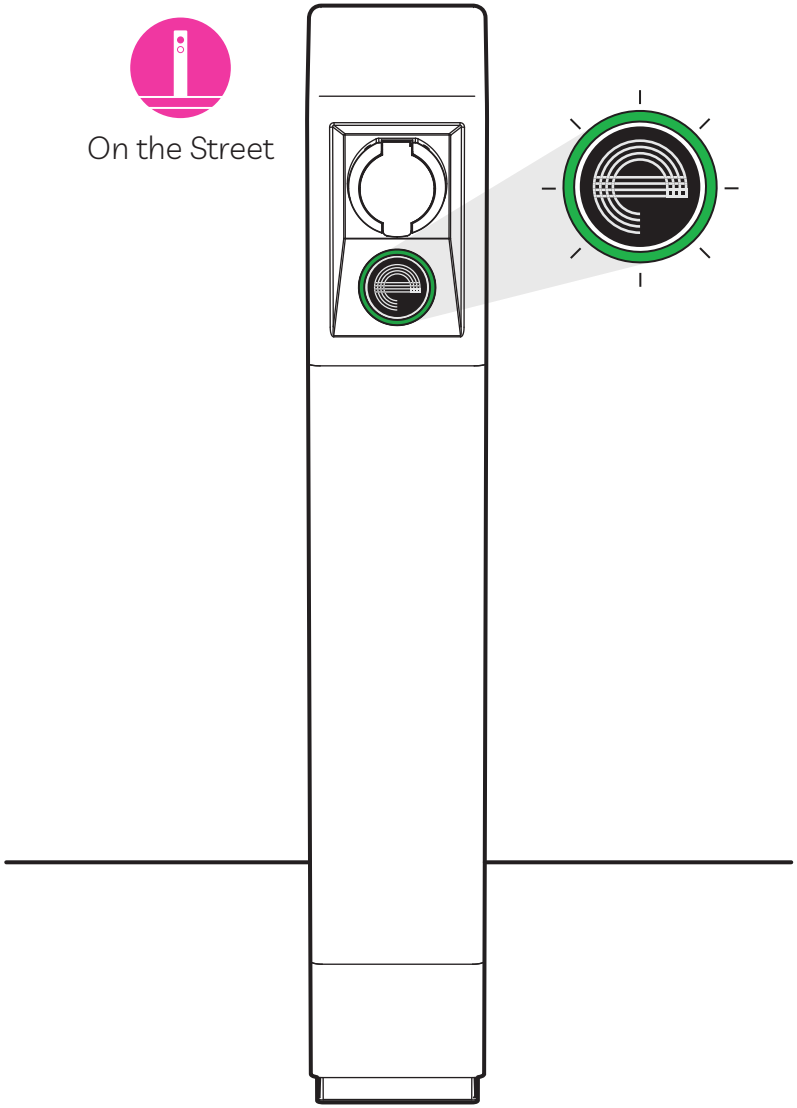

CONTINUE TO FINAL STEPS

FINAL STEPS

Testing

Following the installation of the Home Unit and Post, the installer will test the functionality of the charger using a EV charger test unit or an electric vehicle. Installer will use a dedicated account and associated RFID card provided by It's Electric Inc. The following functionality should be tested:

- Charger is recognized by the Mobile application.
- Swiping RFID card along RFID reader authorizes charging session.
- Mobile application authorizes charging session.
- Charging cord connects charger test unit or electric vehicle and performs a successful "handshake".
- Plug stays locked to charging Post.
- Charge cycle initicates with test unit and/or charge cycle initicates with EV, and draws 6KW minimum if allowed by vehicle
- Verify connection to an EV, along with appropriate charge rate up to 32A/6kW as allowed by the vehicle.
  OR
  Connect to EV simulator and verify connection and voltage (208-240 VAC) presence when in “charge requested” mode.
- Swiping RFID card along RFID reader ends charging session.
- Mobile application ends charging session.
- Plug cable is released from charging Post.
- LED indicator light status:
  - Green when not charging
  - Blue while charging