STRONGBÓ AGRI-TECH

REAL-TIME LIVESTOCK DATA

StrongBo Agritech Canada Ltd.™
MODEL NO. SB-WCTSC4R00

STRONGBÓ WP ELECTRICAL BOX

PRODUCT MANUAL

SAVE THIS MANUAL

NEED SUPPORT?

Contact +1 (647) 771-1287 or visit https://www.strongbo-agtech.com/ to speak with our representatives.

Disclaimer **3**
Equipment Installation **3**
Installation Instructions 3
Operation **4**
Intended Use 4
Operating Functions 4
Troubleshooting **5**
Maintenance **5**
Service 5
Cleaning 5
Technical Specifications **6**
Block Diagram 6
I/O Ratings 6
Inputs 6
Outputs 7
Compliance **7**
ISED non-interference disclaimer 7
ISED RF Exposure statement 8
FCC Compliance Statement 8
FCC RF Exposure Statement 8

Disclaimer

Any deviation from the contents of this manual could result in a hazard. To ensure safety, do not deviate from the provisions of this manual.

Equipment Installation

This product is designed to be used with a StrongBo SB-AWPFLR00 chassis. Installation instructions are for installation into this chassis. Pictured below is the product after installation.

Installation Instructions

1. Open back door on StrongBo chassis

2. Slide box into place from the top, so that the label text is in an upright orientation
3. Connect the correct cables to the correct terminals. Cables are identified with a flag label, and correspond with terminals indicated on the main product label.
4. Connect a battery using the alligator clips by attaching the red lead to the positive battery terminal, and the black lead to the negative battery terminal
5. Wait for LED to light up, it should begin to flash. It will automatically connect and the light will be solid.
6. Close the door and secure. The machine is ready for use.

Operation

Intended Use

This product is designed for indoor use and should be used with a StrongBo chassis to provide shelter from outdoor conditions. This product is used in an agricultural environment, specifically a cattle feedlot/pasture environment where it is around large livestock animals. The StrongBo chassis is the recommended structure to protect the electrical box from exposure to adverse conditions that arise from weather and being in contact with large animals.

Rated Temperature Range: -40 deg C to 65 deg C

Operating Functions

The product functions without user intervention using radio communication.

Troubleshooting

If a machine needs to be troubleshooted, please speak to a StrongBo representative.

Maintenance

Service

Contact StrongBo if a unit needs service. There are no refillable or replaceable components.

Cleaning

To clean the outside of the electrical box, leave it connected and rinse with a damp cloth. For tough dirt use a mild water and dish soap mixture.

Technical Specifications

Block Diagram

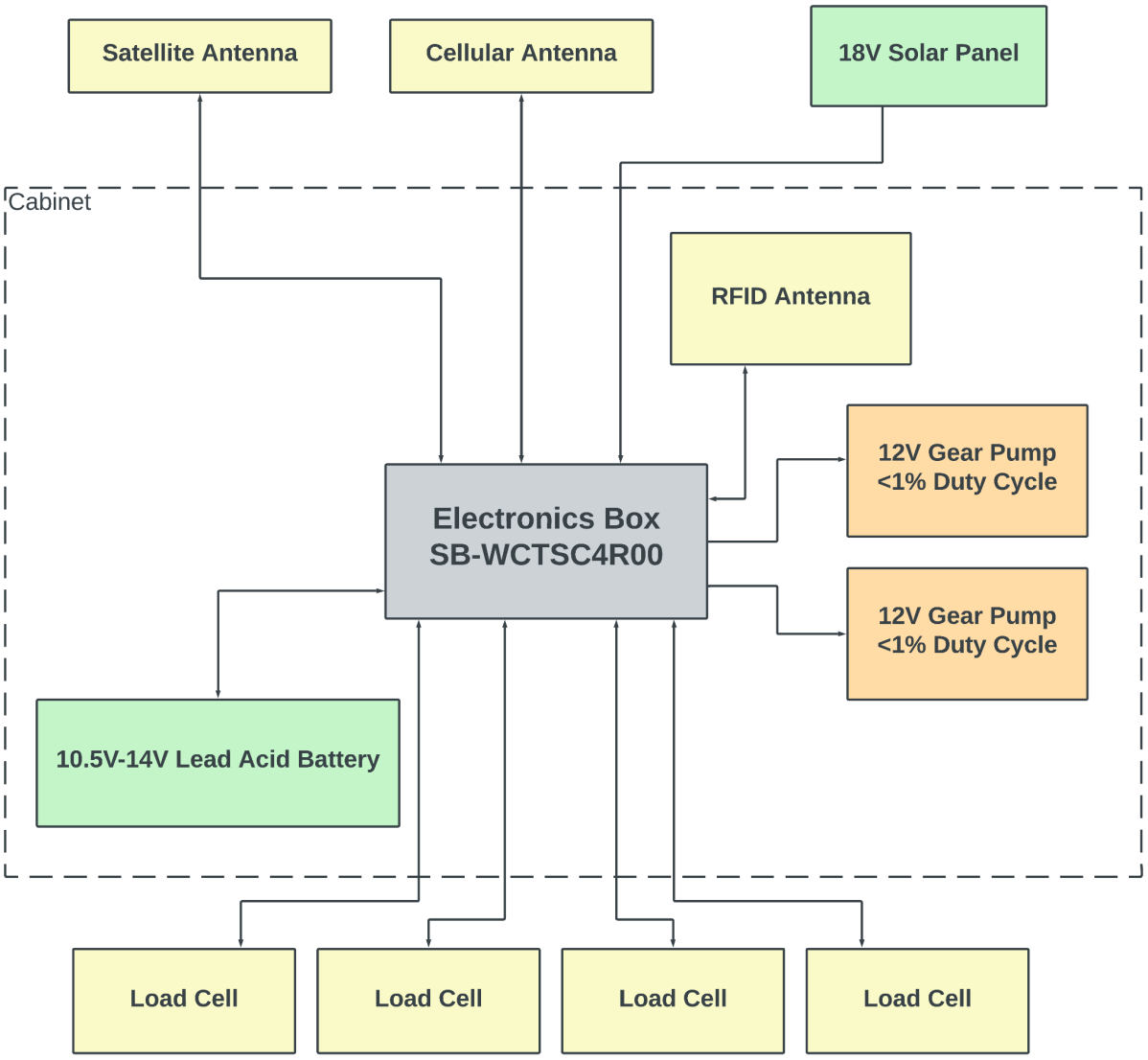

I/O Ratings

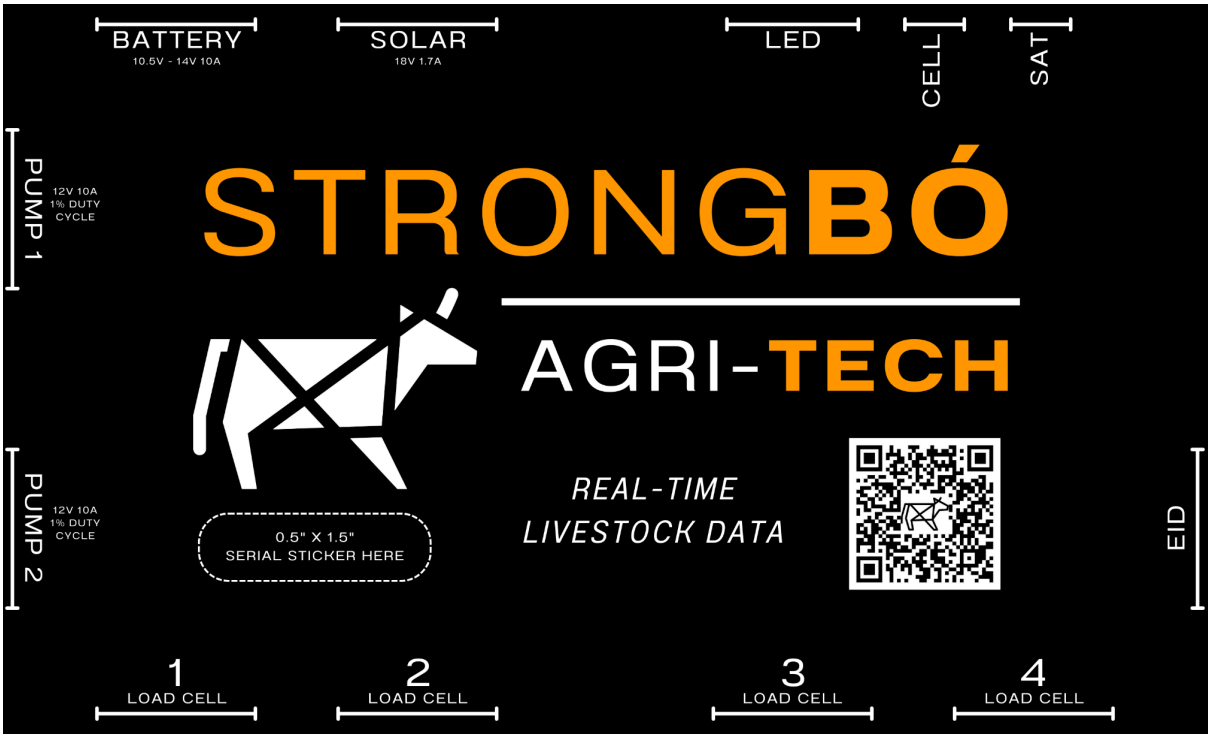

Inputs

Battery

Voltage Rating: 10.5VDC - 14VDC
Current Rating: 10A

Solar

Voltage Rating: 18V

Current Rating: 1.7A

Outputs

Pump Outputs

Voltage Rating: 12V
Current Rating: 10A
Duty Cycle Percentage: <1%

Load Cells

4x Load Cells

RFID

RFID Antenna

Cellular

LTE Antenna

Satellite

Satellite Antenna

Compliance

ISED non-interference disclaimer

This device contains licence-exempt transmitter(s)/receiver(s) that comply with Innovation, Science and Economic Development Canada's licence-exempt RSS(s). Operation is subject to the following two conditions:

1. This device may not cause interference.
2. This device must accept any interference, including interference that may cause undesired operation of the device.

This device complies with the Canadian ICES-003 Class A specifications. CAN ICES-003(A) / NMB-003 (A).

L'émetteur/récepteur exempt de licence contenu dans le présent appareil est conforme aux CNR d'Innovation, Sciences et Développement économique Canada applicables aux appareils radio exempt de licence. L'exploitation est autorisée aux deux conditions suivantes:

1. L'appareil ne doit pas produire de brouillage;
2. L'appareil doit accepter tout brouillage radioélectrique subi, même si le brouillage est susceptible d'en compromettre le fonctionnement.

Cet appareil numérique de la Canadian ICES-003. Cet appareil numérique de la classe A est conforme à la norme NMB-003 du Canada.

ISED RF Exposure statement

This equipment complies with ISED RSS-102 radiation exposure limits set forth for an uncontrolled environment. This equipment should be installed and operated with minimum distance 50 cm (19.7 inches) between the radiator and any part of your body. This transmitter must not be co-located or operating in conjunction with any other antenna or transmitter.

Cet équipement est conforme aux limites d'exposition aux radiations ISED CNR-102 établies pour un environnement non contrôlé. Une distance de séparation d'au moins 50 cm doivent être maintenue entre l'antenne de cet appareil et toutes les personnes. Lanceurs ou ne peuvent pas coexister cette antenne ou capteurs avec d'autres.

FCC Compliance Statement

This equipment has been tested and found to comply with the limits for a Class A digital device, pursuant to part 15 of the FCC Rules. These limits are designed to provide reasonable protection against harmful interference when the equipment is operated in a commercial environment. This equipment generates, uses, and can radiate radio frequency energy and, if not installed and used in accordance with the instruction manual, may cause harmful interference to radio communications. Operation of this equipment in a residential area is likely to cause harmful interference in which case the user will be required to correct the interference at his own expense.

This device complies with Part 15 of the FCC Rules. Operation is subject to the following two conditions:

1. this device may not cause harmful interference,
2. and this device must accept any interference received, including interference that may cause undesired operation. Please note that changes or modifications not expressly approved by the party responsible for compliance could void the user's authority to operate the equipment.

Changes or modifications not expressly approved by the party responsible for compliance could void the user's authority to operate the equipment.

FCC RF Exposure Statement

This equipment complies with FCC radiation exposure limits set forth for an uncontrolled environment. This transmitter must not be co-located or operating in conjunction with any other antenna or transmitter. In order to avoid the possibility of exceeding the FCC radio frequency exposure limits, this equipment should be installed and operated with a minimum distance 40 cm (15.8 inches) between the antenna and your body during normal operation. Users must follow the specific operating instructions for satisfying RF exposure compliance.