# TEST REPORT

**Product Name : Automatic Upper Arm Blood Pressure Monitor**
**Model Number : BA-831X, BA-832X, BA-833X, BA-837X, BA-838X, BA-842X, BA-843X, BA-845X, BA-847X, BA-849X, BA-851X, BA-852X, BA-855X, BA-835, BA-836, BA-839, BA-840, BA-856**
**FCC ID : 2BE44-ET24BLE**

Prepared for : DONGGUAN E-TEST TECHNOLOGY CO., LTD.
Address : Room 201,301, Building 1, Changping Section No.1, Dongshen Road, Changping Town, Dongguan City, Guangdong, China

Prepared by : EMTEK (DONGGUAN) CO., LTD.
Address : -1&2/F.,Building 2, Zone A, Zhongda Marine Biotechnology Research and Development Base, No.9, Xincheng Avenue, Songshanhu High-technology Industrial Development Zone, Dongguan, Guangdong, China

TEL: +86-0769-22807078
FAX: +86-0769-22807079

Report Number : EDG2402040009E00101R
Date(s) of Tests : February 19, 2024 to March 06, 2024
Date of issue : March 06, 2024

# Table of Contents

1 TEST RESULT CERTIFICATION ..... 3
2 EUT TECHNICAL DESCRIPTION ..... 5
3 SUMMARY OF TEST RESULT ..... 6
4 TEST METHODOLOGY ..... 7
4.1 GENERAL DESCRIPTION OF APPLIED STANDARDS ..... 7
4.2 MEASUREMENT EQUIPMENT USED ..... 7
4.3 DESCRIPTION OF TEST MODES ..... 8
5 FACILITIES AND ACCREDITATIONS ..... 9
5.1 FACILITIES ..... 9
5.2 EQUIPMENT ..... 9
5.3 LABORATORY ACCREDITATIONS AND LISTINGS ..... 9
6 TEST SYSTEM UNCERTAINTY ..... 10
7 SETUP OF EQUIPMENT UNDER TEST ..... 11
7.1 RADIO FREQUENCY TEST SETUP 1 ..... 11
7.2 RADIO FREQUENCY TEST SETUP 2 ..... 11
7.3 CONDUCTED EMISSION TEST SETUP ..... 13
7.4 BLOCK DIAGRAM CONFIGURATION OF TEST SYSTEM ..... 14
7.5 SUPPORT EQUIPMENT ..... 14
8 FREQUENCY HOPPING SYSTEM REQUIREMENTS ..... 15
8.1 Standard Applicable ..... 15
8.2 EUT Pseudorandom Frequency Hopping Sequence ..... 15
8.3 Equal Hopping Frequency Use ..... 16
8.4 Frequency Hopping System ..... 16
9 TEST REQUIREMENTS ..... 17
9.1 DTS 6DB BANDWIDTH ..... 17
9.2 DTS 99% BANDWIDTH ..... 22
9.3 MAXIMUM PEAK CONDUCTED OUTPUT POWER ..... 26
9.4 MAXIMUM POWER SPECTRAL DENSITY ..... 31
9.5 UNWANTED EMISSIONS IN NON-RESTRICTED FREQUENCY BANDS ..... 35
9.6 RADIATED SPURIOUS EMISSION ..... 49
CONDUCTED EMISSIONS TEST ..... 57
9.7 ANTENNA APPLICATION ..... 58

# 1 TEST RESULT CERTIFICATION

| | | |
|---|---|---|
| Applicant | : | DONGGUAN E-TEST TECHNOLOGY CO., LTD. |
| Address | : | Room 201,301, Building 1, Changping Section No.1, Dongshen Road, Changping Town, Dongguan City, Guangdong, China |
| Manufacturer | : | DONGGUAN E-TEST TECHNOLOGY CO., LTD. |
| Address | : | Room 201,301, Building 1, Changping Section No.1, Dongshen Road, Changping Town, Dongguan City, Guangdong, China |
| EUT | : | Automatic Upper Arm Blood Pressure Monitor |
| Model Name | : | BA-831X, BA-832X, BA-833X, BA-837X, BA-838X, BA-842X, BA-843X, BA-845X, BA-847X, BA-849X, BA-851X, BA-852X, BA-855X, BA-835, BA-836, BA-839, BA-840, BA-856 |
| Trademark | : | N/A |

Measurement Procedure Used:

| APPLICABLE STANDARDS | |
|---|---|
| **STANDARD** | **TEST RESULT** |
| FCC 47 CFR Part 2, Subpart J<br>FCC 47 CFR Part 15, Subpart C | **PASS** |
| IC RSS-GEN, Issue 5(04-2018)+A1(03-2019)+A2(02-2021)<br>IC RSS-247 Issue 2(02-2017) | **PASS** |

The above equipment was tested by EMTEK(DONGGUAN) CO., LTD. The test data, data evaluation, test procedures, and equipment configurations shown in this report were made in accordance with the procedures given in ANSI C63.10 (2013) and the energy emitted by the sample EUT tested as described in this report is in compliance with the requirements of FCC Rules Part 2, Part 15.247, IC RSS-247 Issue 2 and IC RSS-GEN, Issue 5.

The test results of this report relate only to the tested sample identified in this report

Date of Test : February 19, 2024 to March 06, 2024

Prepared by : Warren Deng /Editor

Reviewer : Tim Dong /Supervisor

Approve & Authorized Signer : Sam Lv / Manager

# Modified History

| Version | Report No. | Revision Date | Summary |
|---|---|---|---|
| | EDG2402040009E00101R | / | Original Report |
| | | | |
| | | | |

## 2 EUT TECHNICAL DESCRIPTION

| Characteristics | Description |
|---|---|
| **Product:** | Automatic Upper Arm Blood Pressure Monitor |
| **Model Number:** | BA-831X, BA-832X, BA-833X, BA-837X, BA-838X, BA-842X, BA-843X, BA-845X, BA-847X, BA-849X, BA-851X, BA-852X, BA-855X, BA-835, BA-836, BA-839, BA-840, BA-856<br>All models are the same except the model name and color. Here, BA-831X is selected for all tests. |
| **Sample:** | 1# |
| **Data Rate:** | 1Mbps, 2Mbps |
| **Modulation:** | GFSK |
| **Operating Frequency Range(s) :** | 2402-2480MHz |
| **Number of Channels:** | 40 channels |
| **Transmit Power Max:** | -10.11 dBm(0.000097 W) |
| **Antenna Type:** | PCB Antenna |
| **Antenna Gain:** | 1.13dBi |
| **Power supply:** | DC 6V from battery |
| **Temperature Range:** | 0°C ~ +40°C |

***Note1:*** *for more details, please refer to the User's manual of the EUT.*

# 3 SUMMARY OF TEST RESULT

| FCC Part Clause | IC Part Clause | Test Parameter | Verdict | Remark |
|---|---|---|---|---|
| 15.247(a)(2) | RSS-247 5.2(a)<br>RSS-Gen 6.7 | Emission Bandwidth | PASS | |
| 15.247(b)(3) | RSS-247 5.4(d)<br>RSS-Gen 6.12 | Maximum Peak Conducted Output Power | PASS | |
| 15.247(e) | RSS-247 5.2(b)<br>RSS-Gen 6.12 | Maximum Power Spectral Density Level | PASS | |
| 15.247(d) | RSS-247 5.5 | Unwanted Emission Into Non-Restricted Frequency Bands | PASS | |
| 15.247(d) | RSS-247 5.5 | Unwanted Emission Into Restricted Frequency Bands (conducted) | PASS | |
| 15.247(d)<br>15.209<br>15.205 | RSS-Gen 8.9<br>RSS-Gen 8.10<br>RSS-Gen 6.13<br>RSS-247 3.3<br>RSS-247 5.5 | Radiated Spurious Emission | PASS | |
| 15.207 | RSS-Gen 8.8 | Conducted Emission Test | PASS | |
| 15.203<br>15.247(b) | RSS-Gen 6.8<br>RSS-247 5.4 | Antenna Application | PASS | |
| NOTE1: N/A (Not Applicable)<br>NOTE2: According to FCC OET KDB 558074, the report use radiated measurements in the restricted frequency bands. In addition, the radiated test is also performed to ensure the emissions emanating from the device cabinet also comply with the applicable limits. | | | | |

RELATED SUBMITTAL(S) / GRANT(S):

This submittal(s) (test report) is intended for **FCC ID: 2BE44-ET24BLE** filing to comply with Section 15.247 of the FCC Part 15, Subpart C Rules.

# 4 TEST METHODOLOGY

## 4.1 GENERAL DESCRIPTION OF APPLIED STANDARDS

According to its specifications, the EUT must comply with the requirements of the following standards:
FCC 47 CFR Part 2, Subpart J
FCC 47 CFR Part 15, Subpart C
IC RSS-GEN, Issue 5(04-2018)+A1(03-2019)+A2(02-2021)
IC RSS-247 Issue 2(02-2017)
FCC KDB 558074 D01 15.247 Meas Guidance v05r02

## 4.2 MEASUREMENT EQUIPMENT USED

**Conducted Emission Test Equipment**

| Equipment | Manufacturer | Model No. | Serial No. | Last Cal. | Cal. Interval |
|---|---|---|---|---|---|
| EMI Test Receiver | Rohde&Schwarz | ESCI | 100137 | 2023/5/11 | 1Year |
| AMN | Rohde&Schwarz | ENV216 | 101209 | 2023/5/11 | 1Year |
| AMN | Rohde&Schwarz | ENV216 | 100017 | 2023/5/11 | 1Year |
| RF Switching Unit | CDS | RSU-M2 | 38401 | 2023/5/11 | 1Year |
| AMN | Schwarzbeck | NNLK8121 | 8121-641 | 2023/5/11 | 1Year |
| AMN | Rohde&Schwarz | ESH3-Z6 | 101101 | 2023/5/11 | 1Year |
| AMN | Rohde&Schwarz | ESH3-Z6 | 101102 | 2023/5/11 | 1Year |
| Power Splitters & Dividers | Weinschel Associates | WA1506A | A1066 | 2023/5/11 | 1Year |
| Current Probe | FCC | F-52 | 8377 | 2023/5/11 | 1Year |
| Passive voltage probe | Rohde&Schwarz | ESH2-Z3 | 100122 | 2023/5/11 | 1Year |

**For Spurious Emissions Test**

| Equipment | Manufacturer | Model No. | Serial No. | Last Cal. | Cal. Interval |
|---|---|---|---|---|---|
| EMI Test Receiver | Rohde&Schwarz | ESCI | 101415 | 2023/5/11 | 1Year |
| Bi-log Hybrid Antenna | Schwarzbeck | VULB9163 | 141 | 2023/5/15 | 1Year |
| Pre-Amplifie | HP | 8447F | OPTH64 | 2023/5/11 | 1 Year |
| Signal Analyzer | R&S | FSV30 | 103039 | 2023/5/11 | 1 Year |
| Horn Antenna | Schwarzbeck | BBHA9120D | 1272 | 2023/5/15 | 1Year |
| Horn Antenna | Schwarzbeck | BBHA9170 | 9170-567 | 2023/5/15 | 1Year |
| Pre-Amplifie | LUNAR EM | PM1-18-40 | J10100000081 | 2023/5/11 | 1Year |
| Loop antenna | Schwarzbeck | FMZB1519 | 1519-012 | 2023/5/15 | 1Year |

**For other test items:**

| Equipment | Manufacturer | Model No. | Serial No. | Last Cal. | Cal. Interval |
|---|---|---|---|---|---|
| Wireless Connectivity Tester | R&S | CMW270 | 102543 | 2023/05/11 | 1Year |
| Automatic Control Unit | Tonscend | JS0806-2 | 21I8060480 | 2023/05/11 | 1Year |
| Signal Analyzer | KEYSIGHT | N9010B | MY60242456 | 2023/05/11 | 1Year |
| Analog Signal Generator | KEYSIGHT | N5173B | MY61252625 | 2023/05/11 | 1Year |
| UP/DOWN-Converter | R&S | CMW-Z800A | 100274 | 2023/05/11 | 1Year |
| Vector Signal Generator | KEYSIGHT | N5182B | MY61252674 | 2023/05/11 | 1Year |
| Frequency Extender | KEYSIGHT | N5182BX07 | MY59362541 | 2023/05/11 | 1Year |
| Temperature&Humidity test chamber | ESPEC | EL-02KA | 12107166 | 2023/05/11 | 1 Year |

## 4.3 DESCRIPTION OF TEST MODES

The EUT has been tested under its typical operating condition.
The EUT configuration for testing is installed on RF field strength measurement to meet the Commissions requirement and operating in a manner which intends to maximize its emission characteristics in a continuous normal application.

The Transmitter was operated in the normal operating mode. The TX frequency was fixed which was for the purpose of the measurements.

Test of channel included the lowest and middle and highest frequency to perform the test, then record on this report.

Those data rates (Bluetooth DTS :1Mbps, 2Mbps) were used for all test.

Pre-defined engineering program for regulatory testing used to control the EUT for staying in continuous transmitting and receiving mode is programmed.

Frequency and Channel list for Bluetooth DTS:

| Channel | Frequency (MHz) | Channel | Frequency (MHz) | Channel | Frequency (MHz) |
|---|---|---|---|---|---|
| 0 | 2402 | 19 | 2440 | … | … |
| 1 | 2404 | 20 | 2442 | 37 | 2476 |
| 2 | 2406 | 21 | 2444 | 38 | 2478 |
| … | … | … | … | 39 | 2480 |
| Note: fc=2402MHz+k×2MHz k=1 to 39 | | | | | |

Test Frequency and channel for Bluetooth DTS:

| Lowest Frequency | | Middle Frequency | | Highest Frequency | |
|---|---|---|---|---|---|
| Channel | Frequency (MHz) | Channel | Frequency (MHz) | Channel | Frequency (MHz) |
| 0 | 2402 | 19 | 2440 | 39 | 2480 |

# 5 FACILITIES AND ACCREDITATIONS

## 5.1 FACILITIES

All measurement facilities used to collect the measurement data are located at:

EMTEK (DONGGUAN) CO., LTD.
-1&2/F.,Building 2, Zone A, Zhongda Marine Biotechnology Research and Development Base, No.9, Xincheng Avenue, Songshanhu High-technology Industrial Development Zone, Dongguan, Guangdong, China
The sites are constructed in conformance with the requirements of ANSI C63.7, ANSI C63.4 and CISPR Publication 22.

## 5.2 EQUIPMENT

Radiated emissions are measured with one or more of the following types of linearly polarized antennas: tuned dipole, biconical, log periodic, bi-log, and/or ridged waveguide, horn. Spectrum analyzers with preselectors and quasi-peak detectors are used to perform radiated measurements.

Conducted emissions are measured with Line Impedance Stabilization Networks and EMI Test Receivers.

Calibrated wideband preamplifiers, coaxial cables, and coaxial attenuators are also used for making measurements.

All receiving equipment conforms to CISPR Publication 16-1, “Radio Interference Measuring Apparatus and Measurement Methods.”

## 5.3 LABORATORY ACCREDITATIONS AND LISTINGS

| | | |
|---|---|---|
| Site Description | | |
| EMC Lab. | : | **Accredited by CNAS**<br>The Laboratory has been assessed and proved to be in compliance with CNAS-CL01:2018<br>The Certificate Registration Number is L3150<br><br>**Accredited by FCC**<br>Designation Number: CN1300<br>Test Firm Registration Number: 945551<br><br>**Accredited by A2LA**<br>The Certificate Registration Number is 4321.02<br><br>**Accredited by Industry Canada**<br>The Certificate Registration Number is CN0113 |
| Name of Firm | : | EMTEK (DONGGUAN) CO., LTD. |
| Site Location | : | -1&2/F.,Building 2, Zone A, Zhongda Marine Biotechnology Research and Development Base, No.9, Xincheng Avenue, Songshanhu High-technology Industrial Development Zone, Dongguan, Guangdong, China |

# 6 TEST SYSTEM UNCERTAINTY

The following measurement uncertainty levels have been estimated for tests performed on the apparatus:

| Test Parameter | Measurement Uncertainty |
|---|---|
| Radio Frequency | ±1x10^-5 |
| Maximum Peak Output Power Test | ±1.0dB |
| Conducted Emissions Test | ±2.0dB |
| Radiated Emission Test | ±2.0dB |
| Power Density | ±2.0dB |
| Occupied Bandwidth Test | ±1.0dB |
| Band Edge Test | ±3dB |
| All emission, radiated | ±3dB |
| Antenna Port Emission | ±3dB |
| Temperature | ±0.5℃ |
| Humidity | ±3% |

Measurement Uncertainty for a level of Confidence of 95%

# 7 SETUP OF EQUIPMENT UNDER TEST

## 7.1 RADIO FREQUENCY TEST SETUP 1

The Bluetooth component's antenna ports(s) of the EUT are connected to the measurement instrument per an appropriate attenuator. The EUT is controlled by PC/software to emit the specified signals for the purpose of measurements.

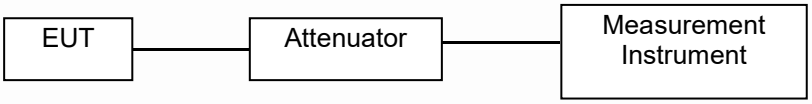


## 7.2 RADIO FREQUENCY TEST SETUP 2

The test site semi-anechoic chamber has met the requirement of NSA tolerance 4 dB according to the standards: ANSI C63.10. The test distance is 3m.The setup is according to the requirements in Section 13.1.4.1 of ANSI C63.10-2013 and CAN/CSA-CEI/IEC CISPR 22.

Below 30MHz：
The EUT is placed on a turntable 0.8meters above the ground in the chamber, 3 meter away from the antenna (loop antenna). The Antenna should be positioned with its plane vertical at the specified distance from the EUT and rotated about its vertical axis for maximum response at each azimuth about the EUT. The center of the loop shall be 1 m above the ground. For certain applications, the loop antenna plane may also need to be positioned horizontally at the specified distance from the EUT.

Above 30MHz：
The EUT is placed on a turntable 0.8meters above the ground in the chamber, 3 meter away from the antenna. The maximal emission value is acquired by adjusting the antenna height, polarisation and turntable azimuth. Normally, the height range of antenna is 1 m to 4 m, the azimuth range of turntable is 0° to 360°, and the receive antenna has two polarizations Vertical (V) and Horizontal (H).

Above 1GHz:
(Note: the FCC's permission to use 1.5m as an alternative per TCBC Conf call of Dec. 2, 2014.)
The EUT is placed on a turntable 1.5 meters above the ground in the chamber, 3 meter away from the antenna. The maximal emission value is acquired by adjusting the antenna height, polarisation and turntable azimuth. Normally, the height range of antenna is 1 m to 4 m, the azimuth range of turntable is 0° to 360°, and the receive antenna has two polarizations Vertical (V) and Horizontal (H).

(a) Radiated Emission Test Set-Up, Frequency Below 30MHz

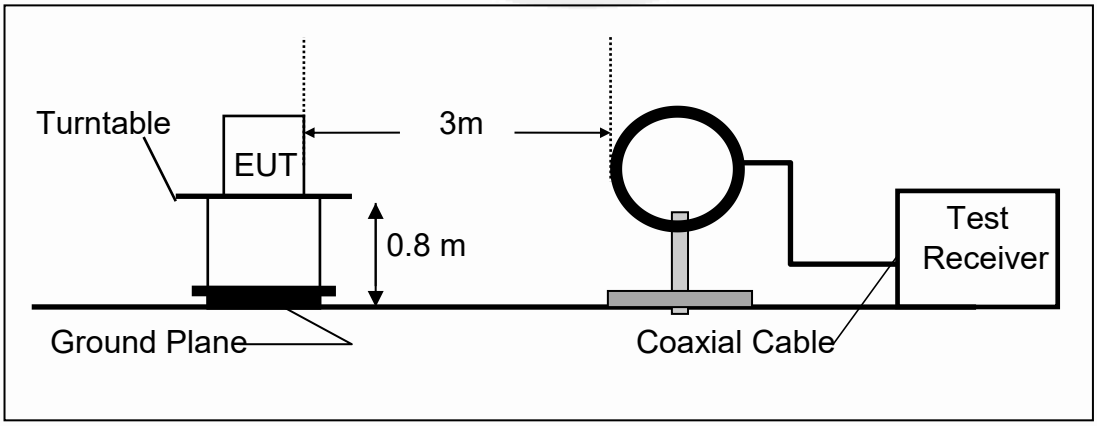

(b) Radiated Emission Test Set-Up, Frequency Below 1000MHz

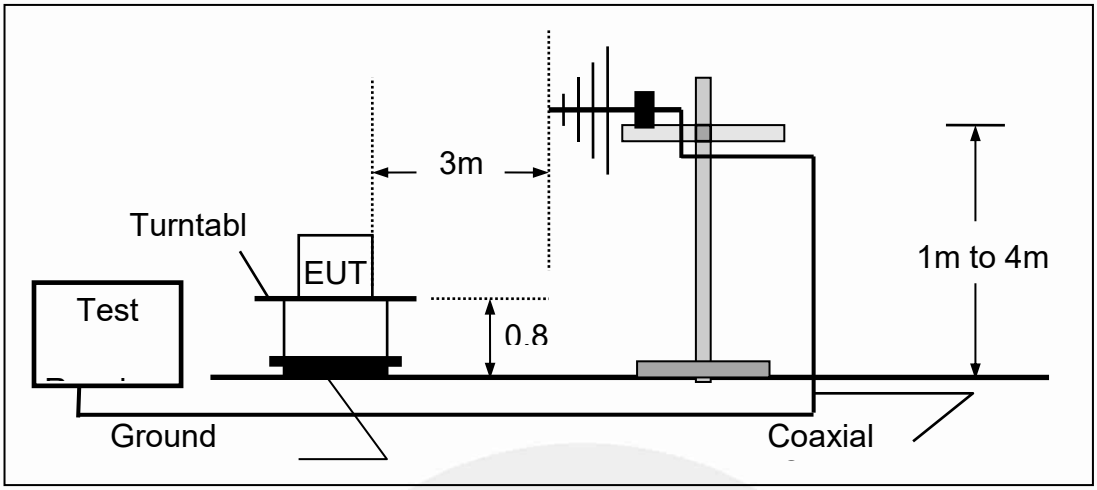


(c) Radiated Emission Test Set-Up, Frequency above 1000MHz

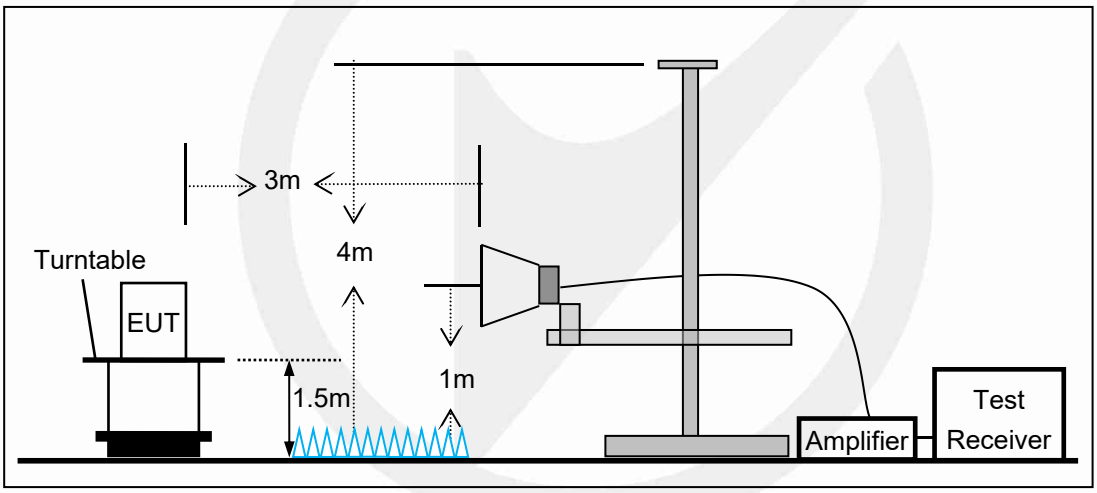

### 7.3 CONDUCTED EMISSION TEST SETUP

The mains cable of the EUT (Perfect Share Mini) must be connected to LISN. The LISN shall be placed 0.8m from the boundary of EUT and bonded to a ground reference plane for LISN mounted on top of the ground reference plane. This distance is between the closest points of the LISN and the EUT. All other units of the EUT and associated equipment shall be at least 0.8m from the LISN.

Ground connections, where required for safety purposes, shall be connected to the reference ground point of the LISN and, where not otherwise provided or specified by the manufacturer, shall be of same length as the mains cable and run parallel to the mains connection at a separation distance of not more than 0.8m.

According to the requirements in Section 13.1.4.1 of ANSI C63.10-2013 Conducted emissions from the EUT measured in the frequency range between 0.15 MHz and 30 MHz using CISPR Quasi-Peak and average detector mode.

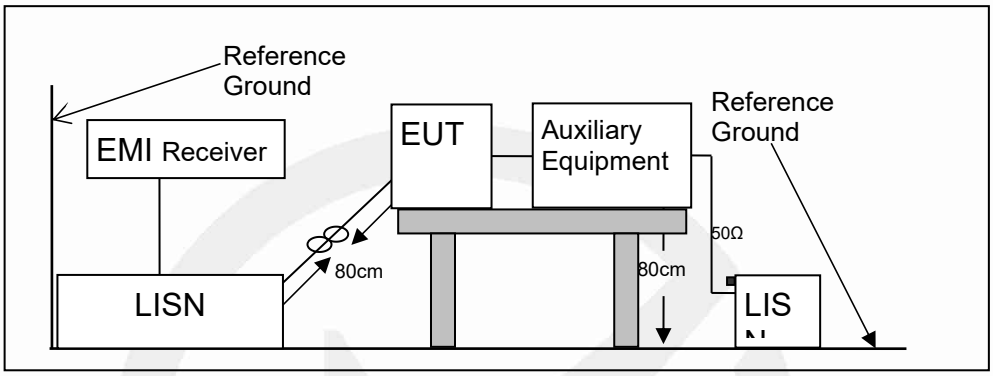

## 7.4 BLOCK DIAGRAM CONFIGURATION OF TEST SYSTEM

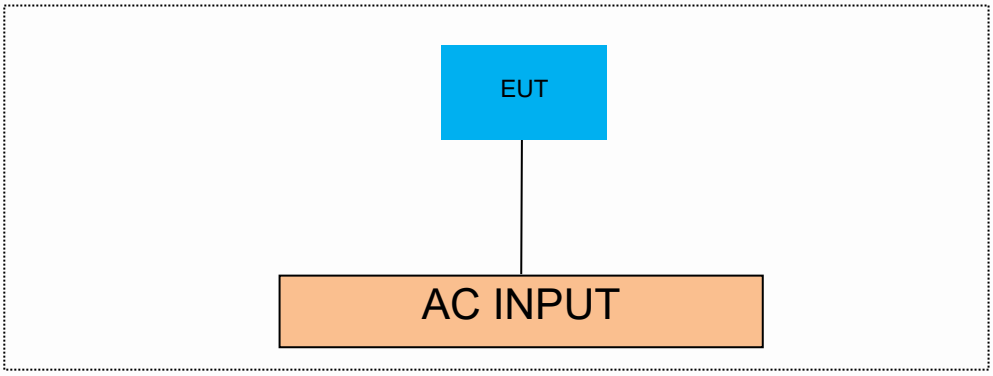


## 7.5 SUPPORT EQUIPMENT

| EUT Cable List and Details | | | |
|---|---|---|---|
| Cable Description | Length (m) | Shielded/Unshielded | With / Without Ferrite |
| / | / | / | / |

| Auxiliary Cable List and Details | | | |
|---|---|---|---|
| Cable Description | Length (m) | Shielded/Unshielded | With / Without Ferrite |
| USB line | 0.5 | / | / |

| Auxiliary Equipment List and Details | | | |
|---|---|---|---|
| Description | Manufacturer | Model | Serial Number |
| Notebook | Lenovo | E46L | 11S168003748Z0LR06E0HG |
| Adaptor | Apple | / | / |
| / | / | / | |

***Notes:***

1. *All the equipment/cables were placed in the worst-case configuration to maximize the emission during the test.*
2. *Grounding was established in accordance with the manufacturer's requirements and conditions for the intended use.*

# 8 FREQUENCY HOPPING SYSTEM REQUIREMENTS

## 8.1 Standard Applicable

According to FCC Part 15.247(a)(1), The system shall hop to channel frequencies that are selected at the system hopping rate from a pseudo randomly ordered list of hopping frequencies. Each frequency must be used equally on the average by each transmitter. The system receivers shall have input bandwidths that match the hopping channel bandwidths of their corresponding transmitters and shall shift frequencies in synchronization with the transmitted signals.

(g) Frequency hopping spread spectrum systems are not required to employ all available hopping channels during each transmission. However, the system, consisting of both the transmitter and the receiver, must be designed to comply with all of the regulations in this section should the transmitter be presented with a continuous data (or information) stream. In addition, a system employing short transmission bursts must comply with the definition of a frequency hopping system and must distribute its transmissions over the minimum number of hopping channels specified in this section.

(h) The incorporation of intelligence within a frequency hopping spread spectrum system that permits the system to recognize other users within the spectrum band so that it individually and independently chooses and adapts its hopsets to avoid hopping on occupied channels is permitted. The coordination of frequency hopping systems in any other manner for the express purpose of avoiding the simultaneous occupancy of individual hopping frequencies by multiple transmitters is not permitted.

## 8.2 EUT Pseudorandom Frequency Hopping Sequence

The channel is represented by a pseudo-random hopping sequence hopping through the 79 RF channels. The hopping sequence is unique for the piconet and is determined by the Bluetooth device address of the master; the phase in the hopping sequence is determined by the Bluetooth clock of the master.The channel is divide into time slots where each slot corresponds to an RF hop frequency. Consecutive hops correspond to different RF hop frequencies. The normal hop is 1 600 hops/s.

The pseudorandom sequence may be generated in a nine-stage shift register whose 5th and 9th stage outputs are added in a modulo-two addition stage, and the result is fed back to the input of the first stage. The sequence begins with the first ONE of 9 consecutive ONEs; i.e. the shift register is initialized with nine ones. Number of shift register stages: 9
Length of pseudo-random sequence: 29-1 = 511 bits
Longest sequence of zeros: 8 (non-inverted signal)

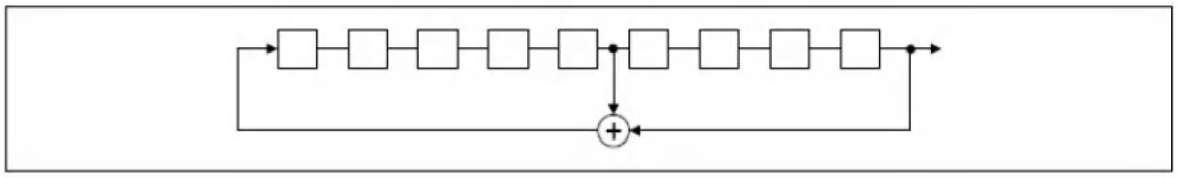

*Linear Feedback Shift Register for Generation of the PRBS sequence*

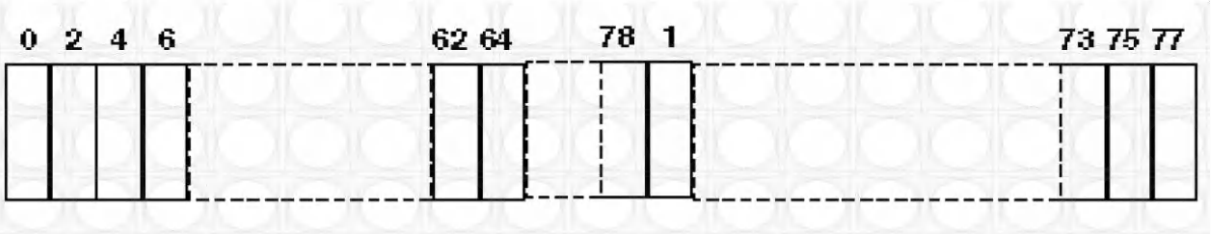

Each frequency used equally on the average by each transmitter.
The system receiver have input bandwidths that match the hopping channel bandwidths of their corresponding transmitters and shift frequencies in synchronization with the transmitted signals.

### 8.3 Equal Hopping Frequency Use

All Bluetooth units participating in the piconet are time and hop-synchronized to the channel.

Example of a 79 hopping sequence in data mode:
35, 27, 6, 44, 14, 61, 74, 32, 1, 11, 23, 2, 55, 65, 29, 3, 9, 52, 78, 58, 40, 25, 0, 7, 18, 26, 76, 60, 47, 50, 2, 5, 16, 37, 70, 63, 66, 54, 20, 13, 4, 8, 15, 21, 26, 10, 73, 77, 67, 69, 43, 24, 57, 39, 46, 72, 48, 33, 17, 31, 75, 19, 41, 62, 68, 28, 51, 66, 30, 56, 34, 59, 71, 22, 49, 64, 38, 45, 36, 42, 53
Each Frequency used equally on the average by each transmitter

### 8.4 Frequency Hopping System

This transmitter device is frequency hopping device, and complies with FCC part 15.247 rule.

This device uses Bluetooth radio which operates in 2400-2483.5 MHz band. Bluetooth uses a radio technology called frequency-hopping spread spectrum, which chops up the data being sent and transmits chunks of it on up to 79 bands (1 MHz each; centred from 2402 to 2480 MHz) in the range 2,400-2,483.5 MHz. The transmitter switches hop frequencies 1,600 times per second to assure a high degree of data security. All Bluetooth devices participating in a given piconet are synchronized to the frequency-hopping channel for the piconet. The frequency hopping sequence is determined by the master's device address and the phase of the hopping sequence (the frequency to hop at a specific time) is determined by the master's internal clock. Therefore, all slaves in a piconet must know the master's device address and must synchronize their clocks with the master's clock.

Adaptive Frequency Hopping (AFH) was introduced in the Bluetooth specification to provide an effective way for a Bluetooth radio to counteract normal interference. AFH identifies "bad" channels, where either other wireless devices are interfering with the Bluetooth signal or the Bluetooth signal is interfering with another device. The AFH- enabled Bluetooth device will then communicate with other devices within its piconet to share details of any identified bad channels. The devices will then switch to alternative available "good" channels, away from the areas of interference, thus having no impact on the bandwidth used.

# 9 TEST REQUIREMENTS

## 9.1 DTS 6DB BANDWIDTH

### 9.1.1 Applicable Standard

According to FCC Part 15.247(a)(2) and KDB 558074 D01 15.247 Meas Guidance v05r02
According to RSS-247 5.2(a)

### 9.1.2 Conformance Limit

The minimum -6 dB bandwidth shall be at least 500 kHz.

### 9.1.3 Test Configuration

Test according to clause 7.1 radio frequency test setup 1

### 9.1.4 Test Procedure

The EUT was operating in Bluetooth mode and controlled its channel. Printed out the test result from the spectrum by hard copy function.
The RF output of EUT was connected to the spectrum analyzer by RF cable and attenuator. The path loss was compensated to the results for each measurement.
Set to the maximum power setting and enable the EUT transmit continuously
Set RBW = 100 kHz.
Set the video bandwidth (VBW) =300 kHz.
Set Span=2 times OBW
Set Detector = Peak.
Set Trace mode = max hold.
Set Sweep = auto couple.
Allow the trace to stabilize.
Measure the maximum width of the emission that is constrained by the frequencies associated with the two outermost amplitude points (upper and lower frequencies) that are attenuated by 6 dB relative to the maximum level measured in the fundamental emission.
Measure and record the results in the test report.

**Test Results**

| | |
|---|---|
| Temperature: | 25˚C |
| Relative Humidity: | 45% |
| ATM Pressure: | 1011 mbar |

Note: N/A

| TestMode | Antenna | Frequency[MHz] | DTS BW [MHz] | FL[MHz] | FH[MHz] | Limit[MHz] | Verdict |
|---|---|---|---|---|---|---|---|
| BLE_1M | Ant1 | 2402 | 0.704 | 2401.656 | 2402.360 | 0.5 | PASS |
| BLE_1M | Ant1 | 2440 | 0.692 | 2439.660 | 2440.352 | 0.5 | PASS |
| BLE_1M | Ant1 | 2480 | 0.724 | 2479.652 | 2480.376 | 0.5 | PASS |
| BLE_2M | Ant1 | 2402 | 1.392 | 2401.320 | 2402.712 | 0.5 | PASS |
| BLE_2M | Ant1 | 2440 | 1.372 | 2439.324 | 2440.696 | 0.5 | PASS |
| BLE_2M | Ant1 | 2480 | 1.392 | 2479.312 | 2480.704 | 0.5 | PASS |

BLE_1M-Ant1-2402-PASS

BLE_1M-Ant1-2440-PASS

BLE_1M-Ant1-2480-PASS

BLE_2M-Ant1-2402-PASS

BLE_2M-Ant1-2440-PASS

BLE_2M-Ant1-2480-PASS

## 9.2 DTS 99% BANDWIDTH

### 9.2.1 Applicable Standard

According to RSS-Gen 6.7 and KDB 558074 D01 DTS Meas Guidance v05r02

### 9.2.2 Test Configuration

Test according to clause 7.1 radio frequency test setup 1

### 9.2.3 Test Procedure

The EUT was operating in Bluetooth mode and controlled its channel. Printed out the test result from the spectrum by hard copy function.
The RF output of EUT was connected to the spectrum analyzer by RF cable and attenuator. The path loss was compensated to the results for each measurement.
Set to the maximum power setting and enable the EUT transmit continuously
Set RBW = 1%-5% OBW(43 KHz).
Set the video bandwidth (VBW) =130 kHz.
Set Span=4 MHz
Set Detector = Peak.
Set Trace mode = max hold.
Set Sweep = auto couple.
Allow the trace to stabilize.
Use the 99 % power bandwidth function of the instrument
Measure the maximum width of the emission.
Measure and record the results in the test report.

### 9.2.4 Test Results

| | |
|---|---|
| Temperature: | 25˚C |
| Relative Humidity: | 45% |
| ATM Pressure: | 1011 mbar |

Note: N/A

| TestMode | Antenna | Frequency[MHz] | OCB [MHz] | FL[MHz] | FH[MHz] | Limit[MHz] | Verdict |
|---|---|---|---|---|---|---|---|
| BLE_1M | Ant1 | 2402 | 1.2045 | 2401.3962 | 2402.6007 | --- | --- |
| BLE_1M | Ant1 | 2440 | 1.1141 | 2439.4456 | 2440.5597 | --- | --- |
| BLE_1M | Ant1 | 2480 | 1.1279 | 2479.4381 | 2480.5660 | --- | --- |
| BLE_2M | Ant1 | 2402 | 2.2398 | 2400.8781 | 2403.1179 | --- | --- |
| BLE_2M | Ant1 | 2440 | 2.1802 | 2438.9065 | 2441.0867 | --- | --- |
| BLE_2M | Ant1 | 2480 | 2.1687 | 2478.9179 | 2481.0866 | --- | --- |

BLE_1M-Ant1-2402

BLE_1M-Ant1-2440

BLE_1M-Ant1-2480

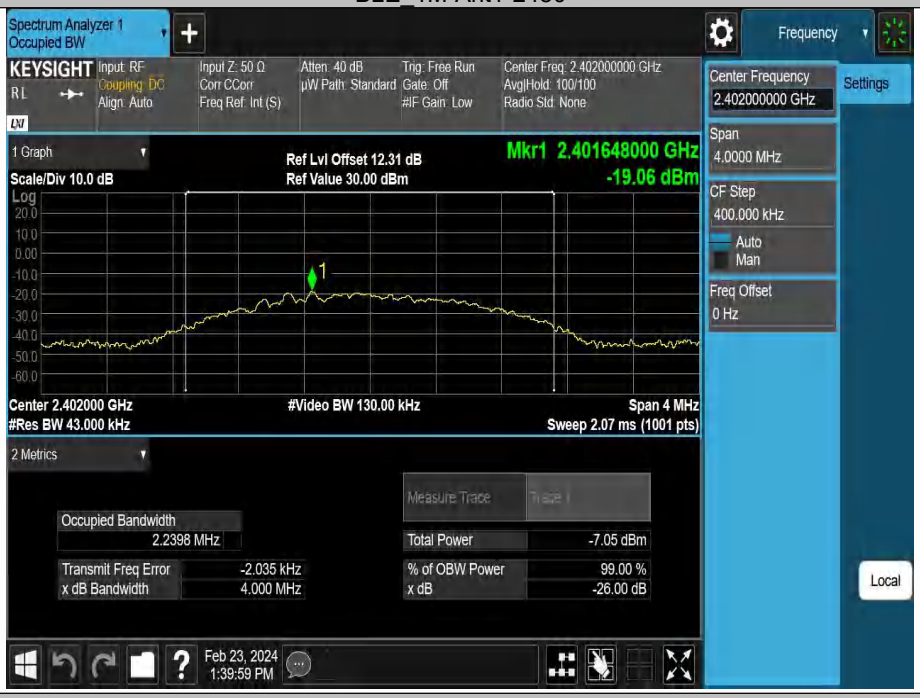


BLE_2M-Ant1-2402

BLE_2M-Ant1-2440

BLE_2M-Ant1-2480

## 9.3 MAXIMUM PEAK CONDUCTED OUTPUT POWER

### 9.3.1 Applicable Standard

According to FCC Part 15.247(b)(3) and KDB 558074 D01 15.247 Meas Guidance v05r02
According to RSS-247 5.4(d) and RSS-Gen 6.12

### 9.3.2 Conformance Limit

The maximum peak conducted output power of the intentional radiator for systems using digital modulation in the 2400 - 2483.5 MHz bands shall not exceed: 1 Watt (30 dBm).

### 9.3.3 Test Configuration

Test according to clause 7.1 radio frequency test setup 1

### 9.3.4 Test Procedure

As an alternative to a peak power measurement, compliance with the one Watt limit can be based on a measurement of the maximum conducted output power. For smart system, Maximum Conducted Output Power is defined as the total transmit power delivered to all antennas and antenna elements averaged across all symbols in the signaling alphabet when the transmitter is operating at its maximum power control level. Power must be summed across all antennas and antenna elements. If multiple modes of operation are possible (e.g., alternative modulation methods), the maximum conducted output power is the highest total transmit power occurring in any mode.
Set the RBW ≧DTS bandwidth(about 2MHz).
Set VBW =3*RBW(about 6MHz)
Set the span ≧3*RBW
Set Sweep time = auto couple.
Set Detector = peak.
Set Trace mode = max hold.
Allow trace to fully stabilize. Use peak marker function to determine the peak amplitude level.

Conducted output power limit specified in paragraph (b) of this section is based on the use of antennas with directional gains that do not exceed 6 dBi. If transmitting antennas of directional gain greater than 6 dBi are used, the conducted output power from the intentional radiator shall be reduced below the stated values in paragraphs (b)(3) of this section, as appropriate, by the amount in dB that the directional gain of the antenna exceeds 6 dBi.

### 9.3.5 Test Results

| | |
|---|---|
| Temperature: | 25 ˚C |
| Relative Humidity: | 45% |
| ATM Pressure: | 1011 mbar |

Note: N/A

| TestMode | Antenna | Frequency[MHz] | Conducted Peak Powert[dBm] | Conducted Limit[dBm] | EIRP[dBm] | EIRP Limit[dBm] | Verdict |
|---|---|---|---|---|---|---|---|
| BLE_1M | Ant1 | 2402 | -11.44 | ≤30 | -10.31 | ≤36 | PASS |
| BLE_1M | Ant1 | 2440 | -10.05 | ≤30 | -8.92 | ≤36 | PASS |
| BLE_1M | Ant1 | 2480 | -10.04 | ≤30 | -8.91 | ≤36 | PASS |
| BLE_2M | Ant1 | 2402 | -11.55 | ≤30 | -10.42 | ≤36 | PASS |
| BLE_2M | Ant1 | 2440 | -10.11 | ≤30 | -8.98 | ≤36 | PASS |
| BLE_2M | Ant1 | 2480 | -10.11 | ≤30 | -8.98 | ≤36 | PASS |

BLE_1M-Ant1-2402-PASS

BLE_1M-Ant1-2440-PASS

BLE_1M-Ant1-2480-PASS

BLE_2M-Ant1-2402-PASS

BLE_2M-Ant1-2440-PASS

BLE_2M-Ant1-2480-PASS

## 9.4 MAXIMUM POWER SPECTRAL DENSITY

### 9.4.1 Applicable Standard

According to FCC Part 15.247(e) and KDB 558074 D01 15.247 Meas Guidance v05r02
According to RSS-247 5.2(b) and RSS-Gen 6.12

### 9.4.2 Conformance Limit

The transmitter power spectral density conducted from the transmitter to the antenna shall not be greater than 8 dBm in any 3 kHz band during any time interval of continuous transmission.

### 9.4.3 Test Configuration

Test according to clause 7.1 radio frequency test setup 1

### 9.4.4 Test Procedure

This procedure shall be used if maximum peak conducted output power was used to demonstrate compliance
The transmitter output (antenna port) was connected to the spectrum analyzer
Set analyzer center frequency to DTS channel center frequency.
Set the span to 1.5 times the DTS bandwidth.
Set the RBW to: 3 kHz
Set the VBW to: 10 kHz.
Set Detector = peak.
Set Sweep time = auto couple.
Set Trace mode = max hold.
Allow trace to fully stabilize.
Use the peak marker function to determine the maximum amplitude level within the RBW.

### 9.4.5 Test Results

| | |
|---|---|
| Temperature: | 25 ˚C |
| Relative Humidity: | 45% |
| ATM Pressure: | 1011 mbar |

Note: N/A

| TestMode | Antenna | Frequency[MHz] | Result[dBm/3kHz] | Limit[dBm/3kHz] | Verdict |
|---|---|---|---|---|---|
| BLE_1M | Ant1 | 2402 | -30.03 | ≤8.00 | PASS |
| BLE_1M | Ant1 | 2440 | -28.35 | ≤8.00 | PASS |
| BLE_1M | Ant1 | 2480 | -27.55 | ≤8.00 | PASS |
| BLE_2M | Ant1 | 2402 | -35.37 | ≤8.00 | PASS |
| BLE_2M | Ant1 | 2440 | -33.44 | ≤8.00 | PASS |
| BLE_2M | Ant1 | 2480 | -33.46 | ≤8.00 | PASS |

BLE_1M-Ant1-2402-PASS

BLE_1M-Ant1-2440-PASS

BLE_1M-Ant1-2480-PASS

BLE_2M-Ant1-2402-PASS

BLE_2M-Ant1-2440-PASS

BLE_2M-Ant1-2480-PASS

## 9.5 UNWANTED EMISSIONS IN NON-RESTRICTED FREQUENCY BANDS

### 9.5.1 Applicable Standard

According to FCC Part 15.247(d) and KDB 558074 D01 15.247 Meas Guidance v05r02
According to RSS-247 5.5

### 9.5.2 Conformance Limit

In any 100 kHz bandwidth outside the frequency band in which the spread spectrum or digitally modulated intentional radiator is operating, the radio frequency power that is produced by the intentional radiator shall be at least 20 dB below that in the 100 kHz bandwidth within the band that contains the highest level of the desired power, based on either an RF conducted or a radiated measurement, provided the transmitter demonstrates compliance with the peak conducted power limits. If the transmitter complies with the conducted power limits based on the use of RMS averaging over a time interval, as permitted under paragraph (b)(3) of this section, the attenuation required under this paragraph shall be 30 dB instead of 20 dB.

### 9.5.3 Test Configuration

Test according to clause 7.1 radio frequency test setup 1

### 9.5.4 Test Procedure

The transmitter output (antenna port) was connected to the spectrum analyzer

- **Reference level measurement**

Establish a reference level by using the following procedure:
Set instrument center frequency to DTS channel center frequency.
Set the span to = 1.5 times the DTS bandwidth.
Set the RBW = 100 kHz.
Set the VBW ≥ 3 x RBW.
Set Detector = peak.
Set Sweep time = auto couple.
Set Trace mode = max hold.
Allow trace to fully stabilize.
Use the peak marker function to determine the maximum PSD level.
Note that the channel found to contain the maximum PSD level can be used to establish the reference level.

- **Band-edge measurement**

Use the following spectrum analyzer settings:
Span = wide enough to capture the peak level of the emission operating on the channel closest to the band-edge, as well as any modulation products which fall outside of the authorized band of operation
Set RBW ≥ 1% of the span=100kHz  Set VBW ≥ 3 x RBW
Set Sweep = auto  Set Detector function = peak  Set Trace = max hold
Allow the trace to stabilize.  Set the marker on the emission at the bandedge, or on the highest modulation product outside of the band, if this level is greater than that at the bandedge.  Enable the marker-delta function, then use the marker-to-peak function to move the marker to the peak of the in-band emission.  The marker-delta value now displayed must comply with the limit specified in this Section.

- **Emission level measurement**

Set the center frequency and span to encompass frequency range to be measured.
Set the RBW = 100 kHz.
Set the VBW =300 kHz.
Set Detector = peak
Sweep time = auto couple.
Trace mode = max hold.
Allow trace to fully stabilize.
Use the peak marker function to determine the maximum amplitude level.
Ensure that the amplitude of all unwanted emissions outside of the authorized frequency band (excluding restricted frequency bands) are attenuated by at least the minimum requirements . Report the three highest emissions relative to the limit.

### 9.5.5 Test Results

| | |
|---|---|
| Temperature: | 25 ˚C |
| Relative Humidity: | 45% |
| ATM Pressure: | 1011 mbar |

Note: N/A

Band edge

| TestMode | Antenna | ChName | Frequency[MHz] | RefLevel[dBm] | Result[dBm] | Limit[dBm] | Verdict |
|---|---|---|---|---|---|---|---|
| BLE_1M | Ant1 | Low | 2402 | -13.85 | -48.49 | ≤-33.85 | PASS |
| BLE_1M | Ant1 | High | 2480 | -12.88 | -47.47 | ≤-32.88 | PASS |
| BLE_2M | Ant1 | Low | 2402 | -16.43 | -46.14 | ≤-36.43 | PASS |
| BLE_2M | Ant1 | High | 2480 | -14.54 | -48.35 | ≤-34.54 | PASS |

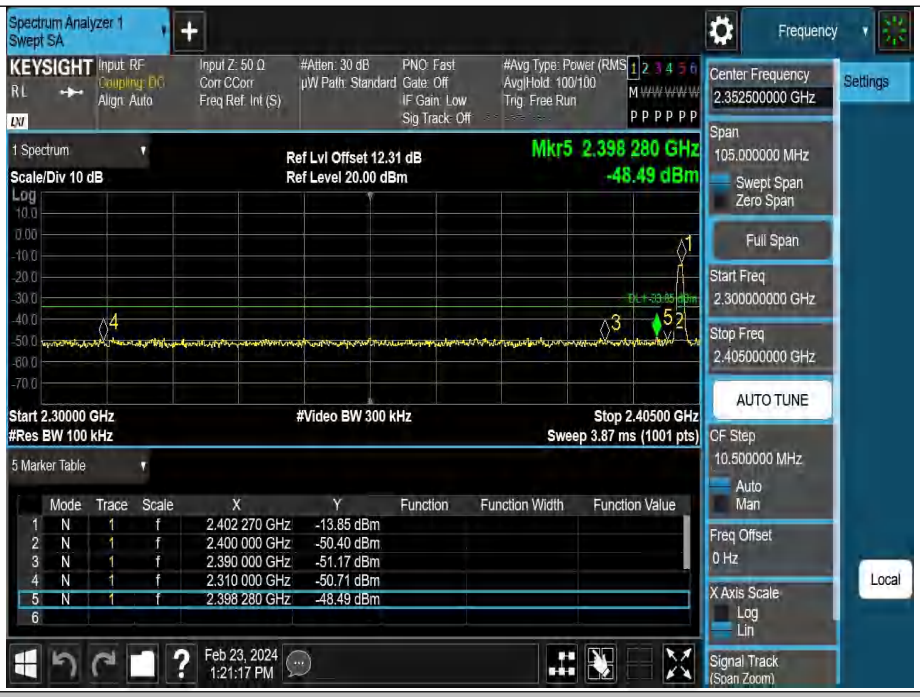


BLE_1M-Ant1-2402-PASS

BLE_1M-Ant1-2480-PASS

BLE_2M-Ant1-2402-PASS

BLE_2M-Ant1-2480-PASS

Conducted Spurious Emission

| TestMode | Antenna | Frequency[MHz] | FreqRange [MHz] | RefLevel [dBm] | Result[dBm] | Limit[dBm] | Verdict |
|---|---|---|---|---|---|---|---|
| BLE_1M | Ant1 | 2402 | 0~Reference | -14.76 | -14.76 | --- | PASS |
| BLE_1M | Ant1 | 2402 | 30~1000 | -14.76 | -41.99 | ≤-34.76 | PASS |
| BLE_1M | Ant1 | 2402 | 1000~26500 | -14.76 | -49.21 | ≤-34.76 | PASS |
| BLE_1M | Ant1 | 2440 | 0~Reference | -12.98 | -12.98 | --- | PASS |
| BLE_1M | Ant1 | 2440 | 30~1000 | -12.98 | -41.47 | ≤-32.98 | PASS |
| BLE_1M | Ant1 | 2440 | 1000~26500 | -12.98 | -46.22 | ≤-32.98 | PASS |
| BLE_1M | Ant1 | 2480 | 0~Reference | -12.35 | -12.35 | --- | PASS |
| BLE_1M | Ant1 | 2480 | 30~1000 | -12.35 | -39.75 | ≤-32.35 | PASS |
| BLE_1M | Ant1 | 2480 | 1000~26500 | -12.35 | -43.71 | ≤-32.35 | PASS |
| BLE_2M | Ant1 | 2402 | 0~Reference | -16.56 | -16.56 | --- | PASS |
| BLE_2M | Ant1 | 2402 | 30~1000 | -16.56 | -42.55 | ≤-36.56 | PASS |
| BLE_2M | Ant1 | 2402 | 1000~26500 | -16.56 | -48.95 | ≤-36.56 | PASS |
| BLE_2M | Ant1 | 2440 | 0~Reference | -14.69 | -14.69 | --- | PASS |
| BLE_2M | Ant1 | 2440 | 30~1000 | -14.69 | -42.52 | ≤-34.69 | PASS |
| BLE_2M | Ant1 | 2440 | 1000~26500 | -14.69 | -47.47 | ≤-34.69 | PASS |
| BLE_2M | Ant1 | 2480 | 0~Reference | -14.76 | -14.76 | --- | PASS |
| BLE_2M | Ant1 | 2480 | 30~1000 | -14.76 | -42.01 | ≤-34.76 | PASS |
| BLE_2M | Ant1 | 2480 | 1000~26500 | -14.76 | -45.93 | ≤-34.76 | PASS |

BLE_1M-Ant1-2402-0~Reference-PASS

BLE_1M-Ant1-2402-30~1000-PASS

BLE_1M-Ant1-2402-1000~26500-PASS

BLE_1M-Ant1-2440-0~Reference-PASS

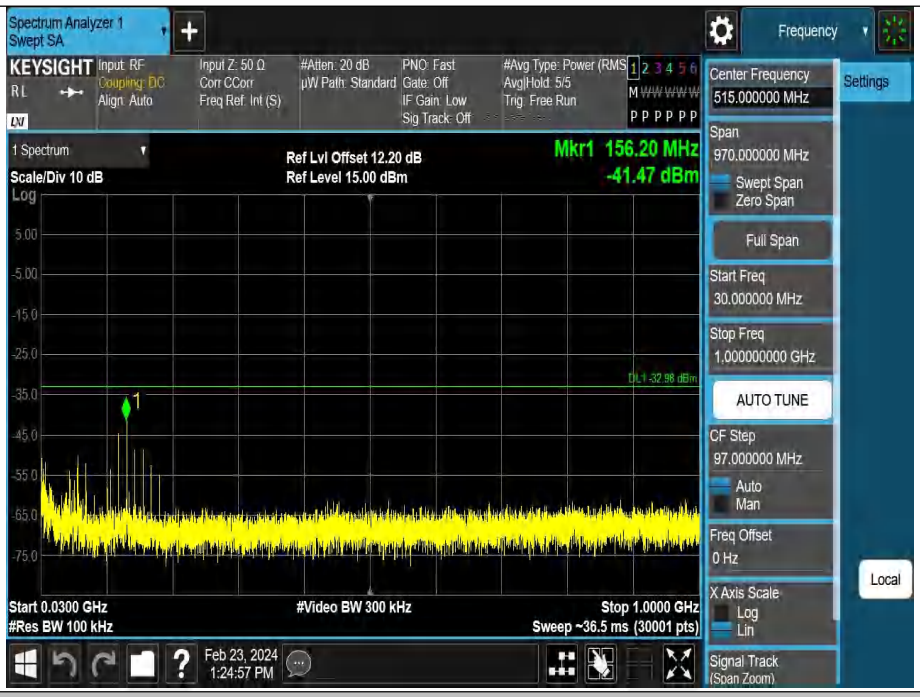


BLE_1M-Ant1-2440-30~1000-PASS

BLE_1M-Ant1-2440-1000~26500-PASS

BLE_1M-Ant1-2480-0~Reference-PASS

BLE_1M-Ant1-2480-30~1000-PASS

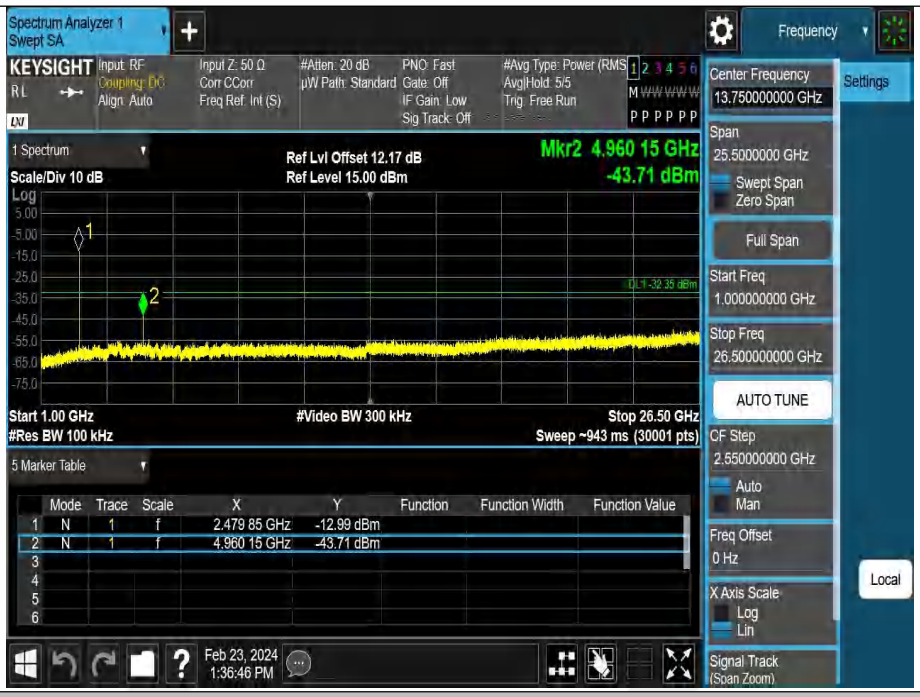


BLE_1M-Ant1-2480-1000~26500-PASS

BLE_2M-Ant1-2402-0~Reference-PASS

BLE_2M-Ant1-2402-30~1000-PASS

BLE_2M-Ant1-2402-1000~26500-PASS

BLE_2M-Ant1-2440-0~Reference-PASS

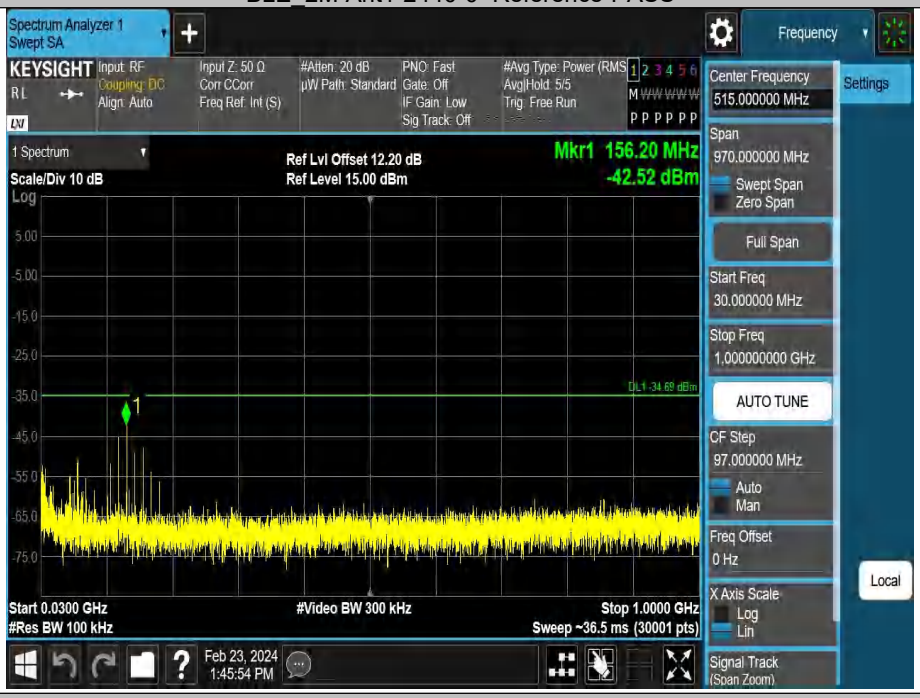


BLE_2M-Ant1-2440-30~1000-PASS

BLE_2M-Ant1-2440-1000~26500-PASS

BLE_2M-Ant1-2480-0~Reference-PASS

BLE_2M-Ant1-2480-30~1000-PASS

BLE_2M-Ant1-2480-1000~26500-PASS

## 9.6 RADIATED SPURIOUS EMISSION

### 9.6.1 Applicable Standard

According to FCC Part 15.247(d), 15.205, 15.209 and KDB 558074 D01 15.247 Meas Guidance v05r02
According to IC RSS-Gen and RSS-247

### 9.6.2 Conformance Limit

According to FCC Part 15.247(d): radiated emissions which fall in the restricted bands, as defined in §15.205(a), must also comply with the radiated emission limits specified in §15.209(a) (see §15.205(c)).
According to FCC Part15.205, Restricted bands

| MHz | MHz | MHz | GHz |
|---|---|---|---|
| 0.090-0.110 | 16.42-16.423 | 399.9-410 | 4.5-5.15 |
| 10.495-0.505 | 16.69475-16.69525 | 608-614 | 5.35-5.46 |
| 2.1735-2.1905 | 16.80425-16.80475 | 960-1240 | 7.25-7.75 |
| 4.125-4.128 | 25.5-25.67 | 1300-1427 | 8.025-8.5 |
| 4.17725-4.17775 | 37.5-38.25 | 1435-1626.5 | 9.0-9.2 |
| 4.20725-4.20775 | 73-74.6 | 1645.5-1646.5 | 9.3-9.5 |
| 6.215-6.218 | 74.8-75.2 | 1660-1710 | 10.6-12.7 |
| 6.26775-6.26825 | 123-138 | 2200-2300 | 14.47-14.5 |
| 8.291-8.294 | 149.9-150.05 | 2310-2390 | 15.35-16.2 |
| 8.362-8.366 | 156.52475-156.52525 | 2483.5-2500 | 17.7-21.4 |
| 8.37625-8.38675 | 156.7-156.9 | 2690-2900 | 22.01-23.12 |
| 8.41425-8.41475 | 162.0125-167.17 | 3260-3267 | 23.6-24.0 |
| 12.29-12.293 | 167.72-173.2 | 3332-3339 | 31.2-31.8 |
| 12.51975-12.52025 | 240-285 | 3345.8-3358 | 36.43-36.5 |
| 12.57675-12.57725 | 322-335.4 | 3600-4400 | (2) |
| 13.36-13.41 | | | |

According to FCC Part15.205, the level of any transmitter spurious emission in Restricted bands shall not exceed the level of the emission specified in the following table

| Restricted Frequency(MHz) | Field Strength (μV/m) | Field Strength (dBμV/m) | Measurement Distance |
|---|---|---|---|
| 0.009-0.490 | 2400/F(KHz) | 20 log (uV/m) | 300 |
| 0.490-1.705 | 24000/F(KHz) | 20 log (uV/m) | 30 |
| 1.705-30 | 30 | 29.5 | 30 |
| 30-88 | 100 | 40 | 3 |
| 88-216 | 150 | 43.5 | 3 |
| 216-960 | 200 | 46 | 3 |
| Above 960 | 500 | 54 | 3 |

### 9.6.3 Test Configuration

Test according to clause 7.2 radio frequency test setup 2

### 9.6.4 Test Procedure

This test is required for any spurious emission that falls in a Restricted Band, as defined in Section 15.205. It must be performed with the highest gain of each type of antenna proposed for use with the EUT. Use the following spectrum analyzer settings:
The EUT was placed on a turn table which is 0.8m above ground plane.
Maximum procedure was performed on the highest emissions to ensure EUT compliance.
Span = wide enough to fully capture the emission being measured
RBW = 1 MHz for f ≥ 1 GHz(1GHz to 25GHz), 100 kHz for f < 1 GHz(30MHz to 1GHz)
VBW ≥ RBW
Sweep = auto
Detector function = peak

Trace = max hold
Follow the guidelines in ANSI C63.10-2013 with respect to maximizing the emission by rotating the EUT, measuring the emission while the EUT is situated in three orthogonal planes (if appropriate), adjusting the measurement antenna height and polarization, etc. A pre-amp and a high pass filter are required for this test, in order to provide the measuring system with sufficient sensitivity. Allow the trace to stabilize. The peak reading of the emission, after being corrected by the antenna factor, cable loss, pre-amp gain, etc., is the peak field strength, which must comply with the limit specified in Section 15.35(b). Submit this data.
Now set the VBW to 10 Hz, while maintaining all of the other instrument settings. This peak level, once corrected, must comply with the limit specified in Section 15.209. If the dwell time per channel of the hopping signal is less than 100 ms, then the reading obtained with the 10 Hz VBW may be further adjusted by a “duty cycle correction factor”, derived from 20log(dwell time/100 ms), in an effort to demonstrate compliance with the 15.209 limit. Submit this data.
Repeat above procedures until all frequency measured was complete.

### 9.6.5 Test Results

| | |
|---|---|
| Temperature: | 22° C |
| Relative Humidity: | 43% |
| ATM Pressure: | 1011 mbar |

■ Spurious Emission below 30MHz (9KHz to 30MHz)

| Freq. (MHz) | Ant.Pol. | Emission Level(dBuV/m) | | Limit 3m(dBuV/m) | | Over(dB) | |
|---|---|---|---|---|---|---|---|
| | H/V | PK | AV | PK | AV | PK | AV |
| -- | -- | -- | -- | -- | -- | -- | -- |

Note: the amplitude of spurious emission that is attenuated by more than 20dB below the permissible limit has no need to be reported.
Distance extrapolation factor =40log(Specific distance/ test distance)( dB);
Limit line=Specific limits(dBuV) + distance extrapolation factor

■ Spurious Emission Above 1GHz (1GHz to 25GHz)

All the antenna(Antenna 1) and modes(BLE_1M, BLE_2M) mode have been tested, and the worst(Antenna 1, BLE_1M) result recorded was report as below:

Test mode: BLE_1M Frequency: Channel 0: 2402MHz

| Freq. (MHz) | Ant.Pol. | Emission Level(dBuV/m) | | Limit 3m(dBuV/m) | | Over(dB) | |
|---|---|---|---|---|---|---|---|
| | H/V | PK | AV | PK | AV | PK | AV |
| 10487.26 | V | 55.50 | 41.68 | 74.00 | 54.00 | -18.50 | -12.32 |
| 13505.11 | V | 55.80 | 41.98 | 74.00 | 54.00 | -18.20 | -12.02 |
| 14908.32 | V | 55.47 | 41.63 | 74.00 | 54.00 | -18.53 | -12.37 |
| 10487.26 | H | 56.59 | 42.73 | 74.00 | 54.00 | -17.41 | -11.27 |
| 12476.82 | H | 56.43 | 42.59 | 74.00 | 54.00 | -17.57 | -11.41 |
| 14916.94 | H | 56.16 | 42.39 | 74.00 | 54.00 | -17.84 | -11.61 |

Test mode: BLE_1M Frequency: Channel 19: 2440MHz

| Freq. (MHz) | Ant.Pol. | Emission Level(dBuV/m) | | Limit 3m(dBuV/m) | | Over(dB) | |
|---|---|---|---|---|---|---|---|
| | H/V | PK | AV | PK | AV | PK | AV |
| 11338.46 | V | 55.86 | 42.05 | 74.00 | 54.00 | -18.14 | -11.95 |
| 12647.47 | V | 55.64 | 41.80 | 74.00 | 54.00 | -18.36 | -12.20 |
| 14999.08 | V | 55.36 | 41.60 | 74.00 | 54.00 | -18.64 | -12.40 |
| 11217.85 | H | 55.13 | 41.31 | 74.00 | 54.00 | -18.87 | -12.69 |
| 13501.21 | H | 55.54 | 41.71 | 74.00 | 54.00 | -18.46 | -12.29 |
| 16011.57 | H | 54.70 | 40.88 | 74.00 | 54.00 | -19.30 | -13.12 |

Test mode: BLE_1M Frequency: Channel 39: 2480MHz

| Freq. (MHz) | Ant.Pol. | Emission Level(dBuV/m) | | Limit 3m(dBuV/m) | | Over(dB) | |
|---|---|---|---|---|---|---|---|
| | H/V | PK | AV | PK | AV | PK | AV |
| 11015.43 | V | 54.55 | 40.68 | 74.00 | 54.00 | -19.45 | -13.32 |
| 12448.00 | V | 54.43 | 40.57 | 74.00 | 54.00 | -19.57 | -13.43 |
| 14321.23 | V | 54.95 | 41.13 | 74.00 | 54.00 | -19.05 | -12.87 |
| 10983.64 | H | 54.32 | 40.48 | 74.00 | 54.00 | -19.68 | -13.52 |
| 12842.71 | H | 55.30 | 41.51 | 74.00 | 54.00 | -18.70 | -12.49 |
| 15323.35 | H | 54.48 | 40.67 | 74.00 | 54.00 | -19.52 | -13.33 |

**Note:** (1) All Readings are Peak Value (VBW=3MHz) and Average Value (VBW=10Hz).
(2) Emission Level= Reading Level+Correct Factor.
(3) Correct Factor= Ant_F + Cab_L – Preamp
(4) The reading of emissions are attenuated more than 20dB below the permissible limits or the field strength is too small to be measured.

■ Spurious Emission in Restricted Band 2310-2390MHz and 2483.5-2500MHz

All the antenna(Antenna 1) and modes(BLE_1M, BLE_2M) mode have been tested, and the worst(Antenna 1, BLE_1M) result recorded was report as below:

| Test mode: | BLE_1M | Frequency: | Channel 0: 2402MHz | | |
|---|---|---|---|---|---|
| Frequency (MHz) | Polarity | PK(dBuV/m) (VBW=3MHz) | Limit 3m (dBuV/m) | AV(dBuV/m) (VBW=10Hz) | Limit 3m (dBuV/m) |
| 2389.00 | H | 42.62 | 74.00 | 30.41 | 54.00 |
| 2386.00 | V | 42.58 | 74.00 | 30.02 | 54.00 |

| Test mode: | BLE_1M | Frequency: | Channel 39: 2480MHz | | |
|---|---|---|---|---|---|
| Frequency (MHz) | Polarity | PK(dBuV/m) (VBW=3MHz) | Limit 3m (dBuV/m) | AV(dBuV/m) (VBW=10Hz) | Limit 3m (dBuV/m) |
| 2486.37 | H | 42.84 | 74.00 | 29.43 | 54.00 |
| 2484.73 | V | 42.47 | 74.00 | 30.10 | 54.00 |

**Note:** (1) All Readings are Peak Value (VBW=3MHz) and Average Value (VBW=10Hz).
(2) Emission Level= Reading Level+Correct Factor.
(3) Correct Factor= Ant_F + Cab_L - Preamp
(4) The reading of emissions are attenuated more than 20dB below the permissible limits or the field strength is too small to be measured.

| Test Model | Spurious Emission in Restricted Band 2310-2390MHz | | |
|---|---|---|---|
| | Channel 0: 2402MHz | BLE_1M | H |

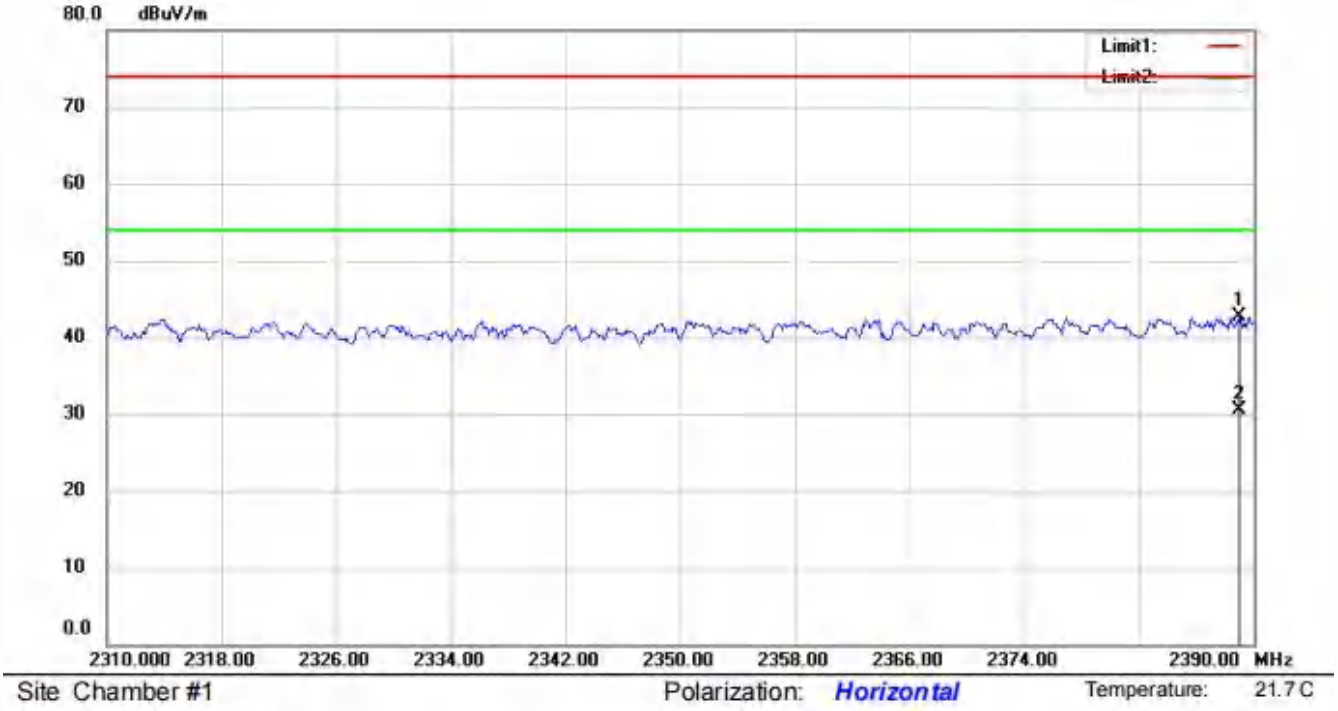


| Test Model | Spurious Emission in Restricted Band 2310-2390MHz | | |
|---|---|---|---|
| | Channel 0: 2402MHz | BLE_1M | V |

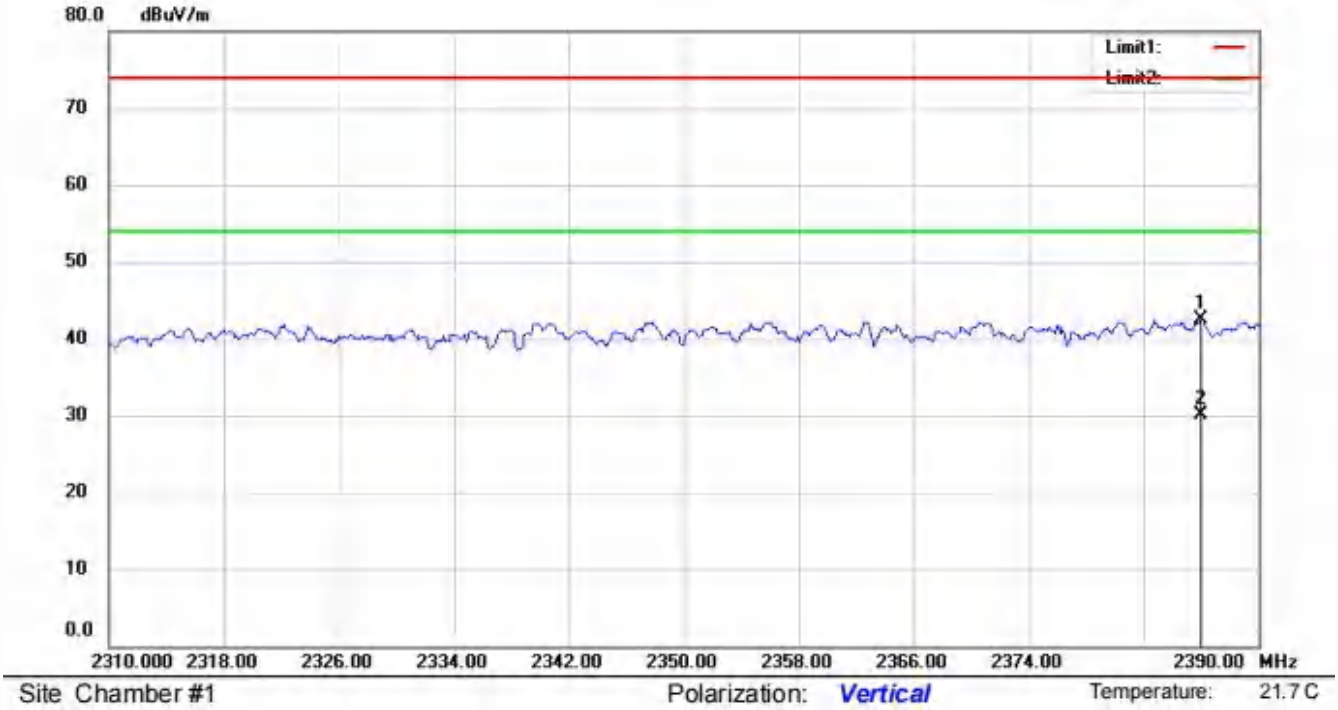

| Test Model | Spurious Emission in Restricted Band 2483.5-2500MHz | | |
|---|---|---|---|
| | Channel 39: 2480MHz | BLE_1M | H |

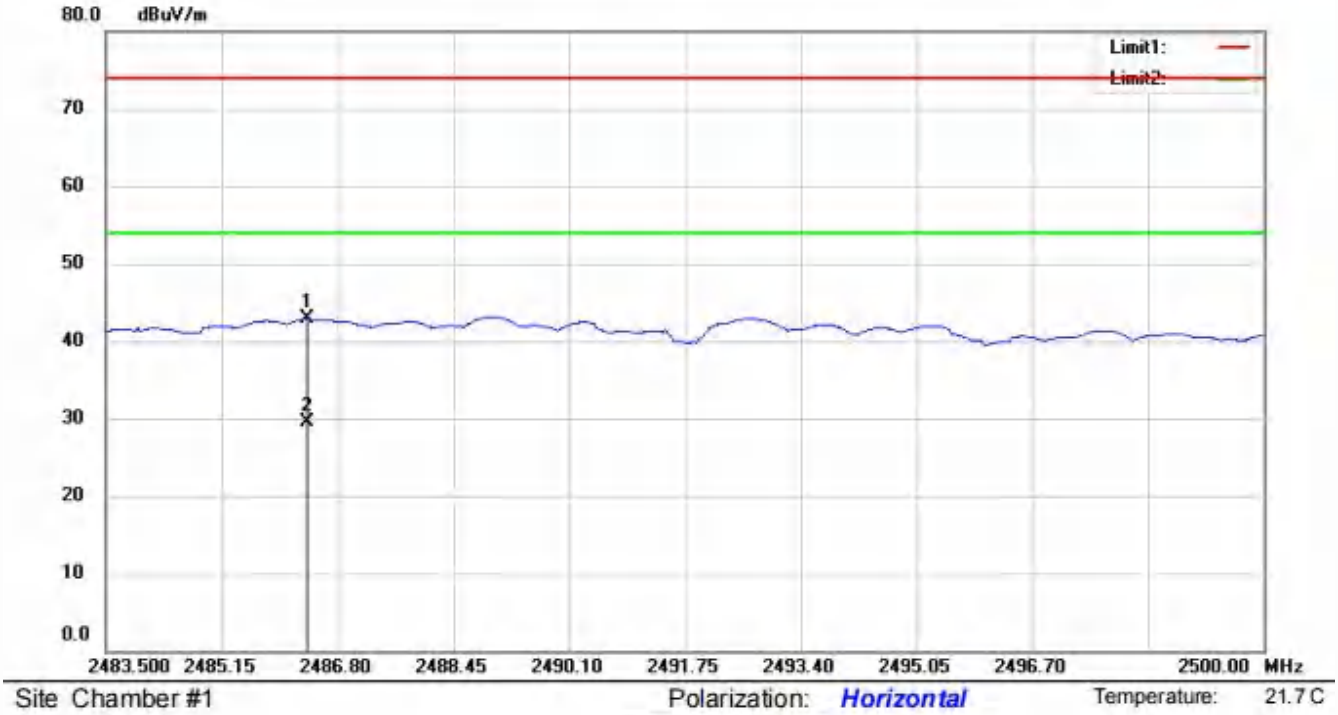


| Test Model | Spurious Emission in Restricted Band 2483.5-2500MHz | | |
|---|---|---|---|
| | Channel 39: 2480MHz | BLE_1M | V |

■ Spurious Emission below 1GHz (30MHz to 1GHz)

All the antenna(Antenna 1) and modes(BLE_1M, BLE_2M) mode have been tested, and the worst(Antenna 1, BLE_1M) result recorded was report as below:

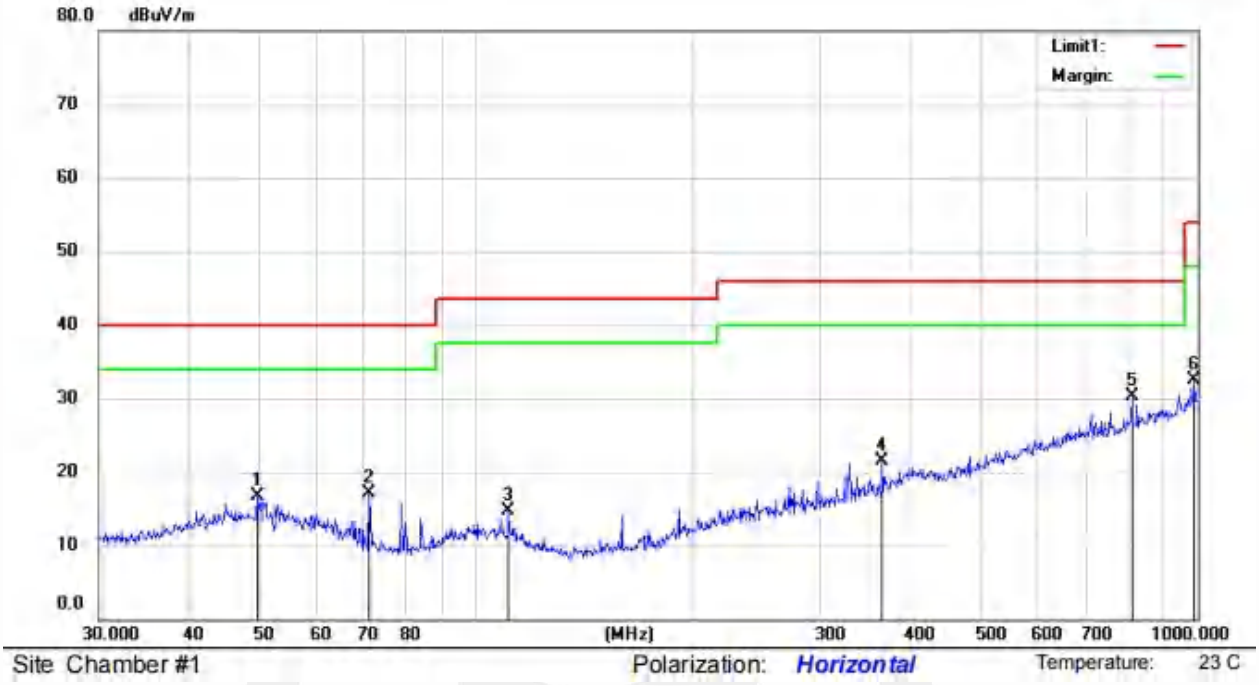


| No. | Mk. | Freq. | Reading Level | Ant. Factor | Pre Amp Gain | Cable loss | Measure-ment | Limit | Over | | Hl | Degree | |
|---|---|---|---|---|---|---|---|---|---|---|---|---|---|
| | | MHz | dBuV | dB/m | dB | dB | dBuV/m | dBuV/m | dB | Detector | cm | deg. | Comment |
| 1 | | 49.7066 | 32.42 | 13.99 | 30.48 | 0.78 | 16.71 | 40.00 | -23.29 | QP | | | |
| 2 | | 71.0803 | 37.01 | 9.6 | 30.56 | 1.1 | 17.15 | 40.00 | -22.85 | QP | | | |
| 3 | | 110.9570 | 33.10 | 11.33 | 30.83 | 1.16 | 14.76 | 43.50 | -28.74 | QP | | | |
| 4 | | 365.5390 | 33.06 | 15.4 | 29.82 | 2.78 | 21.42 | 46.00 | -24.58 | QP | | | |
| 5 | * | 810.2653 | 34.80 | 21.82 | 30.21 | 3.82 | 30.23 | 46.00 | -15.77 | QP | | | |
| 6 | | 989.5354 | 34.48 | 23.44 | 29.43 | 4.07 | 32.56 | 54.00 | -21.44 | QP | | | |

*:Maximum data x:Over limit !:over margin Operator: Ccyf

Remark:

1. Measurement (dB μ V/m) = Antenna Factor(dB) -Amp Factor(dB) +Cable Loss(dB) + Reading(dB μ V/m)
2. Over (dB) = Measurement (dB μ V/m) - Limit (dB μ V/m)

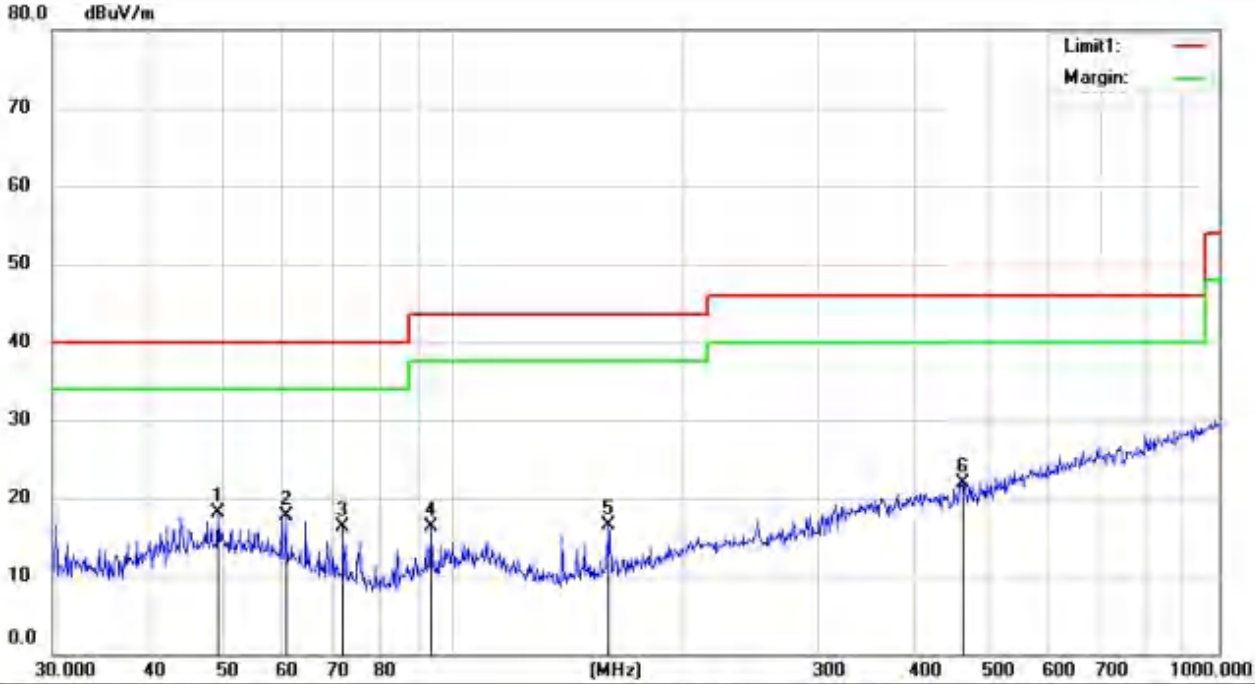


Site Chamber #1 Polarization: *Vertical* Temperature: 23 C

| No. | Mk. | Freq. | Reading Level | Ant. Factor | Pre Amp Gain | Cable loss | Measure-ment | Limit | Over | | Ht | Degree | |
|---|---|---|---|---|---|---|---|---|---|---|---|---|---|
| | | MHz | dBuV | dB/m | dB | dB | dBuV/m | dBuV/m | dB | Detector | cm | deg. | Comment |
| 1 | * | 49.3594 | 33.92 | 13.97 | 30.48 | 0.77 | 18.18 | 40.00 | -21.82 | QP | | | |
| 2 | | 60.4918 | 34.92 | 12.16 | 30.52 | 1.05 | 17.61 | 40.00 | -22.39 | QP | | | |
| 3 | | 71.8320 | 36.36 | 9.39 | 30.56 | 1.1 | 16.29 | 40.00 | -23.71 | QP | | | |
| 4 | | 93.7684 | 35.50 | 10.58 | 30.8 | 1.07 | 16.35 | 43.50 | -27.15 | QP | | | |
| 5 | | 159.7844 | 36.73 | 8.8 | 30.57 | 1.49 | 16.45 | 43.50 | -27.05 | QP | | | |
| 6 | | 463.9696 | 31.87 | 17.15 | 29.81 | 2.74 | 21.95 | 46.00 | -24.05 | QP | | | |

*:Maximum data x:Over limit !:over margin Operator: Ccyf

Remark:
1. Measurement (dB μ V/m) = Antenna Factor(dB) -Amp Factor(dB) +Cable Loss(dB) + Reading(dB μ V/m)
2. Over (dB) = Measurement (dB μ V/m) - Limit (dB μ V/m)

**CONDUCTED EMISSIONS TEST**

### 9.6.6 Applicable Standard

According to FCC Part 15.207(a)
According to IC RSS-Gen 8.8

### 9.6.7 Conformance Limit

| Conducted Emission Limit | | |
|---|---|---|
| Frequency(MHz) | Quasi-peak | Average |
| 0.15-0.5 | 66-56 | 56-46 |
| 0.5-5.0 | 56 | 46 |
| 5.0-30.0 | 60 | 50 |

Note: 1. The lower limit shall apply at the transition frequencies
2. The limit decreases in line with the logarithm of the frequency in the range of 0.15 to 0.50MHz.

### 9.6.8 Test Configuration

Test according to clause 7.3 conducted emission test setup

### 9.6.9 Test Procedure

The EUT was placed on a table which is 0.8m above ground plane.
Maximum procedure was performed on the highest emissions to ensure EUT compliance.
Repeat above procedures until all frequency measured were complete.

### 9.6.10 Test Results

N/A

## 9.7 ANTENNA APPLICATION

### 9.7.1 Antenna Requirement

| Standard | Requirement |
|---|---|
| FCC CRF Part 15.203 | An intentional radiator shall be designed to ensure that no antenna other than that furnished by the responsible party shall be used with the device. The use of a permanently attached antenna or of an antenna that uses a unique coupling to the intentional radiator shall be considered sufficient to comply with the provisions of this section. The manufacturer may design the unit so that a broken antenna can be replaced by the user, but the use of a standard antenna jack or electrical connector is prohibited. |
| FCC 47 CFR Part 15.247 (b) | If transmitting antennas of directional gain greater than 6dBi are used, the power shall be reduced by the amount in dB that the directional gain of the antenna exceeds 6dBi. |
| RSS-Gen Section 6.8 | The applicant for equipment certification shall provide a list of all antenna types that may be used with the transmitter, where applicable (i.e. for transmitters with detachable antenna), indicating the maximum permissible antenna gain (in dBi) and the required impedance for each antenna. The test report shall demonstrate the compliance of the transmitter with the limit for maximum equivalent isotropically radiated power (e.i.r.p.) specified in the applicable RSS, when the transmitter is equipped with any antenna type, selected from this list. |
| RSS-247 Section 5.4 | If the transmitter employs an antenna system that emits multiple directional beams, but does not emit multiple directional beams simultaneously, the total output power conducted to the array or arrays that comprise the device (i.e. the sum of the power supplied to all antennas, antenna elements, staves, etc., and summed across all carriers or frequency channels) shall not exceed the applicable output power limit. However, the total conducted output power shall be reduced by 1 dB below the specified limits for each 3 dB that the directional gain of the antenna/antenna array exceeds 6 dBi. The directional antenna gain shall be computed as the sum of 10 log (number of array elements or staves) plus the directional gain of the element or stave having the highest gain. |

### 9.7.2 Result

PASS.

Note:
- ☑ Antenna use a permanently attached antenna which is not replaceable.
- ☐ Not using a standard antenna jack or electrical connector for antenna replacement
- ☐ The antenna has to be professionally installed (please provide method of installation)

Please refer to the attached document Internal Photos to show the antenna connector.

Detail of Factor For Radiated Emission

| Frequency(MHz) | Ant_F(dB) | Cab_L(dB) | Preamp(dB) | Correct Factor(dB) |
|---|---|---|---|---|
| 0.009 | 20.6 | 0.03 | \ | 20.63 |
| 0.15 | 20.7 | 0.1 | \ | 20.8 |
| 1 | 20.9 | 0.15 | \ | 21.05 |
| 10 | 20.1 | 0.28 | \ | 20.38 |
| 30 | 18.8 | 0.45 | \ | 19.25 |
| | | | | |
| 30 | 11.7 | 0.62 | 27.9 | -15.58 |
| 100 | 12.5 | 1.02 | 27.8 | -14.28 |
| 300 | 12.9 | 1.91 | 27.5 | -12.69 |
| 600 | 19.2 | 2.92 | 27 | -4.88 |
| 800 | 21.1 | 3.54 | 26.6 | -1.96 |
| 1000 | 22.3 | 4.17 | 26.2 | 0.27 |
| | | | | |
| 1000 | 25.6 | 1.76 | 41.4 | -14.04 |
| 3000 | 28.9 | 3.27 | 43.2 | -11.03 |
| 5000 | 31.1 | 4.2 | 44.6 | -9.3 |
| 8000 | 36.2 | 5.95 | 44.7 | -2.55 |
| 10000 | 38.4 | 6.3 | 43.9 | 0.8 |
| 12000 | 38.5 | 7.14 | 42.3 | 3.34 |
| 15000 | 40.2 | 8.15 | 41.4 | 6.95 |
| 18000 | 45.4 | 9.02 | 41.3 | 13.12 |
| | | | | |
| 18000 | 37.9 | 1.81 | 47.9 | -8.19 |
| 21000 | 37.9 | 1.95 | 48.7 | -8.85 |
| 25000 | 39.3 | 2.01 | 42.8 | -1.49 |
| 28000 | 39.6 | 2.16 | 46.0 | -4.24 |
| 31000 | 41.2 | 2.24 | 44.5 | -1.06 |
| 34000 | 41.5 | 2.29 | 46.6 | -2.81 |
| 37000 | 43.8 | 2.30 | 46.4 | -0.3 |
| 40000 | 43.2 | 2.50 | 42.2 | 3.5 |

--------- END OF REPORT --------

# 声 明
# Statement

1. 本报告无授权批准人签字及“检验检测专用章”无效；
   This report will be void without authorized signature or special seal for testing report.

2. 未经许可本报告不得部分复制；
   This report shall not be copied partly without authorization.

3. 本报告的检测结果仅对送测样品有效，委托方对样品的代表性和资料的真实性负责；
   The test results or observations are applicable only to tested sample. Client shall be responsible for representativeness of the sample and authenticity of the material.

4. 本检测报告中检测项目标注有特殊符号则该项目不在资质认定范围内，仅作为客户委托、科研、教学或内部质量控制等目的使用；
   The observations or tests with special mark fall outside the scope of accreditation, and are only used for purpose of commission, research, training, internal quality control etc.

5. 本检测报告以实测值进行符合性判定，未考虑不确定度所带来的风险，本实验室不承担相关责任，特别约定、标准或规范中有明确规定的除外；
   The test results or observations are provided in accordance with measured value, without taking risks caused by uncertainty into account. Without explicit stipulation in special agreements, standards or regulations, EMTEK shall not assume any responsibility.

6. 对本检测报告若有异议，请于收到报告之日起 20 日内提出；
   Objections shall be raised within 20 days from the date receiving the report.