TEST REPORT

Product Name:	WIRELESS CHARGER
FCC ID:	2BE4B-LS116
Trademark:	N/A
Model Number:	LS116, LS101, LS102, LS103, LS104, LS105, LS106, LS107, LS108, LS109, LS110, LS111, LS112, LS113, LS114, LS115, LS117, LS118, LS120, LS121
Prepared For:	SHENZHEN LADSTAG TECHNOLOGY CO., LTD
Address:	1003 Room Building A, Hongshengyuan Industrial Zone, Longgang, Shenzhen, China
Manufacturer:	SHENZHEN LADSTAG TECHNOLOGY CO., LTD
Address:	1003 Room Building A, Hongshengyuan Industrial Zone, Longgang, Shenzhen, China
Prepared By:	Shenzhen CTB Testing Technology Co., Ltd.
Address:	1&2/F., Building A, No.26, Xinhe Road, Xinqiao, Xinqiao Street, Bao'an District, Shenzhen, Guangdong, China
Sample Received Date:	Jan. 25, 2024
Sample tested Date:	Jan. 25, 2024 to Feb. 01, 2024
Issue Date:	Feb. 01, 2024
Report No.:	CTB240201016RFX
Test Standards	FCC Part 15 C
Test Results	PASS
Remark:	This is wireless charger radio test report.

Compiled by:	Reviewed by:	Approved by:
Arron Liu	Bin Mei	Rita Xiao / Director

Note: If there is any objection to the inspection results in this report, please submit a written report to the company within 15 days from the date of receiving the report. The test report is effective only with both signature and specialized stamp. This result(s) shown in this report refer only to the sample(s) tested. Without written approval of Shenzhen CTB Testing Technology Co., Ltd. this report can't be reproduced except in full. The tested sample(s) and the sample information are provided by the client. "*" indicates the testing items were fulfilled by subcontracted lab. "#" indicates the items are not in CNAS accreditation scope.

TABLE OF CONTENTS

1. GENERAL INFORMATION 3
1.1. Report information 3
1.2. Measurement Uncertainty 3
1.3. Test Facility 3
1.4. Test Uncertainty 4
2. PRODUCT DESCRIPTION 5
2.1. EUT Description 5
2.2. Block Diagram of EUT Configuration 5
2.3. Test Conditions 5
2.4. DescriptionOfSupport Units (Conducted Mode) 6
3. TEST RESULTS SUMMARY 6
4. TEST EQUIPMENT USED 7
4.1. MEASUREMENT INSTRUMENTS LIST 7
5. CONDUCTED EMISSION TEST 9
5.1. Block Diagram of Test Setup 9
5.2. Test Standard 9
5.3. Conducted Emission Limit 9
5.4. EUT Configuration on Test 9
5.5. Operating Condition of EUT 10
5.6. Test Procedure 10
5.7. Test Result 10
6. RADIATED EMISSION MEASUREMENT 13
6.1. Block Diagram of Test Setup 13
6.2. Test Standard 14
6.3. EMI Test Receiver Setup 14
6.4. Test Procedure 14
6.5. Test Result 14
7. OCCUPIED BANDWIDTH 18
7.1. Block Diagram of Test Setup 18
7.2. Rules and specifications 18
7.3. Test Procedure 18
7.4. Test Result 18
8. EUT TEST PHOTOS 20

1. GENERAL INFORMATION

1.1. Report information

1.1.1. This report is not a certificate of quality; it only applies to the sample of the specific product/equipment given at the time of its testing. The results are not used to indicate or imply that they are application to the similar items. In addition, such results must not be used to indicate or imply that CTB approves recommends or endorses the manufacture, supplier or use of such product/equipment, or that CTB in any way guarantees the later performance of the product/equipment.

1.1.2. The sample/s mentioned in this report is/are supplied by Applicant, CTB therefore assumes no responsibility for the accuracy of information on the brand name, model number, origin of manufacture or any information supplied.

1.1.3. Additional copies of the report are available to the Applicant at an additional fee. No third part can obtain a copy of this report through CTB, unless the applicant has authorized CTB in writing to do so.

1.2. Measurement Uncertainty

Available upon request.

1.3. Test Facility

Site Description

Name of Firm	:	Shenzhen CTB Testing Technology Co., Ltd.
Site Location	:	1&2/F., Building A, No.26, Xinhe Road, Xinqiao, Xinqiao Street, Bao'an District, Shenzhen, Guangdong, China

1.4. Test Uncertainty

Item	Uncertainty
Occupancy bandwidth	54.3kHz
Conducted output power Above 1G	0.9dB
Conducted output power below 1G	0.9dB
Power Spectral Density , Conduction	0.9dB
Conduction spurious emissions	2.0dB
Out of band emission	2.0dB
3m camber Radiated spurious emission(9KHz-30MHz)	3m camber Radiated spurious emission(9KHz-30MHz)
3m camber Radiated spurious emission(30MHz-1GHz)	3m camber Radiated spurious emission(30MHz-1GHz)
3m chamber Radiated spurious emission(1GHz-18GHz)	3m chamber Radiated spurious emission(1GHz-18GHz)
3m chamber Radiated spurious emission(18GHz-40GHz)	3m chamber Radiated spurious emission(18GHz-40GHz)
humidity uncertainty	5.5%
Temperature uncertainty	0.63℃
frequency	1×10-7
Conducted Emission (150KHz-30MHz)	3.2 dB
Radiated Emission(30MHz ~ 1000MHz)	4.8 dB
Radiated Emission(1GHz ~6GHz)	4.9 dB

2. PRODUCT DESCRIPTION

2.1. EUT Description

Description	:	WIRELESS CHARGER
Model Number	:	LS116
Serial Model	:	LS101, LS102, LS103, LS104, LS105, LS106, LS107, LS108, LS109, LS110, LS111, LS112, LS113, LS114, LS115, LS117, LS118, LS120, LS121
Model Difference	:	Only different for model name and apperance, the test model is LS116
Power Supply		Input: 9V/2A
MAX wireless charger power		wireless charger for Phone :15W wireless charger for Earphone :5W wireless charger for Watch :5W
Work Frequency	:	110-205KHz

2.2. Block Diagram of EUT Configuration

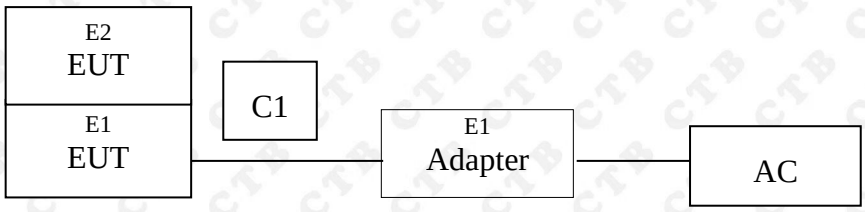

2.3. Test Conditions

Temperature: 23~25℃

Relative Humidity: 50~63 %

2.4. DescriptionOfSupport Units (Conducted Mode)

The EUT has been tested as an independent unit together with other necessary accessories or support units. The following support units or accessories were used to form a representative test configuration during the tests.

Item	Equipment	Mfr/Brand	Model/Type No.	Series No.	Note
E1	I-Phone	Apple	12Pro	/	/
E1	Adapter	JIYIN	JY-05100C	/	/

Item	Shielded Type	Ferrite Core	Length	Note

Note:

(1) The support equipment was authorized by Declaration of Confirmation.
(2) For detachable type I/O cable should be specified the length in cm in『Length』column.
(3) "YES" is means "shielded" "with core"; "NO" is means "unshielded" "without core".

3. TEST RESULTS SUMMARY

Table 1 Test Results Summary

Section	Test Items	Test Results
15.207	Conducted disturbance	Pass
15.209(a)(f)	Radiated disturbance	Pass
15.215	20 d B Bandwidth	Pass

Remark: "N/A" means "Not applicable."

4. TEST EQUIPMENT USED

4.1. MEASUREMENT INSTRUMENTS LIST

Item	Equipment	Manufacturer	Type No.	Serial No.	Calibrated until
1	Spectrum Analyzer	Agilent	N9020A	MY52090073	2024.07.05
2	Power Sensor	Agilent	U2021XA	MY56120032	2024.07.05
3	Power Sensor	Agilent	U2021XA	MY56120034	2024.07.05
4	Communication test set	R&S	CMW500	108058	2024.07.05
5	Spectrum Analyzer	KEYSIGHT	N9020A	MY51289897	2024.07.05
6	Signal Generator	Agilent	N5181A	MY50140365	2024.07.05
7	Vector signal generator	Agilent	N5182A	MY47420195	2024.07.05
8	Communication test set	Agilent	E5515C	MY50102567	2024.07.06
9	2.4 GHz Filter	Shenxiang	MSF2400-2483.5MS-1154	20181015001	2024.07.05
10	5 GHz Filter	Shenxiang	MSF5150-5850 MS-1155	20181015001	2024.07.06
11	Filter	Xingbo	XBLBQ-DZA120	190821-1-1	2024.07.06
12	BT&WI-FI Automatic test software	Micowave	MTS8000	Ver. 2.0.0.0	/
13	Rohde & Schwarz SFU Broadcast Test System	R&S	SFU	101017	2024.10.30
14	Temperature humidity chamber	Hongjing	TH-80CH	DG-15174	2024.07.05
15	234G Automatic test software	Micowave	MTS8200	Ver. 2.0.0.0	/
16	966 chamber	C.R.T.	966	/	2024.08.11
17	Receiver	R&S	ESPI	100362	2024.07.05
18	Amplifier	HP	8447E	2945A02747	2024.07.05
19	Amplifier	Agilent	8449B	3008A01838	2024.07.05
20	TRILOG Broadband Antenna	Schwarzbeck	VULB 9168	00869	2024.07.08
21	Double Ridged Broadband Horn Antenna	Schwarzbeck	BBHA9120D	01911	2024.07.08
22	EMI test software	Fala	EZ-EMC	FA-03A2 RE	/
23	Loop Antenna	Schwarzbeck	FMZB 1519B	1519B-224	2024.07.08
24	loop antenna	ZHINAN	ZN30900A	GTS534	/
25	40G Horn antenna	A/H/System	SAS-574	588	2024.10.30

26	Amplifier	AEROFLEX	Aeroflex	097	2024.07.05

Continuous disturbance					
No.	Equipment	Manufacturer	Model No.	Serial No.	Calibrated until
1	LISN	ROHDE&SCHWARZ	ESH3-Z5	100318	2024.07.05
2	Pulse limiter	ROHDE&SCHWARZ	ESH3Z2	357881052	2024.07.05
3	EMI TEST RECEIVER	ROHDE&SCHWARZ	ESCI	100428/003	2024.07.05
4	Coaxial cable	ZDECL	Z302S-NJ-SMA J-12M	18091905	2024.07.05
5	ISN	Schwarzbeck	NTFM8158	183	2024.07.05
6	Communication test set	Agilent	E5515C	MY50102567	2024.07.05
7	Communication test set	R&S	CMW500	108058	2024.07.05
8	EZ-EMC	Frad	EMC-con3A1.1	/	/

Radiated emission					
No.	Equipment	Manufacturer	Model No.	Serial No.	Calibrated until
1	Double Ridged Broadband Horn Antenna	Schwarzbeck	BBHA 9120 D	01911	2024.07.08
2	TRILOG Broadband Antenna	Schwarzbeck	VULB 9168	00869	2024.07.08
3	Amplifier	Agilent	8449B	3008A01838	2024.07.05
4	Amplifier	HP	8447E	2945A02747	2024.07.05
5	EMI TEST RECEIVER	ROHDE&SCHWARZ	ESCI	100428/003	2024.07.05
6	Coaxial cable	ETS	RFC-SNS-100-NMS-80 NI	/	2024.07.05
7	Coaxial cable	ETS	RFC-SNS-100-NMS-20 NI	/	2024.07.05
8	Coaxial cable	ETS	RFC-SNS-100-SMS-20 NI	/	2024.07.05
9	Coaxial cable	ETS	RFC-NNS-100 -NMS-300 NI	/	2024.07.05
10	Communication test set	Agilent	E5515C	MY50102567	2024.07.05
11	Communication test set	R&S	CMW500	108058	2024.07.05
12	EZ-EMC	Frad	EMC-con3A1.1	/	/
13	loop antenna	Schwarzbeck	FMZB 1519B	1519B-224	2024.07.08

5. CONDUCTED EMISSION TEST

5.1. Block Diagram of Test Setup

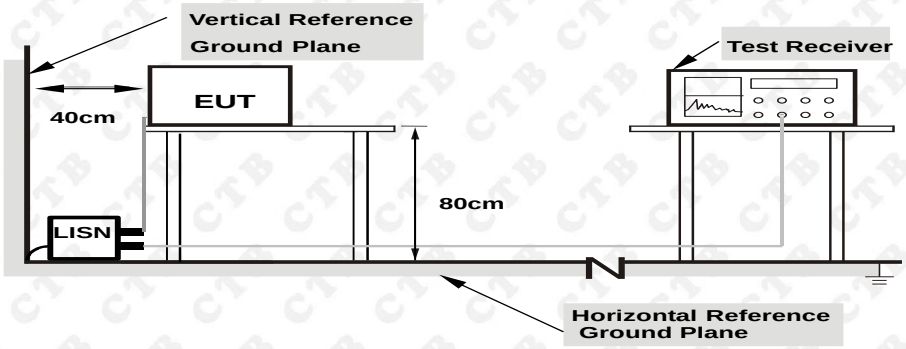

Note: 1.Support units were connected to second LISN.
2.Both of LISNs (AMN) are 80 cm from EUT and at least 80 from other units and other metal planes

The setup of EUT is according with per ANSI C63.10-2013 measurement procedure.
The specification used was with the FCC Part 15.207 limits.

5.2. Test Standard

FCC§15.207

5.3. Conducted Emission Limit

Frequency MHz	Limits dB(μV)	
	Quasi-peak Level	Average Level
0.15 ~ 0.50	66 ~ 56*	56 ~ 46*
0.50 ~ 5.00	56	46
5.00 ~ 30.00	60	50

Notes: 1. *Decreasing linearly with logarithm of frequency.

5.4. EUT Configuration on Test

The following equipments are installed on conducted emission test to meet FCC Part 15.207 requirement and operating in a manner, which tends to maximize its emission characteristics in a normal application.

5.5. Operating Condition of EUT

5.5.1.Setup the EUT and simulators as shown in Section 5.1.

5.5.2.Turn on the power of all equipments.

5.5.3.Let the EUT work in test modes (EUTWorking) and test it.

5.6. Test Procedure

The EUT is put on a table of non-conducting material that is 80cm high. The vertical conducting wall of shielding is located 40cm to the rear of the EUT. The power line of the EUT is connected to the AC mains through a Artificial Mains Network (A.M.N.). A EMI test receiver (R&S Test Receiver ESHS30) is used to test the emissions form both sides of AC line. The bandwidth of EMI test receiver is set at 9kHz.

The bandwidth of the test receiver (R&S Test Receiver ESHS30) is set at 10KHz.

We pretest AC 120V and AC 240V, the worst voltage was AC 120V and the data recording in the report.

5.7. Test Result

PASS

Please refer to the following pages.

Temperature:	23℃	Relative Humidity:	54%
Pressure:	1010hPa	Phase :	L
Test Voltage:	AC 120V/60Hz	Test Mode:	15W

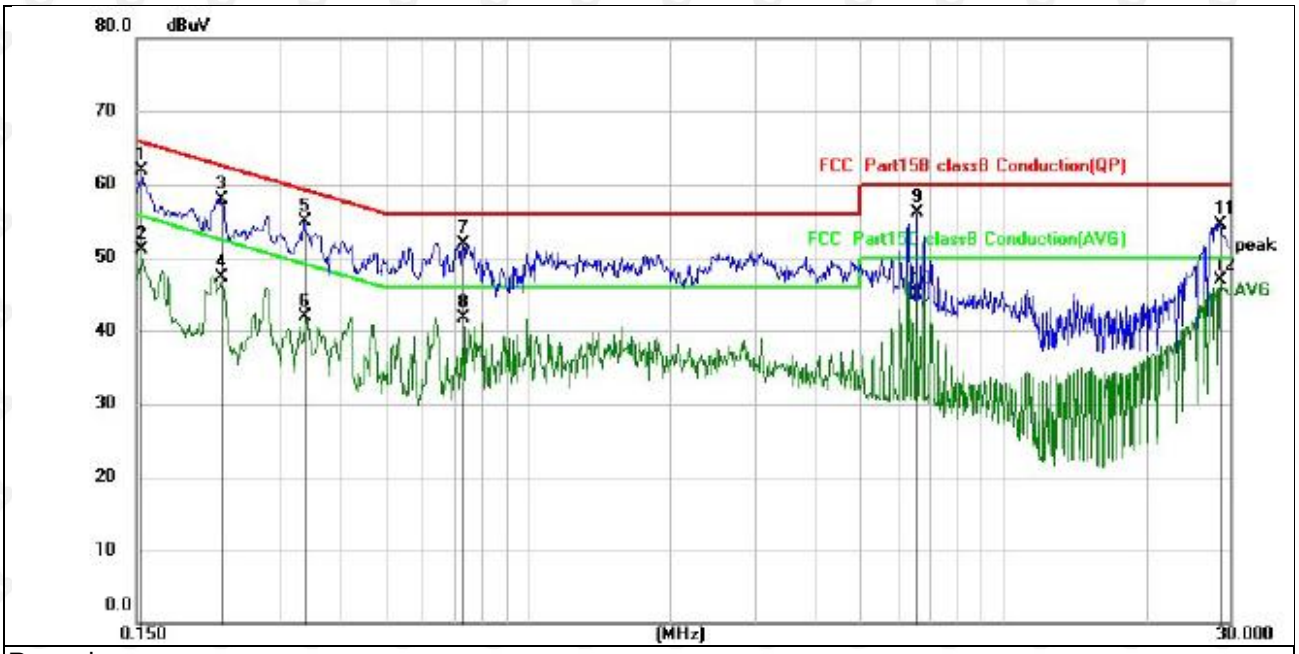

Remark:
1. All readings are Quasi-Peak and Average values.
2. Factor = Insertion Loss + Cable Loss.

No.	Mk.	Freq.	Reading Level	Correct Factor	Measure-ment	Limit	Over	
		MHz	dBuV	dB	dBuV	dBuV	dB	Detector
1		0.1539	52.02	9.95	61.97	65.79	-3.82	QP
2		0.1539	41.09	9.95	51.04	55.79	-4.75	AVG
3		0.2260	47.93	9.95	57.88	62.60	-4.72	QP
4		0.2260	37.35	9.95	47.30	52.60	-5.30	AVG
5		0.3379	44.96	9.97	54.93	59.25	-4.32	QP
6		0.3379	31.98	9.97	41.95	49.25	-7.30	AVG
7		0.7300	41.88	10.02	51.90	56.00	-4.10	QP
8		0.7300	31.60	10.02	41.62	46.00	-4.38	AVG
9		6.5778	45.52	10.49	56.01	60.00	-3.99	QP
10		6.5778	34.37	10.49	44.86	50.00	-5.14	AVG
11		28.4980	43.25	11.31	54.56	60.00	-5.44	QP
12	*	28.4980	35.57	11.31	46.88	50.00	-3.12	AVG

Temperature:	23℃	Relative Humidity:	54%
Pressure:	1010hPa	Phase :	N
Test Voltage:	AC 120V/60Hz	Test Mode:	15W

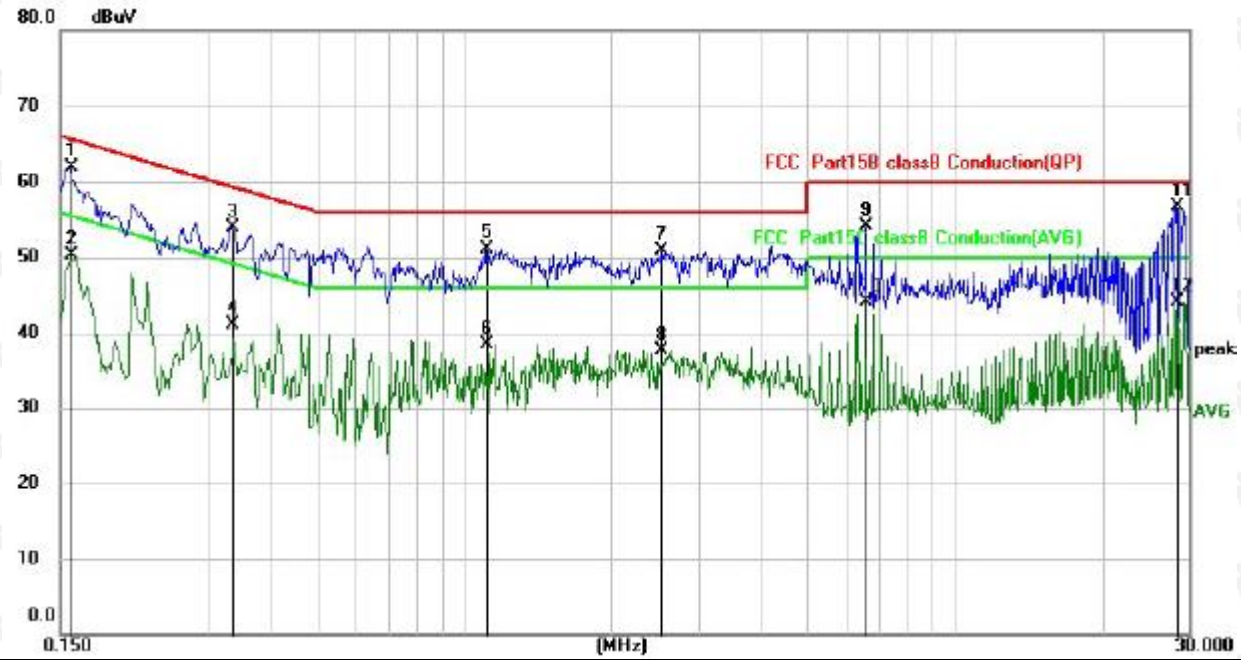

Remark:
1. All readings are Quasi-Peak and Average values.
2. Factor = Insertion Loss + Cable Loss.

No.	Mk.	Freq.	Reading Level	Correct Factor	Measure-ment	Limit	Over	
		MHz	dBuV	dB	dBuV	dBuV	dB	Detector
1		0.1580	52.00	9.95	61.95	65.57	-3.62	QP
2		0.1580	40.37	9.95	50.32	55.57	-5.25	AVG
3		0.3339	44.01	9.97	53.98	59.35	-5.37	QP
4		0.3339	31.08	9.97	41.05	49.35	-8.30	AVG
5		1.1100	41.05	10.02	51.07	56.00	-4.93	QP
6		1.1100	28.55	10.02	38.57	46.00	-7.43	AVG
7		2.5219	40.79	10.14	50.93	56.00	-5.07	QP
8		2.5219	27.58	10.14	37.72	46.00	-8.28	AVG
9		6.5700	43.64	10.49	54.13	60.00	-5.87	QP
10		6.5700	33.69	10.49	44.18	50.00	-5.82	AVG
11	*	28.3060	45.33	11.29	56.62	60.00	-3.38	QP
12		28.3060	32.88	11.29	44.17	50.00	-5.83	AVG

Note: All mode were tested and passed, only show the worst mode 15W in this report.

6. RADIATED EMISSION MEASUREMENT

6.1. Block Diagram of Test Setup

6.1.1.Block Diagram of connection between the EUT and the simulators

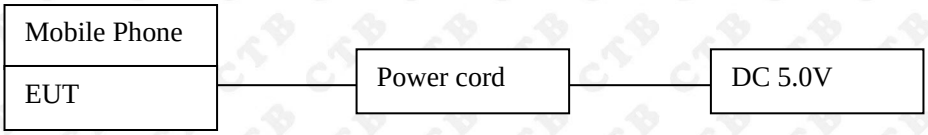

6.1.2.Anechoic Chamber Test Setup Diagram

（A）Radiated Emission Test-Up Frequency Below 30MHz

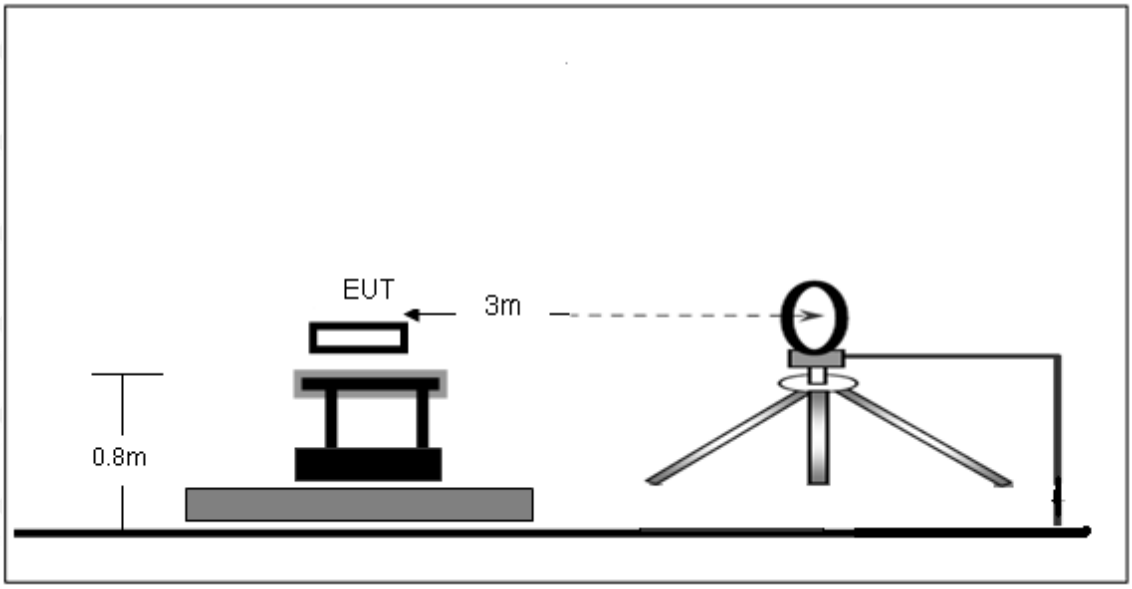

（B）Radiated Emission Test-Up Frequency 30MHz~1GHz

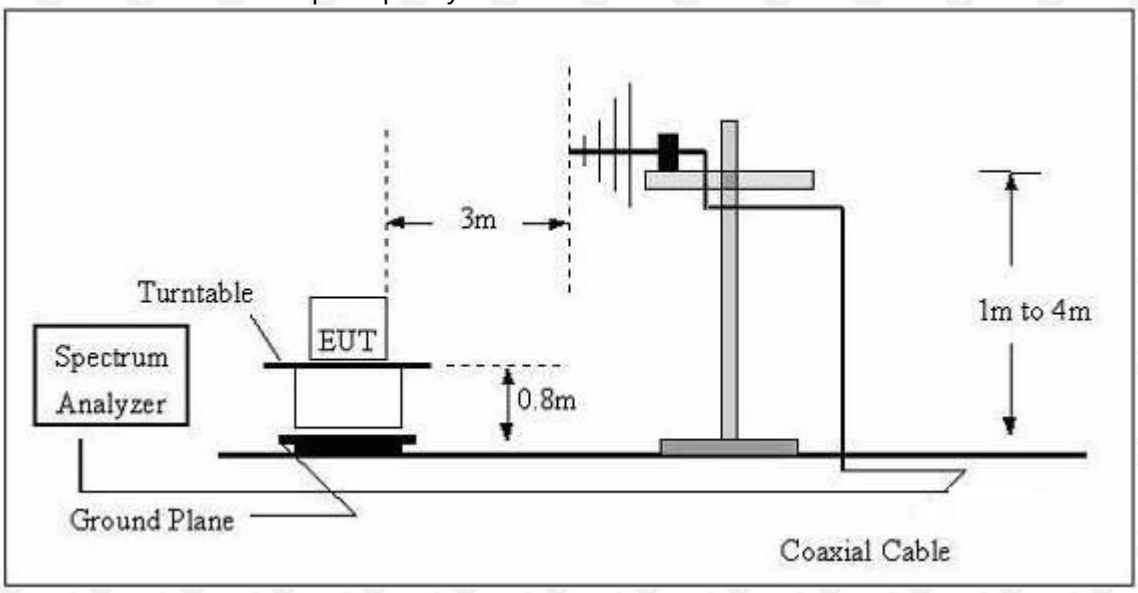

The radiated emission tests were performed in the 3 meters chamber test site, using the setup accordance with the ANSI C63.10-2013. The specification used was the FCC 15.209 and FCC 15.205 limits.

6.2. Test Standard

FCC §15.209; §15.205

6.3. EMI Test Receiver Setup

The system was investigated from 9kHz to1GHz.

During the radiated emission test, the EMI test receiver setup was set with the following configurations:

Frequency Range	RBW	Video B/W	Detector
9 kHz – 150 kHz	200 kHz	1 kHz	QP
150 kHz – 30MHz	9kHz	30kHz	QP
30 MHz – 1000 MHz	120 kHz	300 kHz	QP

Note: For the frequency bands 9-90 kHz and 110-490 kHz, the test was based on average detector.

6.4. Test Procedure

The EUT is placed on a turn table which is 0.8 meter above ground. The turn table can rotate 360 degrees to determine the position of the maximum emission level. The EUT is set 3 meters away from the receiving antenna which is mounted on a antenna tower. The antenna can move up and down between 1 to 4 meters to find out the maximum emission level. Broadband antenna (calibrated by dipole antenna) are used as a receiving antenna. Both horizontal and vertical polarization of the antenna are set on measurement.

6.5. Test Result

PASS

Please refer to the following pages.

9kHz-30MHz

Temperature:	23℃	Relative Humidity:	54%
Pressure:	1010 hPa	Polarization :	Horizontal
Test Voltage:	AC120V/60Hz	Test Mode :	15W

Freq.(MHz)	Detector Mode (PK/QP/AV)	Reading(dBuV)	Factor (dB)	ActualFS(d BuV/m)	Limits3m(d BuV/m)	Margin (dBuV/m)
0.139	PEAK	51.16	20.47	71.63	104.74	-33.11
0.364	PEAK	45.69	20.23	65.92	96.38	-30.46
0.592	PEAK	38.49	20.01	58.5	72.16	-13.66
0.828	PEAK	31.90	19.95	51.85	69.24	-17.39
1.16	PEAK	27.48	19.87	47.35	66.32	-18.97
2.38	PEAK	26.90	19.78	46.68	60.07	-13.39

Note:
Pre-scan in the all of mode, the worst case in of was recorded.
Factor = antenna factor + cable loss – pre-amplifier.
Margin = Limit - Emission Level.
Note: All mode were tested and passed, only show the worst mode 15W in this report.

30MHz-1GHz

Temperature:	23℃	Relative Humidity:	54%
Pressure:	1010 hPa	Polarization :	Horizontal
Test Voltage:	AC120V/60Hz	Test Mode :	15W

Remark:
Factor = Antenna Factor + Cable Loss – Pre-amplifier, Margin = Measurement– Limit.

No.	Mk.	Freq.	Reading Level	Correct Factor	Measure-ment	Limit	Over	
		MHz	dBuV	dB	dBuV/m	dB/m	dB	Detector
1	*	41.4941	41.89	-5.05	36.84	40.00	-3.16	QP
2	!	51.6613	42.66	-6.65	36.01	40.00	-3.99	QP
3		123.0494	39.94	-5.13	34.81	43.50	-8.69	QP
4		195.8218	42.50	-7.51	34.99	43.50	-8.51	QP
5	!	317.1444	45.07	-4.30	40.77	46.00	-5.23	QP
6		434.8267	38.57	-1.39	37.18	46.00	-8.82	QP

Temperature:	23℃	Relative Humidity:	54%
Pressure:	1010 hPa	Polarization :	Vertical
Test Voltage:	AC120V/60Hz	Test Mode :	15W

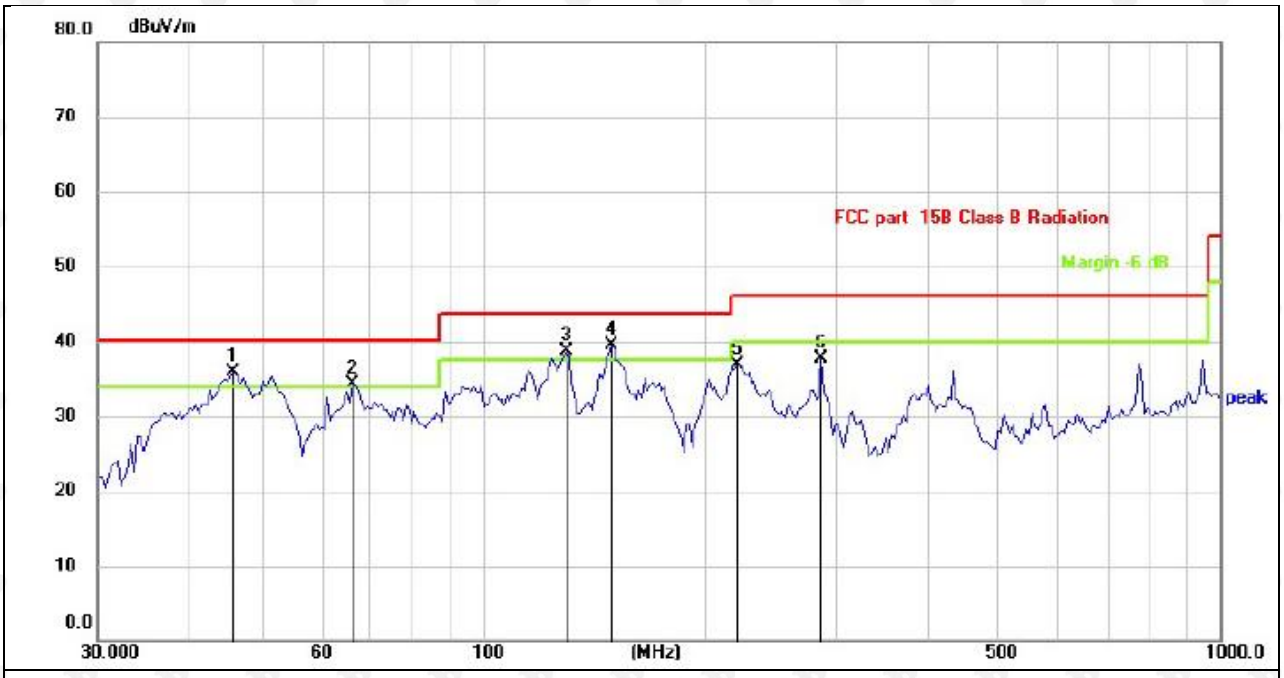

Remark:
Factor = Antenna Factor + Cable Loss – Pre-amplifier, Margin = Measurement– Limit.

No.	Mk.	Freq.	Reading Level	Correct Factor	Measure-ment	Limit	Over	
		MHz	dBuV	dB	dBuV/m	dB/m	dB	Detector
1	!	45.6946	41.78	-5.83	35.95	40.00	-4.05	QP
2	!	66.6156	41.90	-7.60	34.30	40.00	-5.70	QP
3	!	129.6948	43.54	-4.83	38.71	43.50	-4.79	QP
4	*	149.2238	42.80	-3.26	39.54	43.50	-3.96	QP
5		221.3920	44.13	-7.23	36.90	46.00	-9.10	QP
6		287.9904	43.06	-5.26	37.80	46.00	-8.20	QP

Note: All mode were tested and passed, only show the worst mode 15W in this report.

7. OCCUPIED BANDWIDTH

7.1. Block Diagram of Test Setup

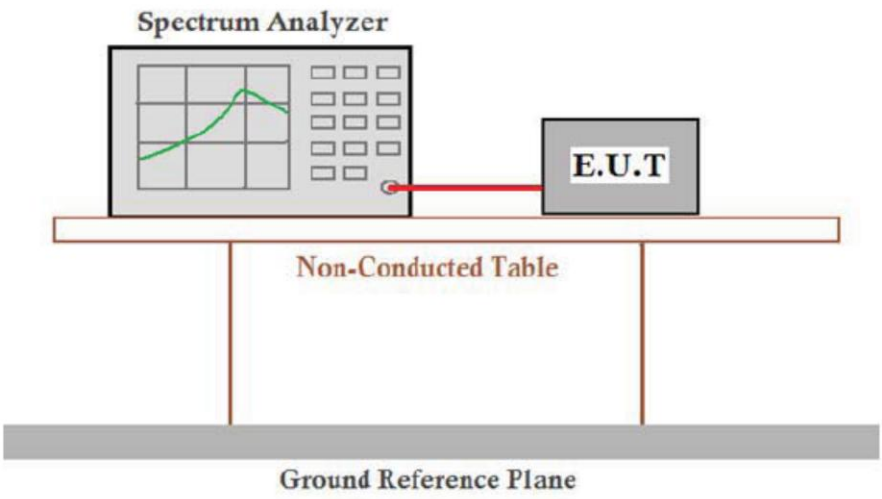

7.2. Rules and specifications

CFR 47 Part 15.215(c)
ANSI C63.10-2013

7.3. Test Procedure

Intentional radiators operating under the alternative provisions to the general emission limits, as contained in §§15.217 through 15.257 and in subpart E of this part, must be designed to ensure that 20dB bandwidth of the emission, or whatever bandwidth may otherwise be specified in the specific rule section under which the equip compliance with the 20dB attenuation specification may base on measurement at the intentional radiator's antenna output terminal unless the intentional radiator uses a permanently attached antenna, in which case compliance shall be.deomonstrated by measuring the radiated emissions.

7.4. Test Result

PASS

Mode	Freq (KHz)	20dB Bandwidth (Hz)	Limit (Hz)	Conclusion
Tx Mode	113.5	332	/	PASS

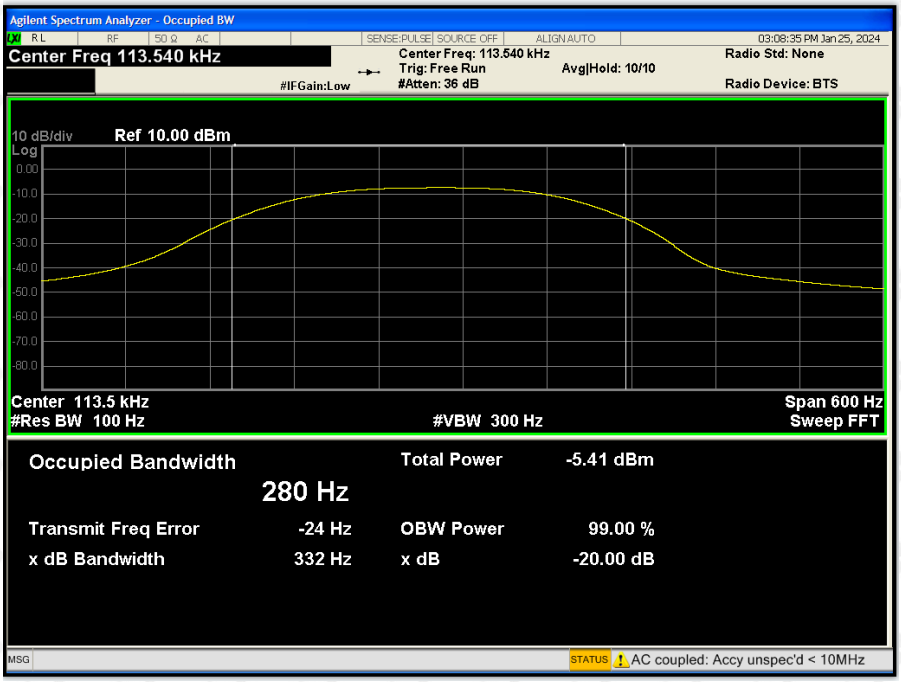

8. EUT TEST PHOTOS

Conducted Measurement Photos

9KHz-30MHz

30MHz-1GHz

※※※※※ **END OF REPORT** ※※※※※