ChipStation Home

User Guide

Please read this User Guide carefully before using the device.
Please retain this guide for future reference.

Chipjet

1 Device Appearance

A

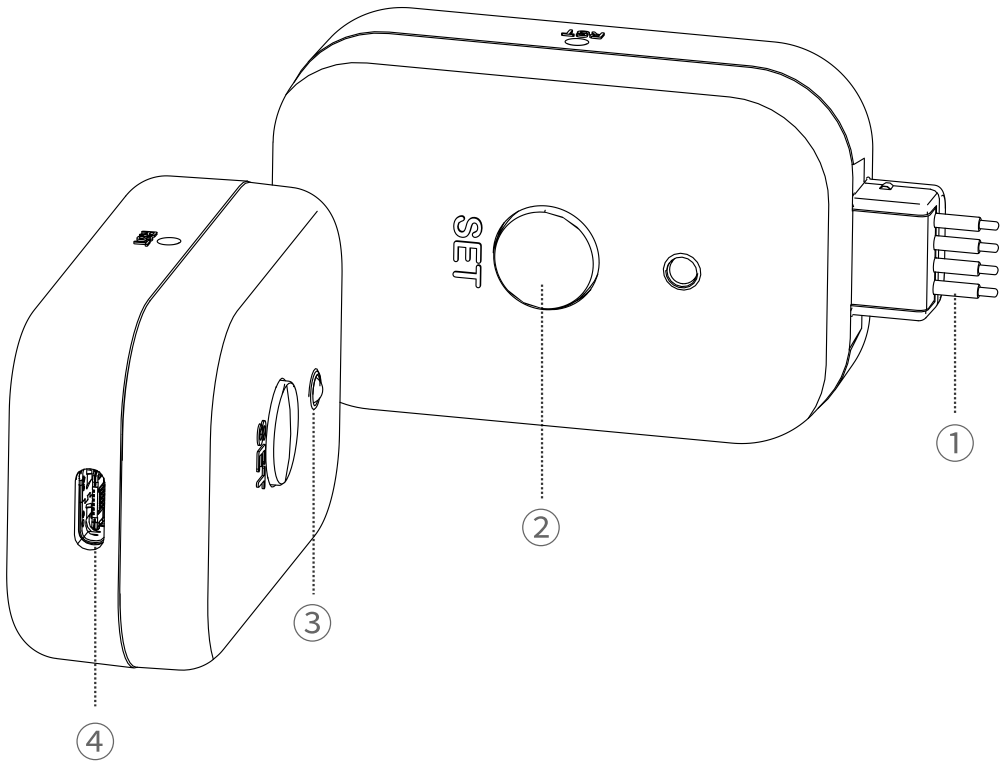

①Pin ②Button ③Indicator Light ④USB Port

B

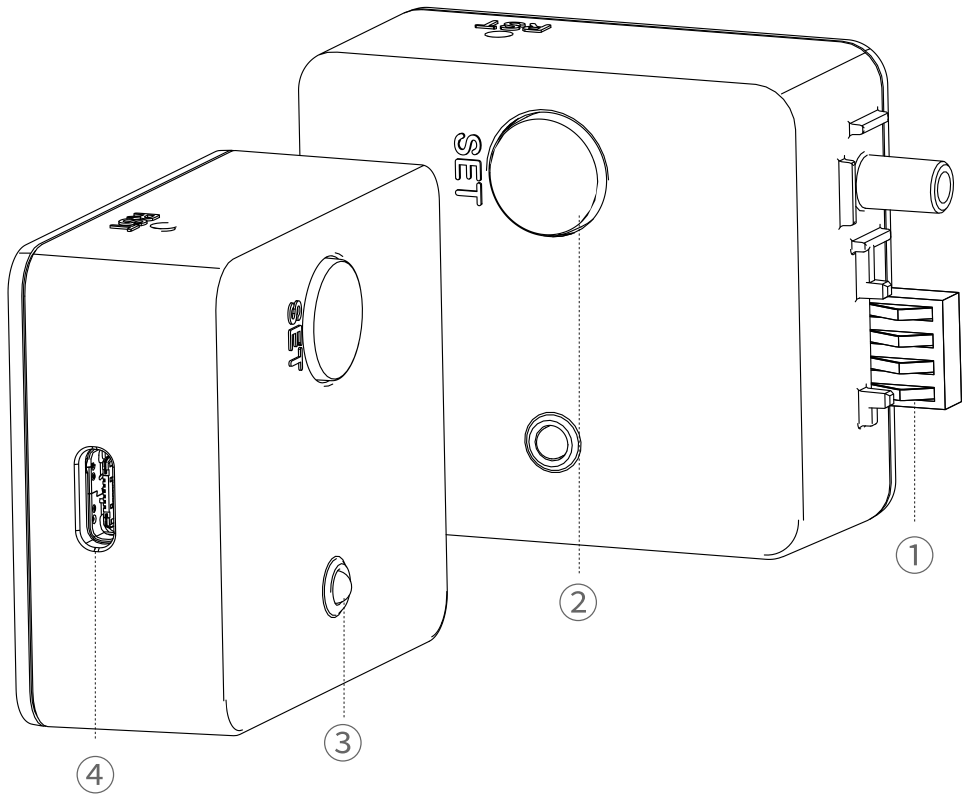

①Contact Head ②Button ③Indicator Light ④USB Port

2 Operation

Scan the QR code on the cover to download the ChipStation Home app. Open the app and enter the main page.

Follow the illustrations in the app to connect the device to the power supply.

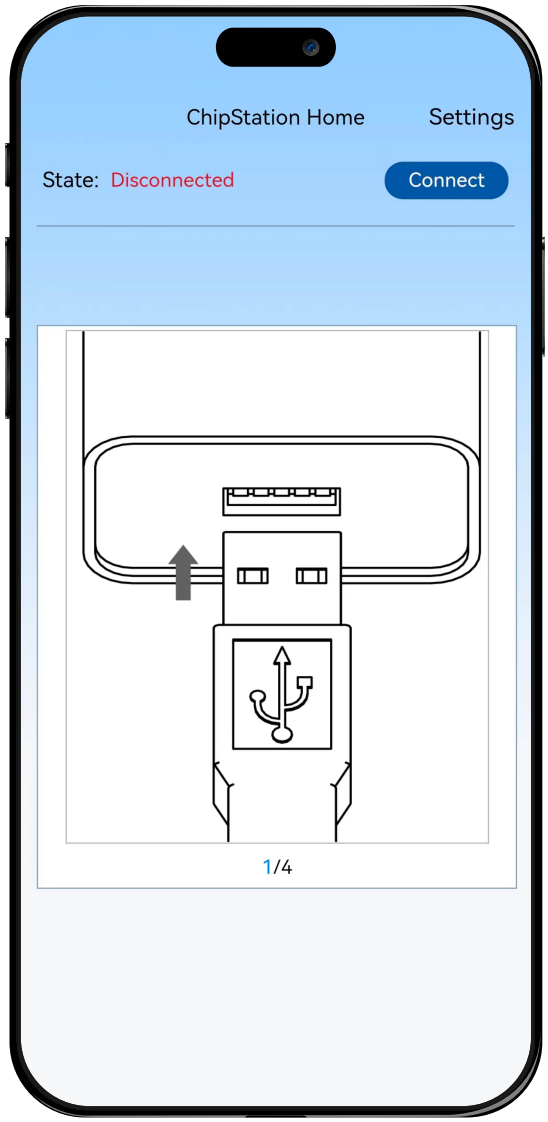

Touch the【Connect】button and connect your desired device to the app. If the app is restarted, it will recognize and connect to the device automatically.

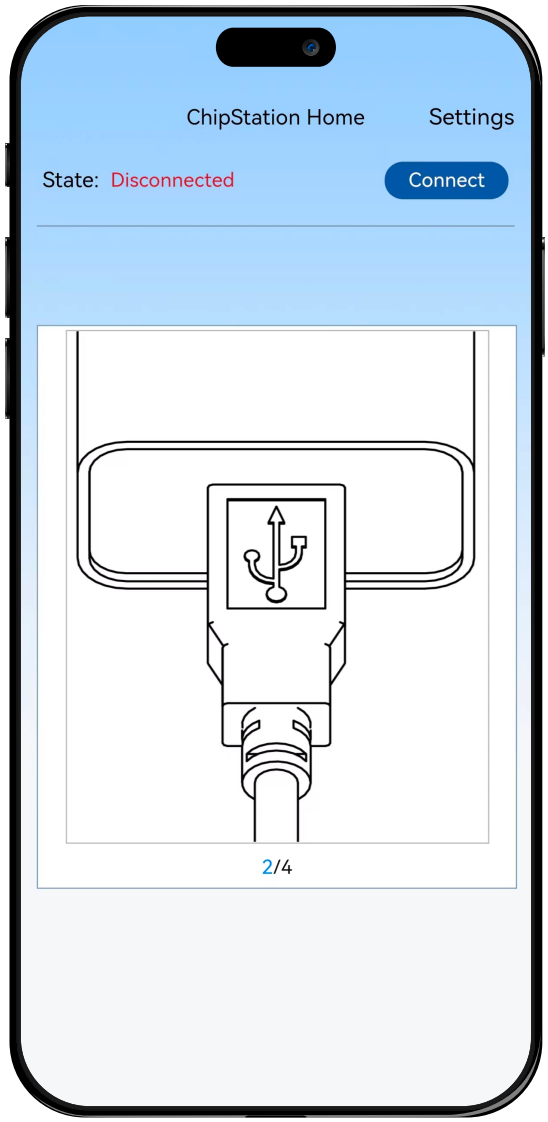

The device firmware will be updated automatically.

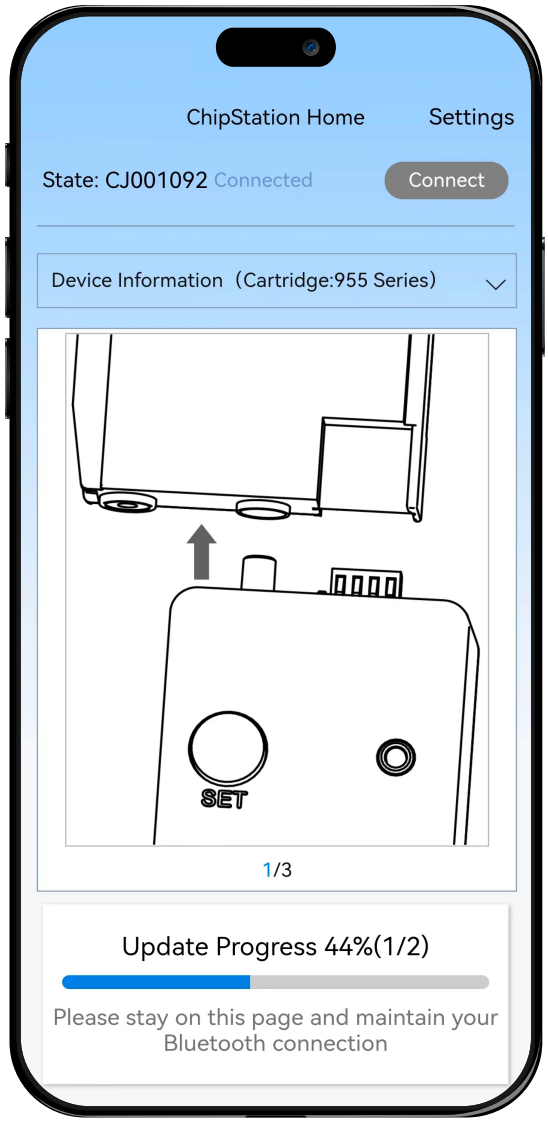

Follow the illustrations to update the cartridge.

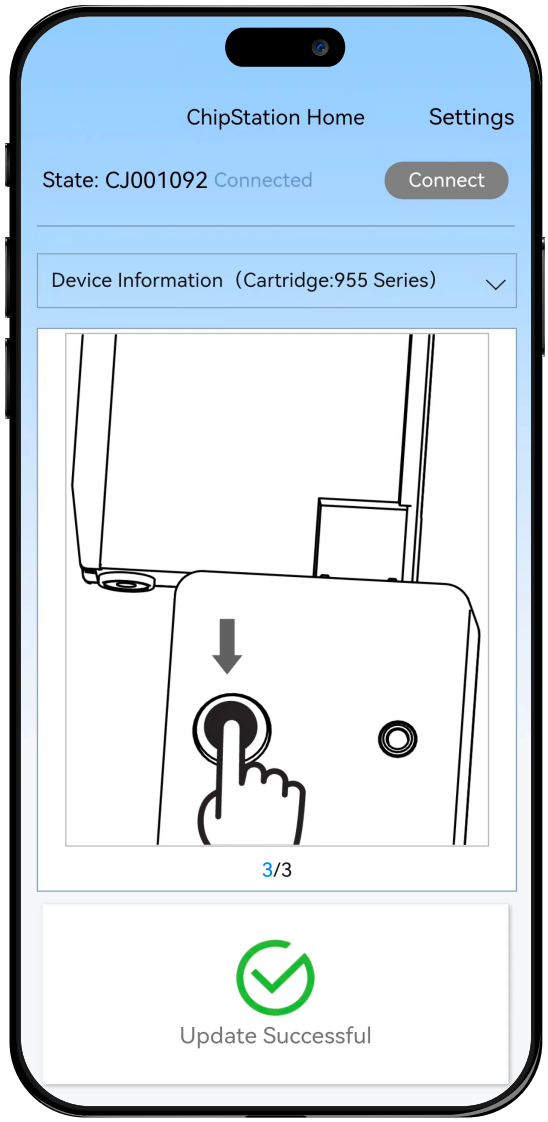

FCC Statement:
This device complies with part 15 of the FCC Rules. Operation is subject to the following two conditions: (1) This device may not cause harmful interference, and (2) this device must accept any interference received, including interference that may cause undesired operation.
This equipment has been tested and found to comply with the limits for a Class B digital device, pursuant to part 15 of the FCC Rules. These limits are designed to provide reasonable protection against harmful interference in a residential installation. This
Equipment generates,uses and can radiate radio frequency energy and,if not installed and used in accordance with the instructions,may cause harmful interference to radio communications.However,there is no guarantee that interference will not occur in a Particular installation.If thise quipment does cause harmful interference to radio or television reception, which can be determined by turning the equipment off and on, the user is encouraged to try to correct the interference by one or more of the following measures:
—Reorient or relocate the receiving antenna.
—Increase the separation between the equipment and receiver.
—Connect the equipment into an outlet on a circuit different from that to which the receiver is connected.
—Consult the dealer or an experienced radio/TV technician for help.
Caution: Any changes or modifications not expressly approved by the party responsible for compliance could void the user's authority to operate the equipment.
This equipment complies with FCC radiation exposure limits set forth for an uncontrolled environment. This transmitter must not be co-located or operating in conjunction with any other antenna or transmitter.