S

LILY-W1 series

Host-based Wi-Fi modules

System integration manual

Abstract

This document describes LILY-W1 series short range Wi-Fi front end modules. These host-based modules are ultra-compact, cost-efficient IEEE 802.11b/g/n Wi-Fi front end modules in the LILY form factor. This module series includes variants with or without internal antenna and LTE filter. It includes an integrated MAC/Baseband processor and RF front end components. It can connect to a host through its SDIO or USB interface.

UBX-15027600 - R12
C1-Public

Document information

Title	**LILY-W1 series**	
Subtitle	Host-based Wi-Fi modules	
Document type	System integration manual	
Document number	UBX-15027600	
Revision and date	R12	6-May-2022
Disclosure restriction	C1-Public	

Product status	Corresponding content status	
Functional sample	Draft	For functional testing. Revised and supplementary data will be published later.
In development / Prototype	Objective specification	Target values. Revised and supplementary data will be published later.
Engineering sample	Advance information	Data based on early testing. Revised and supplementary data will be published later.
Initial production	Early production information	Data from product verification. Revised and supplementary data may be published later.
Mass production / End of life	Production information	Document contains the final product specification.

This document applies to the following products:

Product name
LILY-W131
LILY-W132
LILY-W133

☞ For information about the related hardware, software, and status of listed product types, refer to the respective data sheet [1]

u -blox or third parties may hold intellectual property rights in the products, names, logos, and designs included in this document. Copying, reproduction, or modification of this document or any part thereof is only permitted with the express written permission of u-blox. Disclosure to third parties is permitted for clearly public documents only.
The information contained herein is provided “as is” and u-blox assumes no liability for its use. No warranty, either express or implied, is given, including but not limited to, with respect to the accuracy, correctness, reliability, and fitness for a particular purpose of the information. This document may be revised by u-blox at any time without notice. For the most recent documents, visit www.u blox.com.
Copyright © u-blox AG.

Contents

Document information **2**
Contents **3**
1 System description **6**
1.1 Overview and applications 6
1.1.1 Module architecture 7
1.1.2 Radio interface 7
1.1.3 Operating modes 8
1.2 Pin configuration and function 8
1.2.1 Pin attributes 8
1.2.2 Pin list 9
1.3 Supply interfaces 10
1.3.1 Main supply inputs 10
1.3.2 Power-up sequence 11
1.4 System function interfaces 11
1.4.1 Module power-on 11
1.4.2 Module power-off 12
1.4.3 Wake-Up signals 12
1.4.4 Configuration signals 12
1.5 Data communication interfaces 12
1.5.1 SDIO interface 12
1.5.2 USB 2.0 interface 13
1.6 Antenna interfaces 14
1.6.1 Approved antenna designs 14
1.7 Other remarks 14
1.7.1 Unused pins 14
2 Design-in **15**
2.1 Overview 15
2.2 Antenna interface 15
2.2.1 RF transmission line design (LILY-W131 only) 16
2.2.2 Antenna design (LILY-W131 only) 17
2.2.3 On-board antenna design (LILY-W132 and LILY-W133 only) 22
2.3 Supply interfaces 23
2.3.1 Module supply design 23
2.4 Data communication interfaces 24
2.4.1 SDIO 24
2.4.2 USB 2.0 25
2.5 Other interfaces and notes 26
2.6 General high speed layout guidelines 26
2.6.1 General considerations for schematic design and PCB floor-planning: 26
2.6.2 Component placement 26

2.6.3 Layout and manufacturing 26
2.7 Module footprint and paste mask 27
2.8 Thermal guidelines 28
2.9 ESD guidelines 29
2.10 Design-in checklist 30
2.10.1 Schematic checklist 30
2.10.2 Layout checklist 30
3 Software 31
3.1 Available software packages 31
3.1.1 Open-source Linux/Android drivers 31
3.1.2 MCUXpresso SDK 31
3.1.3 Proprietary drivers 32
3.2 Supported kernel versions 32
3.3 Driver and firmware architecture 32
3.4 Compiling the drivers 34
3.4.1 Prerequisites 34
3.4.2 Extracting the package content 34
3.4.3 Compile-time configuration 35
3.4.4 Building 35
3.5 Deploying the software 36
3.5.1 Blacklisting the mwifiex driver 37
3.5.2 Additional software requirements 37
3.6 Loading the drivers 37
3.6.1 SDIO driver 37
3.6.2 USB driver 38
3.6.3 Unloading the drivers 39
3.7 Reserving MAC addresses 39
3.8 Prevent high current in deep sleep 40
3.9 Configuration of transmit power limits 40
3.9.1 Purpose 40
3.9.2 Transmit power limit configuration file format 40
3.9.3 Applying the transmit power limit configuration 41
3.10 Adaptivity configuration (Energy Detection) 42
3.11 Usage examples 42
3.11.1 Wi-Fi access point mode 42
3.11.2 Wi-Fi station mode 43
3.12 Driver debugging 43
3.12.1 Compile-time debug options 44
3.12.2 Runtime debug options 44
4 Handling and soldering 45
4.1 Special ESD handling precautions 45
4.2 Packaging, shipping, storage, and moisture preconditioning 45

4.3 Reflow soldering process 46
4.3.1 Cleaning 47
4.3.2 Other notes 47
5 Regulatory compliance 48
5.1 General requirements 48
5.2 FCC/ISED End-product regulatory compliance 48
5.2.1 Referring to the u-blox FCC/ISED certification ID 49
5.2.2 Obtaining own FCC/ISED certification ID 49
5.2.3 Antenna requirements 50
5.2.4 Software configuration and control 50
5.2.5 Operating frequencies 51
5.2.6 End product labeling requirements 51
5.2.7 Original FCC and ISED grant 52
5.3 CE End-product regulatory compliance 52
5.3.1 Safety standard 52
5.3.2 CE Equipment classes 52
5.4 NCC end-product regulatory compliance 53
5.4.1 Modular transmitter requirements 53
5.4.2 End product labeling requirements 53
5.5 Japan End-product regulatory compliance 54
6 Product testing 55
6.1 u-blox in-series production test 55
6.2 OEM manufacturer production test 55
6.2.1 “Go/No go” tests for integrated devices 56
6.2.2 RF functional tests 57
Appendix 58
A Glossary 58
B Antenna reference designs 60
B.1 Reference design for external antennas (U.FL connector) 60
B.1.1 Floor plan and PCB stack-up 61
B.1.2 PCB stack-up 61
B.1.3 RF trace specification 62
C Wi-Fi Tx output power limits 63
Related documents 64
Revision history 65
Contact 65

1 System description

1.1 Overview and applications

The LILY-W1 series products are ultra-compact Wi-Fi front end modules. The available variants are supplied with or without an internal antenna and/or LTE filter that enables in-device co-existence – without jeopardizing Wi-Fi performance. The modules support IEEE 802.11b/g/n standards and are designed for integration with an LTE radio application. The modules include an integrated MAC/Baseband processor, band pass filter, and RF front-end components.

LILY-W132 includes an internal antenna and BAW filter that is especially designed for optimal LTE and Wi-Fi coexistence applications. LILY-W132 modules are developed for reliable, high-demanding industrial devices and applications that are capable of delivering a high-level of connectivity performance.

LILY-W132 and LILY-W133 are identical except for the BAW filter that is not included in LILY-W133. The integration procedures and recommendations are common to both variants.

LILY-W1 series modules are radio type approved for Europe (ETSI RED), US (FCC CFR 47 part 15 unlicensed modular transmitter approval), Canada (ISEDC RSS), Taiwan (NCC), and Japan (Giteki). The main features and interfaces of LILY-W1 series are summarized in Table 1.

	LILY-W131	LILY-W132	LILY-W133
Grade			
Automotive			
Professional	•	•	•
Standard			
Radio			
Chip inside	NXP 88W8801	NXP 88W8801	NXP 88W8801
Wi-Fi IEEE 802.11 standards	b/g/n	b/g/n	b/g/n
Wi-Fi 2.4 / 5 [GHz]	2.4	2.4	2.4
LTE filter		•	
Channel width [MHz]	20	20	20
Antenna type	1a	i	i
OS support			
Android / Linux (from u-blox)	•	•	•
Interfaces			
SDIO [version]	v2	v2	v2
USB 2.0	1	1	1
Features			
Micro Access Point [max connects]	8	8	8
AES hardware support	•	•	•
Wi-Fi direct	•	•	•
Factory-assigned MAC address	•	•	•
Factory calibrated RF	•	•	•

i = Internal antenna 1a = 1 pin for external antenna

Table 1: Key features of LILY-W1 series

Applications

- Industrial automation and cable replacement
- Smart gateway and Point of Sale (POS)
- Wireless surveillance and sensors
- Home automation and appliances
- Transport and logistic devices

1.1.1 Module architecture

Figure 1 shows the block diagram for all the LILY-W1 series module variants.

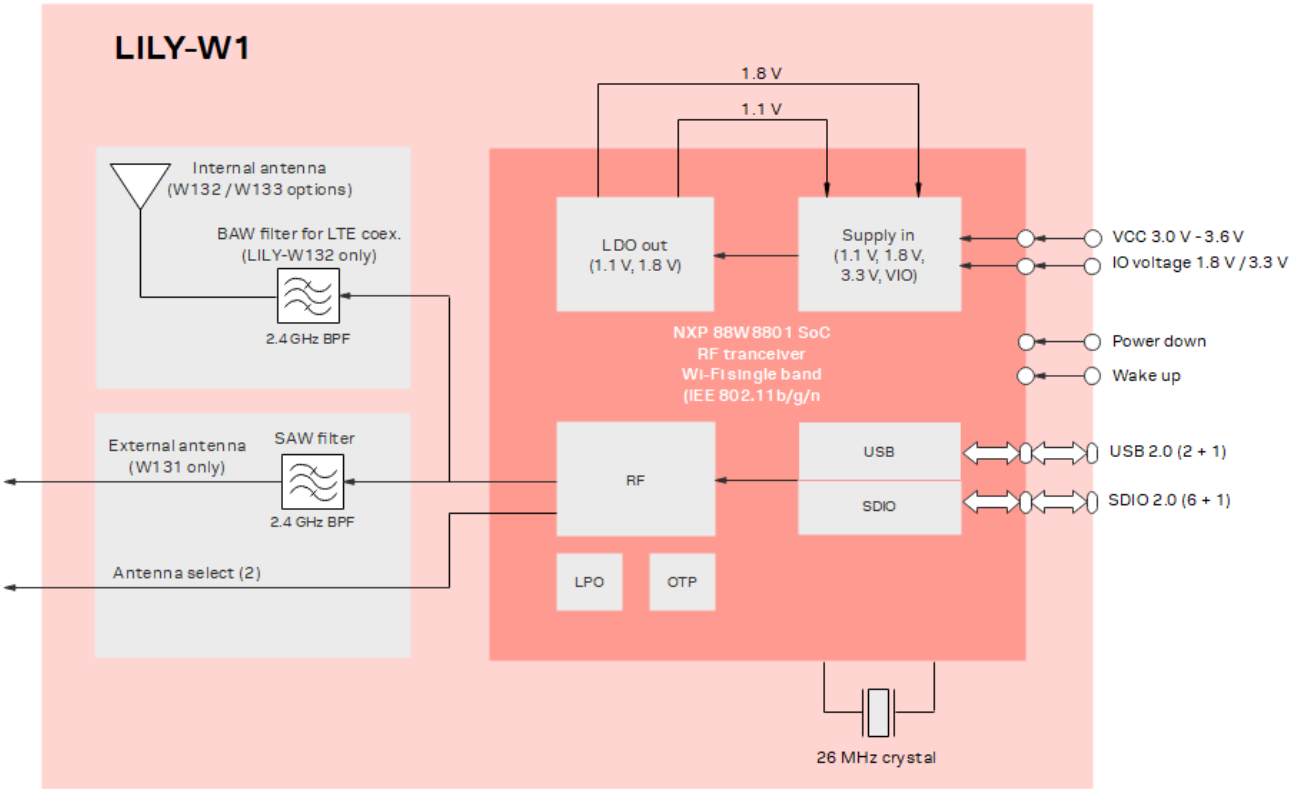

Figure 1: LILY-W1 block diagram

1.1.2 Radio interface

LILY-W1 supports Wi-Fi 802.11b/g/n operation in the 2.4 GHz radio band and is available in three variants:

- LILY-W131 – with single antenna pin for external antenna and support for antenna diversity via control signals (external RF switch required).
- LILY-W132 – with single internal PIFA antenna and BAW filter for optimal LTE and Wi-Fi coexistence applications.
- LILY-W133 – with single internal PIFA antenna.

See also Applicability and ordering codes.

1.1.3 Operating modes

LILY-W1 series modules LILY-W1 has several operating modes, as described in Table 2.

General status	Operating mode	Description
Power-down	Not Powered	The module is switched off. The **VCC** and **VCC_IO** supply domains are not present or are below the operating range.
	Power Down	**VCC** and **VCC_IO** supply within the operating range and **PD-n** pin is asserted. This is the lowest power condition with active voltage rails. All internal clocks are shut down; register and memory states are not maintained. Upon exiting power down mode, a reset is automatically performed and a firmware re-download is required to re-enter any of the above-mentioned operation modes.
Normal Operation	Deep Sleep	This is a low-power state used in the sleep state of many power save modes. It is a low-power state where the external reference clock and many blocks in the chip are switched off. Only a slow sleep clock is used to maintain register and memory states. Wake-up does not require a firmware re-download.
	IEEE Power Save (Station mode only)	The device automatically wakes up on beacons. This is dependent on the DTIM value of the AP it is connected to. If the DTIM value is 1 along with a beacon interval of 100 ms, the device wakes up every 100 ms. Similarly, for DTIM =2, the device wakes up at every 200 ms, and so on.
	Receive Idle / AP Beaconing	DUT is powered on and had completed firmware download. DUT is ready to receive packets but is not actively decoding any because none are being transmitted to it.
	Active	Tx/Rx data connection enabled and system runs at specified power consumption.

Table 2: Description of operation modes for LILY-W1 series

1.2 Pin configuration and function

1.2.1 Pin attributes

The pin attributes described in Table 3 include:

1. **Function:** Pin function.
2. **Pin name:** The name of the package pin or terminal.
3. **Pin number:** Package pin numbers associated with each signals.
4. **Power:** The voltage domain that powers the pin
5. **Type:** Signal type description:
    - I = Input
    - O = Output
    - I/O = Input and Output
    - D = Open drain
    - DS = Differential
    - PWR = Power
    - GND = Ground
    - PU = Internal Pull-Up
    - PD = Internal Pull-Down
    - H = High-Impedance pin
    - RF = Radio interface
6. **Signal name:** The signal name for that pin in the mode being used.
7. **Remarks:** Pin description and notes.

1.2.2 Pin list

Figure 2 and Table 3 list the pin-out of the LILY-W1 module, with pins grouped by function.

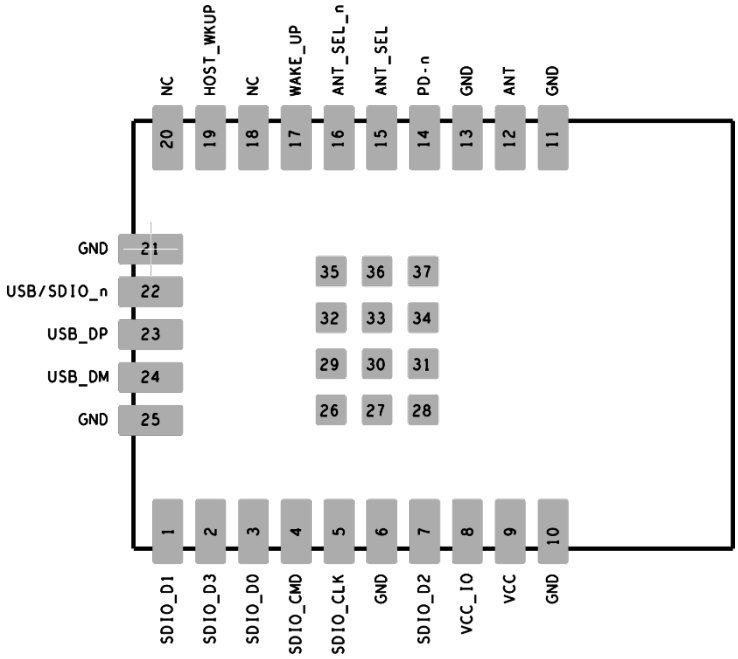

Figure 2: LILY-W1 pin assignment (top view)

Function	Pin name	Pin no.	Power	Type	Signal name	Remarks
Power	VCC	9	VCC	PWR	Module supply input	Voltage supply range: 3.0V – 3.6V
	VCC_IO	8	VCC_IO	PWR	IO Voltage supply input	Nominal supply range: 1.8V or 3.3V
	GND	6, 10, 11, 13, 21, 25, 26-37	GND	GND	Module ground	
Digital	SDIO_CLK	5	VCC_IO	I	SDIO Clock	SDIO 4-bit Mode: Clock input SDIO 1-bit Mode: Clock input SDIO SPI Mode: Clock input
	SDIO_CMD USB_VBUS_ON	4	VCC_IO	I/O	SDIO Command	SDIO 4-bit Mode: Command/response SDIO 1-bit Mode: Command line SDIO SPI Mode: Data input USB Mode: USB_VBUS_ON
	SDIO_D0	3	VCC_IO	I/O	SDIO data 0	SDIO 4-bit Mode: Data line Bit[0] SDIO 1-bit Mode: Data line SDIO SPI Mode: Data output
	SDIO_D1	1	VCC_IO	I/O	SDIO data 1	DIO 4-bit Mode: Data line Bit[1] SDIO 1-bit Mode: Interrupt SDIO SPI Mode: Interrupt
	SDIO_D2	7	VCC_IO	I/O	SDIO data 2	SDIO 4-bit Mode: Data line Bit[2] or read wait (optional) SDIO 1-bit Mode: Read wait (optional) SDIO SPI Mode: Reserved
	SDIO_D3	2	VCC_IO	I/O	SDIO data 3	SDIO 4-bit Mode: Data line Bit[3] SDIO 1-bit Mode: Reserved SDIO SPI Mode: Card select (active low)
	USB_DP	23	VCC	DS	USB Differential Data +	

Function	Pin name	Pin no.	Power	Type	Signal name	Remarks
	USB_DM	24	VCC	DS	USB Differential Data -	
Control	PD-n	14	VCC	I,PU	Power down	Active low
	HOST_WKUP	19	VCC_IO	O	Host Wake-Up	Module to Host
	WAKE_UP	17	1.8V (int.)	I,PU/PD	Radio Wake-Up	Host to Module, programmable Pull resistor. 1.8V CMOS input
	USB/SDIO-n	22	1.8V (int.)	I,PU	Host interface selection	Low level activates the SDIO interface. 1.8V CMOS input[1]
Radio	ANT	12	VCC	RF	Antenna signal	Only available in LILY-W131
	ANT_SEL	15	VCC	O	Antenna diversity selection	Only available on LILY-W131. Inverted version of ANT_SEL-n
	ANT_SEL-n	16	VCC	O	Antenna diversity selection	Only available on LILY-W131. Inverted version of ANT_SEL
Other	NC	18, 20	-	-	Reserved	Do not connect

Table 3: LILY-W1 module pin definition, grouped by function

⚠ Do not apply any voltage to digital, control and radio signal groups while in Not Powered mode to avoid damaging the module.

1.3 Supply interfaces

1.3.1 Main supply inputs

The power for the LILY-W1 series modules must be supplied via the **VCC** and **VCC_IO** pin. All supply voltages used inside the modules are generated from the **VCC** through internal LDOs.

The current drawn by the LILY-W1 series through the **VCC** pins can vary by several orders of magnitude depending on operation mode and state. It can change from the high current consumption during Wi-Fi transmission at maximum RF power level in connected-mode, to the low current consumption during low power idle-mode with the power saving configuration enabled.

Detailed description on the electrical requirements of the supply voltages can be found in the LILY-W1 series data sheet [1].

Rail	Allowable Ripple (peak to peak)[2] over DC supply			Current consumption, active mode	Notes
	10-100 kHz	100 kHz-1 MHz	>1 MHz		
VCC	$50mV_{pk-pk}$	$40mV_{pk-pk}$	$20mV_{pk-pk}$	340 mA	MCS0, +17 dBm
VCC_IO	$50mV_{pk-pk}$	$40mV_{pk-pk}$	$20mV_{pk-pk}$	1.5 mA	

Table 4: Summary of voltage supply requirements

The LILY-W1 series modules are powered by one of the following DC supplies:

- Switching Mode Power Supply (SMPS)
- Low Drop Out (LDO) regulator

The SMPS is the ideal choice when the available primary supply source has higher value than the operating supply voltage of the LILY-W1 series modules. The use of SMPS provides the best power efficiency for the overall application and minimizes current drawn from the main supply source.

[1] When choosing SDIO bus for host communication, power consumption could be significantly lower compared to USB mode.

[2] Ripple measured on u-blox EVK's power connectors.

⚠ While selecting SMPS, ensure that AC voltage ripple at switching frequency does not violate the requirements specified in Table 4. Layout shall be implemented to minimize impact of high frequency ringing. See also Guidelines for VCC supply circuit design using a switching regulator.

The use of an LDO linear regulator is convenient for a primary supply with a relatively low voltage where the typical 85-90% efficiency of the switching regulator leads to minimal current saving. Linear regulators are not recommended for high voltage step-down as they will dissipate a considerable amount of energy.

Independent of the selected DC power supply for **VCC**, it is crucial that it can handle the high peak current generated by the module. It is recommended to provide at least 20% margin over the stated active current when designing the power supply for this module.

1.3.2 Power-up sequence

Figure 3 shows the recommended power sequence of the module. If the **PD-n** pin is driven by the host, it is recommended to apply 1 ms delay with respect to **VCC/VCC_IO** ramp-up. Otherwise, the **PD-n** can be left open; in this case, the module will handle power-on sequence by itself.

During power up of the LILY-W1 series module, it is a good practice to enable **VCC** first, followed by **VCC_IO** shortly after to reduce the inrush current from the main supply. It is suggested that the **PD-n** is held low during start up and be released when the power is stable or later, when the module must be turned on.

The **PD-n** signal is powered by **VCC** voltage domain.

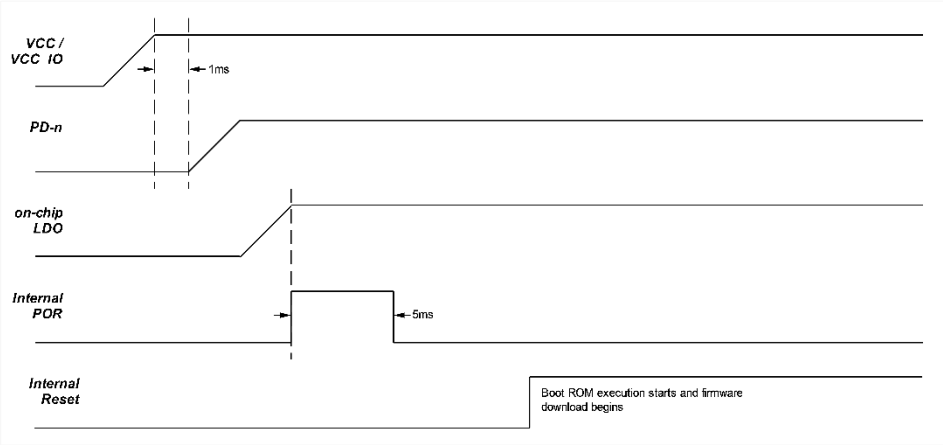

Figure 3: Recommended power sequence of LILY-W1 module

☞ Power down mode can only be entered by **PD-n** assertion from the host.

⚠ No specific sequence is required between VCC and VCC_IO rails. If the VCC supply cannot be enabled before the VCC_IO supply, then PD-n must be pulled low until all supplies are stable. It is recommended not to apply power to a single rail for an extended period of time.

1.4 System function interfaces

1.4.1 Module power-on

The power-on sequence of LILY-W1 series module can be initiated by applying the respective voltage to **VCC/VCC_IO** supply pins and releasing **PD-n** signal. An internal 47 kΩ pull-up resistor is available on this pin. Firmware download is required each time **PD-n** is de-asserted.

1.4.2 Module power-off

LILY-W1 modules can enter **Power Down** mode by asserting **PD-n** signal (logic level 0) or power on **VCC/VCC_IO** can be removed to enter **Power Off** mode.

1.4.3 Wake-Up signals

LILY-W1 modules provide two wake-up signals to handle the low power modes:

- **WAKE_UP**: Host-to-module Wake-Up signal from Deep Sleep mode (input).
- **HOST_WKUP**: Module-to-host Wake-Up signal can be used to exit host from Deep Sleep modes (output).

HOST_WKUP signal is powered by **VCC_IO** voltage domain.

WAKE_UP signal is powered by the **internal 1.8V** voltage domain.

Name	I/O	Description	Remark
WAKE_UP	I	Host-to-Module Wake-Up signal	Referenced to internal power domain.
HOST_WKUP	O	Module-to-Host Wake-Up signal	

Table 5: Wake-up signal definition

1.4.4 Configuration signals

LILY-W1 series module uses the **USB/SDIO-n** pin as host interface configuration input to set the desired operation mode following a Power on sequence. Strap configuration options are listed in Table 6.

USB/SDIO-n signal is powered by the internal 1.8 V voltage domain and is used to determine communication busses configuration and host-side drivers.

- **USB** mode (**USB/SDIO-n** pin not connected): Commands and data regarding Wi-Fi traffic will be transferred via the USB bus.
- **SDIO** mode (**USB/SDIO-n** pin grounded): Commands and data regarding Wi-Fi traffic will be transferred via the SDIO bus.

The designer must guarantee that the pin is properly set before the **PD-n** release.

Name	I/O	Description	Remarks
USB/SDIO-n	I	Interface selection pin	Referenced to internal power domain. Connect to ground for SDIO. Leave open for USB.

Table 6: LILY-W1 host interface selection

1.5 Data communication interfaces

The LILY-W1 modules support SDIO Full-Speed or USB 2.0 Device as host interfaces and the Wi-Fi traffic will always be communicated via one of these interfaces depending on the sampled value of **USB/SDIO-n** during module boot. See also Configuration signals.

1.5.1 SDIO interface

LILY-W1 modules support a SDIO device interface that conforms to the industry standard SDIO Full-Speed card specification and allows a host controller using the SDIO bus protocol to access the wireless module. A module acts as a device on the SDIO bus.

Main features of the SDIO device interface are:

- On-chip memory used for CIS
- Supports 1-bit and 4-bit SDIO transfer modes at the full clock range of 0 to 50 MHz
- Special interrupt register for information exchange
- Allows card to interrupt host

Table 7 summarizes the bus speed modes supported by the module.

Bus speed mode	Max. bus speed [MB/s]	Max. clock frequency [MHz]
High Speed	25	50
Default Speed	12.5	25

Table 7: SDIO supported rates

Pull-up resistors are required for all SDIO data and command lines. These pull-up resistors can be provided either externally on the host PCB or internally in the host application processor. Depending on the routing of the SDIO lines on the host, termination resistors in series to the lines might also be needed. See also SDIO.

Name	I/O	Description	Remarks
SD_CLK	I	SDIO Clock input	
SD_CMD	I/O	SDIO Command line	External PU required
SD_D0	I/O	SDIO Data line bit [0]	External PU required
SD_D1	I/O	SDIO Data line bit [1]	External PU required
SD_D2	I/O	SDIO Data line bit [2]	External PU required
SD_D3	I/O	SDIO Data line bit [3]	External PU required

Table 8: SDIO signal definition

The module's SDIO host interface pins are powered by the **VCC_IO** voltage domain.

1.5.2 USB 2.0 interface

The USB device interface is compliant with the USB 2.0 Specification [6]. The main features of the USB interface are:

- High/Full speed operation (480/12 Mbps)
- Suspend/host resume/device resume (remote wake-up)
- Built-in DMA engine to reduce interrupt loads on embedded processor and optimize bus bandwidth
- Support for Link Power Management (LPM), corresponding host resume, or device resume (remote wakeup) to exit from L1 sleep state.

Disturbance from the USB data signals routed on the host board can have influence on the RF performance and additional filtering may be needed. See also USB 2.0.

Name	I/O	Description	Remarks
USB_DP	I/O	USB Serial Data +	Differential signal
USB_DN	I/O	USB Serial Data -	Differential signal
USB_VBUS_ON	I	USB VBUS reference	Connect to **VCC** through a 33 kΩ resistor

Table 9: USB signal definition

⚠ If the USB interface is selected, VCC_IO only supports 3.3 V nominal supply range and must be tied to VCC.

The module's USB host interface pins are powered by the **VCC** voltage domain.

1.6 Antenna interfaces

The LILY-W1 module series provides two different antenna interfaces based on part number selection. The designer must follow the application notes in Appendix B for both versions of the module:

- LILY-W131 has a dedicated antenna pin that can be used to connect up to two antennas in diversity mode.
- LILY-W132 and LILY-W133 implements an internal antenna. The **ANT** pin is not connected in LILY-W132 and antenna diversity is not supported.

The following recommendations apply for developing an antenna interface for the LILY-W1 module:

- Where possible, consider integrating in the u-blox reference design in the end product to minimize the effort required associated with the certification process. For the full list of available reference designs, see also Appendix B.
- Good isolation must be provided between the various antennas in the system. Special care should be taken to maximize isolation between antennas operating in the same or nearby bands.

For information on how to properly design circuits that are compliant with these requirements, see also Antenna interface .

1.6.1 Approved antenna designs

LILY-W1 modules come with a pre-certified design that can be used to save costs and time during the certification process. To minimize this effort, the customer is required to implement antenna layout according to u-blox reference designs provided in Appendix B. u-blox can provide reference design source files on request.

The module has been tested and approved for use with the antennas listed in the LILY-W1 series data sheet [1].

The module may be integrated with other antennas. In this case, the OEM installer must certify his design with respective regulatory agencies.

For more information about the certification process, see also Regulatory compliance.

1.7 Other remarks

1.7.1 Unused pins

LILY-W1 modules have pins reserved for future use (**NC**) that must be left unconnected on the application board.

2 Design-in

2.1 Overview

For an optimal integration of LILY-W1 series modules in the final application board, it is recommended to follow the design guidelines described in this chapter. Every application circuit must be properly designed to guarantee the correct functionality of the related interface. However, a number of points require high attention during the design of the application device.

The following list provides important points, sorted by rank of importance and relevance, to be considered during the application design:

- Module antenna connection and layout: **ANT** pin for LILY-W131 and component/ground clearance for LILY-W132 and LILY-W133.

  Antenna circuit affects the RF compliance of the device integrating LILY-W1 modules with applicable certification schemes. For schematic and layout design recommendations, see Antenna interface.

- Module supply: **VCC**, **VCC_IO**, and **GND** pins.

  The supply circuit performance may affect the RF compliance of a device integrating LILY-W1 modules with applicable certification schemes. For schematic and layout design recommendations, see Supply interfaces.

- High speed interfaces: **SDIO** and **USB** pins.

  High speed interfaces can be a source of radiated noise and can affect the compliance with regulatory standards for radiated emissions. Follow the schematic and layout design recommendations in Data communication interfaces.

- System functions: **PD-n** and pins indicated as **Configuration signals**.

  Accurate design is required to guarantee that the voltage level is well defined during module boot. Follow the schematic and layout design recommendations in General high speed layout guidelines.

- Other pins: **specific signals** and **NC** pins.

  Accurate design is required to guarantee proper functionality. For schematic and layout design see Other interfaces and notes and follow the General high speed layout guidelines.

2.2 Antenna interface

LILY-W1 modules support the following RF interfaces for connecting the external antennas:

- The **ANT** port offers Wi-Fi connectivity in LILY-W131.
- LILY-W132 integrates an antenna on the module with an LTE coexistence filter.
- LILY-W133 integrates an antenna on the module.

The **ANT** port has a nominal characteristic impedance of 50 Ω and must be connected to the related antenna or RF switch through a 50 Ω transmission line to allow proper impedance matching along the RF path. A bad termination of the **ANT** pin may result in poor performance of the module.

For the diversity antenna configuration, the isolation between the two antennas should be maximized and the requirements specified in Table 10 and Table 11 should be followed to ensure good performance.

⚠ According to FCC regulations, the transmission line from the module's antenna pin to the antenna or antenna connector on the host PCB is considered part of the approved antenna design.

Therefore, module integrators must either follow exactly one of the antenna reference design used in the module's FCC type approval and detailed in Annex B or certify their own designs.

2.2.1 RF transmission line design (LILY-W131 only)

RF transmission lines such as the one from the **ANT** pin up to the related antenna connectors must be designed so that the characteristic impedance is as close as possible to 50 Ω. Figure 4 shows the design options and the main parameters to be taken into account when implementing a transmission line on a PCB:

- The microstrip (a track coupled to a single ground plane, separated by dielectric material),
- The coplanar microstrip (a track coupled to ground plane and side conductors, separated by dielectric material).
- The stripline (a track sandwiched between two parallel ground planes, separated by dielectric material).

The coplanar microstrip is the most common configuration for a printed circuit board (PCB).

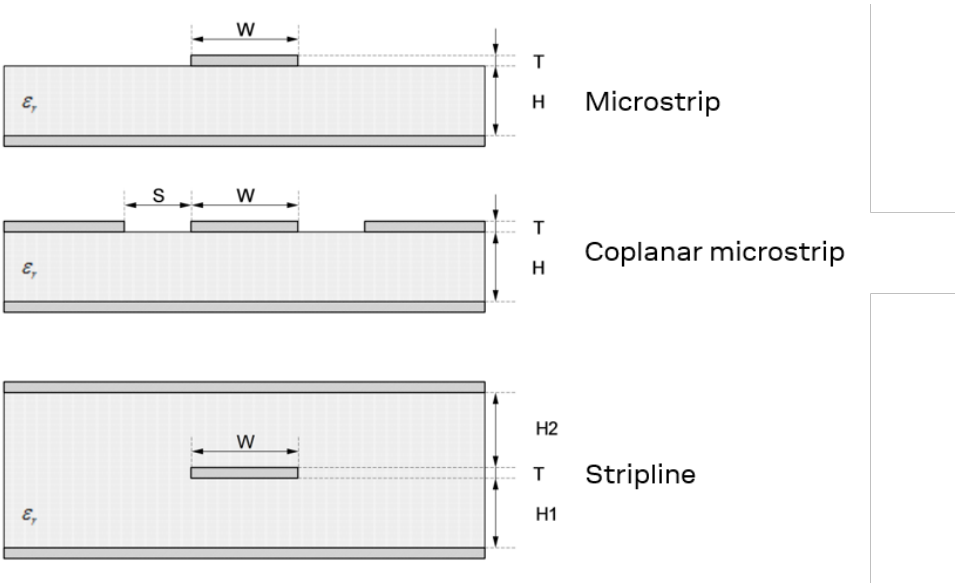

Figure 4: Transmission line trace design

To properly design a 50 Ω transmission line, the following remarks should be taken into account:

- The designer should provide enough clearance from surrounding traces and ground in the same layer; in general a trace to ground clearance of at least two times the trace width should be considered and the transmission line should be "guarded" by ground plane area on each side.
- The characteristic impedance can be calculated as first iteration using tools provided by the layout software. It is advisable to ask the PCB manufacturer to provide the final values that are usually calculated using dedicated software and available stack-ups from production. It could also be possible to request an impedance coupon on panel's side to measure the real impedance of the traces.
- FR-4 dielectric material, although its high losses at high frequencies can be considered in RF designs providing that:
    - RF trace length must be minimized to reduce dielectric losses.
    - If traces longer than few centimeters are needed, it is recommended to use a coaxial connector and cable to reduce losses.
    - Stack-up should allow for wide 50 Ω traces and at least 200 µm trace width is recommended to assure good impedance control over the PCB manufacturing process.

  - FR-4 material exhibits poor thickness stability and thus less control of impedance over the trace length. Contact the PCB manufacturer for specific tolerance of controlled impedance traces.
- For PCBs using components bigger than 0402 and dielectric thickness below 200 µm, it is recommended to add a keep-out (that is, clearance, a void area) on the ground reference layer below any pin present on the RF transmission lines to reduce parasitic capacitance to ground.
- The transmission lines width and spacing to GND must be uniform and routed as smoothly as possible: route RF lines in 45 ° angle.
- Add GND stitching vias around transmission lines as shown in Figure 5.
- Ensure solid metal connection of the adjacent metal layer on the PCB stack-up to main ground layer, providing enough vias on the adjacent metal layer as shown in Figure 5.
- Route RF transmission lines far from any noise source (as switching supplies and digital lines) and from any sensitive circuit to avoid crosstalk between RF traces and Hi-impedance or analog signals.
- Avoid stubs on the transmission lines, any component on the transmission line should be placed with the connected pin over the trace. Also avoid any unnecessary component on RF traces.

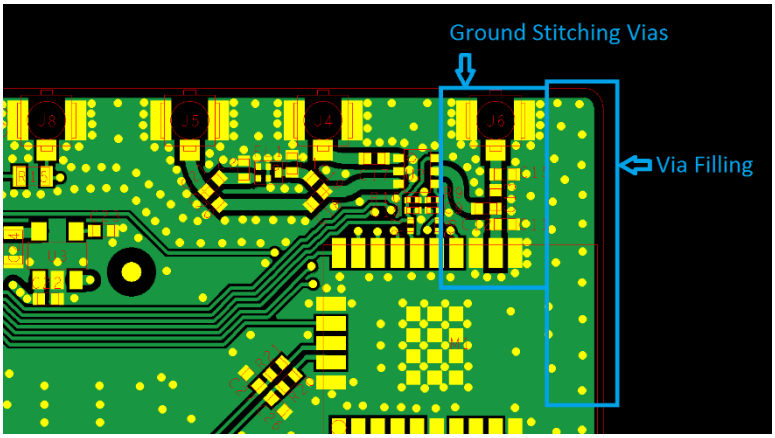

Figure 5: Example of RF trace and ground design from LILY-W1 Evaluation Kit (EVK)

2.2.2 Antenna design (LILY-W131 only)

Designers must take care of the antennas from all perspective at the very start of the design phase when the physical dimensions of the application board are under analysis/decision, since the RF compliance of the device integrating LILY-W1 module with all the applicable required certification schemes heavily depends on antennas radiating performance.

- External antennas such as linear dipole:
  - External antennas basically do not imply physical restriction to the design of the PCB where the module is mounted.
  - The radiation performance mainly depends on the antennas. It is required to select antennas with optimal radiating performance in the operating bands.
  - RF cables should be carefully selected with minimum insertion losses. Additional insertion loss will be introduced by low quality or long cable. Large insertion loss reduces radiation performance.
  - A high quality 50 Ω coaxial connector provides proper PCB-to-RF cable transition.

- Integrated antennas such as patch-like antennas:
    - Internal integrated antennas imply physical restriction to the PCB design:

      Integrated antenna excites RF currents on its counterpoise, typically the PCB ground plane of the device that becomes part of the antenna; its dimension defines the minimum frequency that can be radiated. Therefore, the ground plane can be reduced down to a minimum size that should be similar to the quarter of the wavelength of the minimum frequency that has to be radiated, given that the orientation of the ground plane related to the antenna element must be considered.

      The RF isolation between antennas in the system has to be as high as possible and the correlation between the 3D radiation patterns of the two antennas has to be as low as possible. In general, an RF separation[3] of at least a quarter wavelength between the two antennas is required to achieve a minimum isolation and low pattern correlation; increased separation should be considered, if possible, to maximize the performance and fulfil the requirements in Table 11.

      A numerical example to estimate the physical restriction on a PCB is shown below:

      Frequency = 2.4 GHz → Wavelength = 12.5 cm → Quarter wavelength = 3.125 cm[4]

- Radiation performance depends on the whole product and antenna system design, including product mechanical design and usage. Antennas should be selected with optimal radiating performance in the operating bands according to the mechanical specifications of the PCB and the whole product.

Table 10 summarizes the requirements for the antenna RF interface while Table 11 specifies additional requirements for dual antenna design implementation.

Item	Requirements	Remarks
Impedance	50 Ω nominal characteristic impedance	The impedance of the antenna RF connection must match the 50 Ω impedance of the **ANT** pin.
Frequency Range	2400 - 2500 MHz	For 802.11b/g/n and Bluetooth®.
Return Loss	S_{11} < -10 dB (VSWR < 2:1) recommended S_{11} < -6 dB (VSWR < 3:1) acceptable	The Return loss or the S_{11}, as the VSWR, refers to the amount of reflected power, measuring how well the primary antenna RF connection matches the 50 Ω characteristic impedance of the **ANT** pin. The impedance of the antenna termination must match as much as possible the 50 Ω nominal impedance of the **ANT** pin over the operating frequency range, maximizing the amount of the power transferred to the antenna.
Efficiency	> -1.5 dB (> 70%) recommended > -3.0 dB (> 50%) acceptable	The radiation efficiency is the ratio of the radiated power to the power delivered to antenna input: the efficiency is a measure of how well an antenna receives or transmits.
Maximum Gain	Refer to Section 5	The maximum antenna gain must not exceed the value specified in type approval documentation to comply with regulatory agencies radiation exposure limits.

Table 10: Summary of antenna interface requirements

[3] RF separation is the total dimension of the antenna element, including its grounding elements. It is at least half wavelength in size. Good separation is achieved with distances greater than 20 cm.
[4] Wavelength referred to a signal propagating over the air.

Item	Requirements	Remarks
Efficiency imbalance	< 0.5 dB recommended < 1.0 dB acceptable	The radiation efficiency imbalance is the ratio of the first antenna efficiency to the second antenna efficiency: the efficiency imbalance is a measure of how much better an antenna receives or transmits compared to the other antenna. The radiation efficiency of the antennas should be roughly the same.
Envelope Correlation Coefficient	< 0.4 recommended < 0.5 acceptable	The Envelope Correlation Coefficient (ECC) between one antenna and the other is an indicator of 3D radiation pattern similarity between the two antennas: low ECC results from antenna patterns with radiation lobes in different directions.

Item	Requirements	Remarks
Isolation (in-band)	S_{21} > 15 dB recommended S_{21} > 10 dB acceptable	The antenna-to-antenna isolation is the S_{21} parameter between the two antennas in the band of operation.
Isolation (out-of-band)	S_{21} > 35 dB recommended S_{21} > 30 dB acceptable	Out-of-band isolation is evaluated in the band of the aggressor to ensure that the transmitting signal from the other radio is sufficiently attenuated by the receiving antenna to avoid saturation and intermodulation effects at the receiver's port.

Table 11: Summary of antenna isolation requirements for Antenna Diversity applications on LILY-W131

Observe the following recommendations when selecting an external or internal antenna:

- Select antennas that provide optimal return loss (or VSWR) figure over all the operating frequencies.
- Select antennas that provide optimal efficiency figure over all the operating frequencies.
- Select antennas that provide appropriate gain not to exceed the regulatory limits specified in some countries such as by FCC in the United States, as mentioned in Regulatory compliance.
- Select antennas that can provide low Envelope Correlation Coefficient between each other.

2.2.2.1 RF connector design

If an external antenna is required, the designer should consider using a proper RF connector. It is the responsibility of the designer to verify the compatibility between plugs and receptacles used in the design.

Table 12 suggests some RF connector plugs that can be used by the designers to connect RF coaxial cables based on the declaration of the respective manufacturers. The Hirose U.FL-R-SMT RF receptacles (or similar parts) require a suitable mated RF plug from the same connector series. Due to wide usage of this connector, several manufacturers offer compatible equivalents.

Manufacturer	Series	Remarks
Hirose	U.FL® Ultra Small Surface Mount Coaxial Connector	Recommended
I-PEX	MHF® Micro Coaxial Connector	
Tyco	UMCC® Ultra-Miniature Coax Connector	
Amphenol RF	AMC® Amphenol Micro Coaxial	
Lighthorse Technologies, Inc.	IPX ultra micro-miniature RF connector	

Table 12: U.FL compatible plug connector

Typically, the RF plug is available as a cable assembly. Different types of cable assembly are available; the user should select the cable assembly best suited to the application. The key characteristics are:

- RF plug type: select U.FL or equivalent
- Nominal impedance: 50 Ω
- Cable thickness: Typically from 0.8 mm to 1.37 mm. Select thicker cables to minimize insertion loss
- Cable length: Standard length is typically 100 mm or 200 mm; custom lengths may be available on request. Select shorter cables to minimize insertion loss.
- RF connector on the other side of the cable: For example another U.FL (for board-to-board connection) or SMA (for panel mounting)

Consider that SMT connectors are typically rated for a limited number of insertion cycles. In addition, the RF coaxial cable may be relatively fragile compared to other types of cables. To increase application ruggedness, connect U.FL connector to a more robust connector such as SMA fixed on panel.

☞ A de-facto standard for SMA connectors implies the usage of reverse polarity connectors (RP-SMA) on end-user accessible Wi-Fi interfaces to increase the difficulty to replace the antenna with higher gain versions and exceed regulatory limits.

The following recommendations apply for proper layout of the connector:

- Strictly follow the connector manufacturer's recommended layout. Some examples are provided below:
    - SMA Pin-Through-Hole connectors require GND keep-out (that is, clearance, a void area) on all the layers around the central pin up to annular pins of the four GND posts.
    - U.FL surface mounted connectors require no conductive traces (that is, clearance, a void area) in the area below the connector between the GND land pins.
- In case of connector's RF pin size wider than the micro strip, remove the GND layer beneath the RF connector to minimize the stray capacitance thus keeping the RF line 50 Ω. For example, the active pin of UF.L connector must have a GND keep-out (also called "void area") at least on the first inner layer to reduce parasitic capacitance to ground.

2.2.2.2 Integrated antenna design

If integrated antennas are used, the transmission line is terminated by the antennas themselves. Follow the guidelines mentioned below:

- The antenna design process should start together with the mechanical design of the product. PCB mock-ups are useful in estimating overall efficiency and radiation path of the intended design during early development stages.
- Use antennas designed by an antenna manufacturer providing the best possible return loss (or VSWR).
- Provide a ground plane large enough according to the related integrated antenna requirements. The ground plane of the application PCB may be reduced down to a minimum size that must be similar to one quarter of wavelength of the minimum frequency that has to be radiated, however overall antenna efficiency may benefit from larger ground planes. Proper placement of the antenna and its surroundings is also critical for antenna performance. Avoid placing the antenna close to conductive or RF-absorbing parts such as metal objects or ferrite sheets as they may absorb part of the radiated power, shift the resonant frequency of the antenna or affect the antenna radiation pattern.
- It is highly recommended to strictly follow the specific guidelines provided by the antenna manufacturer regarding correct installation and deployment of the antenna system, including PCB layout and matching circuitry.

- Further to the custom PCB and product restrictions, antennas may require tuning/matching to reach the target performance. It is recommended to plan measurement and validation activities with the antenna manufacturer before releasing the end-product to manufacturing.
- The receiver section may be affected by noise sources like hi-speed digital busses. Avoid placing the antenna close to busses as DDR or consider taking specific countermeasures like metal shields or ferrite sheets to reduce the interference.
- Take care of interaction between co-located RF systems like LTE sidebands on 2.4GHz band. Transmitted power may interact or disturb the performance of LILY-W1 modules where specific LTE filter is not present (LILY-W131).

2.2.2.3 LTE coexistence filter selection

LILY-W131 does not include a band pass filter specifically designed to allow Wi-Fi coexistence with LTE-band7 modems. If a dedicated LTE filter is required on LILY-W131, the designer can refer to Table 13 for a list of recommended filters or consider parts with similar performance.

Manufacturer	Series	Part number	Remarks
TDK	B8343	B39242B8343P810	Requires external matching network (two inductors)
TDK	B9604	B39242B9604P810	Requires external matching network (one inductor)
TriQuint	885071	885071	Requires external matching network (two inductors)
TriQuint	885032	885032	
Avago	ACPF-7424	ACPF-7424	No external matching required
Taiyo Yuden	FBAR dev.	F6HF2G441AF46	Requires external matching network (two inductors)

Table 13: LTE filter, recommended part list

2.2.2.4 RF switch design

The LILY-W131 module also supports an antenna diversity solution with an external antenna switch (see application schematic example in Figure 6) to connect up to two antennas. The switch is controlled by **ANT_SEL** and **ANT_SEL-n** signals from LILY-W131; the suggested parts for switch and filtering are provided in Table 14.

The designers should follow those recommendations when including an RF switch in their design:

- **ANT_SEL** and **ANT_SEL-n** are hardware controlled and have inverted logic.
- Isolation between the two antennas should be maximized. See Table 11 for the specific requirements.
- The trace impedance from **ANT** pin (through the SPDT) switch to each antenna is 50 Ω as per all RF traces.
- RC network should be placed as close as possible to the SPDT switch.

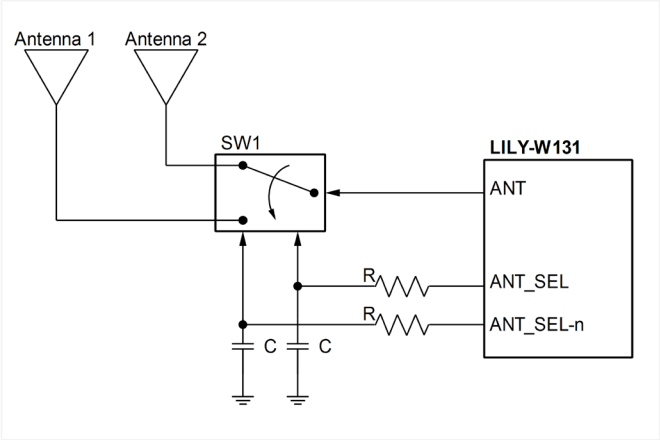

Figure 6: Diversity switch design

Reference designator	Description	Manufacturer	P/N
SW1	SPDT switch for RF applications, up to 3GHz	Skyworks	AS179-92LF
C	CAP, CER, 10pF ±5%, NP0, SMD	Generic	
R	RES, Thick film, 22Ω ±5%, SMD	Generic	

Table 14: Suggested part numbers for antenna diversity design

2.2.3 On-board antenna design (LILY-W132 and LILY-W133 only)

LILY-W132 and LILY-W133 includes the antenna on the module itself. This section provides guidelines to integrate the module into a host's PCB.

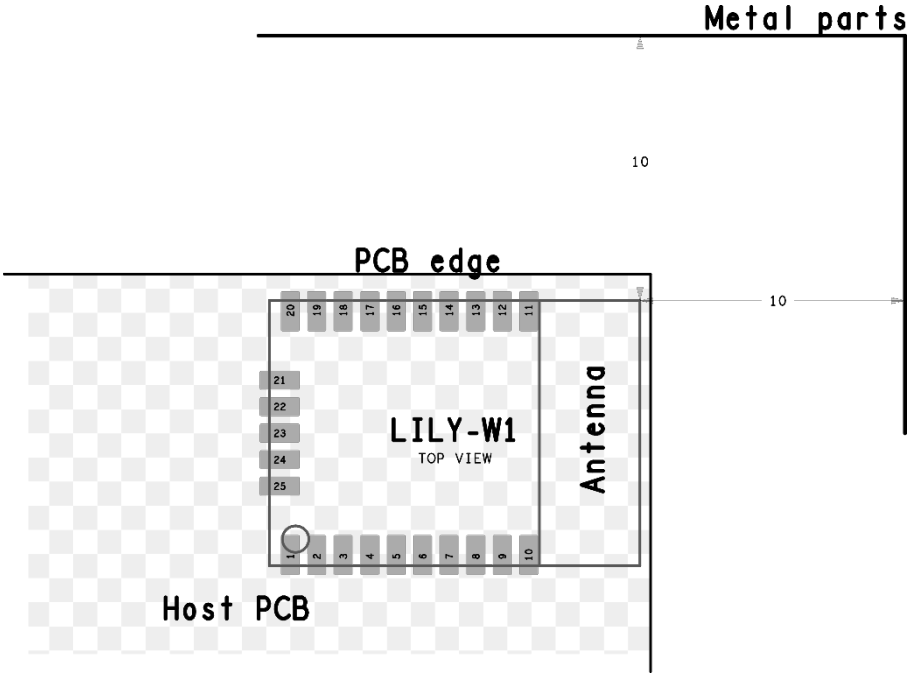

Figure 7: LILY-W132 and LILY-W133 PCB placement recommendation (dimensions are in mm)

A minimum clearance of 5 mm is recommended between the antenna and plastic parts of the casing. If metal parts are used in the end product, a minimum of 10 mm clearance is required between the antenna and those parts to avoid antenna detuning.

Recommended placement of LILY-W132 and LILY-W133 is on the PCB corner, as specified in Figure 7 (pin 11 of LILY-W132 and LILY-W133 is on corner side of the host PCB). The host PCB's ground plane shall be extended under the antenna and multiple vias should be used to connect the module ground pins to the PCB. A larger ground plane on host side also increases antenna efficiency.

The host PCB's ground plane can also be extended on the side of pin 11-20 with reduced impact on antenna performance.

2.3 Supply interfaces

2.3.1 Module supply design

Though the GND pins are internally connected, it is recommended to connect all the available ground pins to solid ground on the application board as a good (low impedance) connection to external ground can minimize power loss and improve RF and thermal performance. LILY-W1 modules must be sourced through **VCC** and **VCC_IO** pins with proper DC power supplies that comply with the requirements summarized in Table 4.

Good connection of the LILY-W1 series module power supply pins with DC supply source is required for accurate RF performance and schematic guidelines are summarized below:

- All power supply pins must be connected to an appropriate DC source.
- Any series component with Equivalent Series Resistance (ESR) greater than a few mΩ should be avoided. Only exceptions to this rule are ferrite beads used for DC filtering, however those parts should be used carefully to avoid instability of the DC/DC supply powering the module and are in general not required.
- A minimum bulk capacitance of 10 µF on **VCC** rail is required close to the module to help filter current spikes from the RF section. The preferred choice is a ceramic capacitor with X7R or X5R dielectric due to low ESR/ESL. Special care should be taken in the selection of X5R/X7R dielectrics due to capacitance derating vs DC bias voltage.
- Additional bypass capacitors in the range of 100 nF to 1 µF on all supply pins are required for high frequency filtering. The preferred choice is a ceramic capacitor with X7R or X5R dielectric due to low ESR/ESL. Smaller size bypass capacitors should be chosen for the manufacturing process to minimize ESL.

2.3.1.1 Guidelines for VCC supply circuit design using a switching regulator

It is recommended to use a Switching Mode Power Supply (SMPS) when the difference from the available supply rail to the **VCC** rail allows significant power savings. For example, conversion of a 12 V or greater voltage supply to the nominal 3.3 V value for the **VCC** supply.

The characteristics of the SMPS connected to the **VCC** pin should meet the following prerequisites to comply with the module requirements summarized in Table 4.

- **Power capability:** The switching regulator together with any additional filter in front of the module must be capable of providing a voltage value within the specified operating range, and must be capable of delivering the specified peak current.
- **Low output ripple**: The switching regulator must be capable of providing a peak-to-peak Voltage ripple within the specified limits. This requirement applies both to voltage ripple generated by SMPS operating frequency and to high frequency noise generated by power switching.
- **PWM/PFM mode operation**: It is preferable to select regulators with fixed Pulse Width Modulation (PWM) mode. Pulse Frequency Modulation (PFM) mode typically exhibits higher ripple and may affect RF performance. If power consumption is not a concern, PFM/PWM mode transitions should be avoided in favor of fixed PWM operation to reduce the peak-to-peak noise on voltage rails. Switching regulators with mixed PWM/PFM mode can be used provided that the PFM/PWM modes and transition between modes complies with the requirements.

2.3.1.2 Guidelines for supply circuit design using a Low Drop-Out (LDO) linear regulator

The use of a linear regulator is suggested when the difference from the available supply rail and the **VCC** or **VCC_IO** value is relatively low. The linear regulators provide acceptable efficiency when transforming a supply of less than 5 V to a voltage value within the normal operating range of the module. A linear regulator can be also considered to power the **VCC_IO** section due to the low current requirements, especially if cascaded from a SMPS-generated low voltage rail.

The characteristics of the Low Drop-Out (LDO) linear regulator used to power the voltage rails must meet the following prerequisites to comply with the requirements summarized in Table 4.

- **Power capabilities**: The LDO linear regulator with its output circuit must be capable of providing a voltage value to the **VCC** or **VCC_IO** pins within the specified operating range and must be capable of withstanding and delivering the maximum specified peak current while in connected-mode.
- **Power dissipation**: The power handling capability of the LDO linear regulator must be checked to limit its junction temperature to the rated operating range. The worst-case junction temperature can be estimated as shown below:

$$T_{j,est} = (V_{in} - V_{out}) * I_{avg} * \theta_{ja} + T_a$$

  Where: θ_{ja} is the junction-to-ambient thermal resistance of the LDO's package[5], I_{avg} is the current consumption of the given voltage rail in continuous TX/RX mode and T_a is the maximum operating temperature of the end product inside the housing.

2.4 Data communication interfaces

2.4.1 SDIO

The SDIO bus can support a clock frequency up to 50 MHz and thus requires special care to guarantee signal integrity requirements are met and EMI issues are minimized. The signals should be routed with a single ended impedance of 50 Ω.

It is recommended to route all signals in the bus with similar length and have appropriate grounding in the surrounding layers; total bus length should also be minimized. The layout of the SDIO bus should be done so that crosstalk with other parts of the circuit is minimized providing adequate isolation between the signals, the clock and the surrounding busses/traces. Figure 8 shows the suggested application schematic for the SDIO bus in LILY-W1 modules while Table 15 summarizes the electrical requirements of the bus.

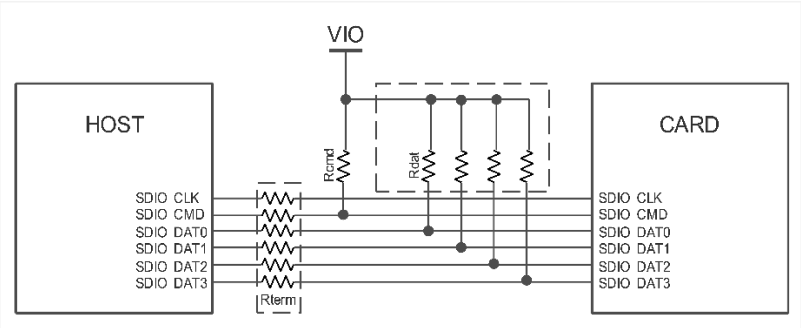

Figure 8: SDIO application schematic

[5] Thermal dissipation capability reported on datasheets is usually tested on a reference board with adequate copper area (ref. to JESD51 [13]). Junction temperature on a typical PCB may be higher than the estimated value due to the limited space to dissipate the heat. Thermal reliefs on pads also affect the capability of a device to dissipate the heat.

☞ A small value capacitor in the range of few pF should be considered in parallel to SDIO_CLK as EMI debug option and signal termination. This capacitor should be placed as close as possible to the LILY-W1 clock input pin and can be assembled only for EMI purpose. The capacitor value adds to total line capacitance and must not exceed total allowed capacitance to avoid violation of clock rise and fall timing specifications.

Signal Group	Parameter	Min.	Typ.	Max.	Unit
CLK, CMD, DAT[0:3]	Single ended impedance, Z_0		50		Ω
CLK, CMD, DAT[0:3]	Impedance control	$Z_0 - 10\%$	Z_0	$Z_0 + 10\%$	Ω
DAT[0:3]	Pull-Up range, Rdat	10	47	100	kΩ
CMD	Pull-Up range, Rcmd	10	10	50	kΩ
CLK, CMD, DAT[0:3]	Series termination (host side), Rterm[6]	0	0		Ω
CLK, CMD, DAT[0:3]	Bus length[7]			200	mm
CMD, DAT[0:3]	Bus skew length mismatch to CLK	-15		+15	mm
CLK	Center to center CLK to other SDIO signals[8]	4 w			
CMD, DAT[0:3]	Center to center between signals[9]	3 w			

Table 15: SDIO bus requirements

2.4.2 USB 2.0

The USB bus of LILY-W1 series supports Hi-Speed connectivity with a transfer rate of 480 Mb/s. USB differential data pair is a controlled impedance bus and the main parameters considered for the track impedance calculation are depicted in Figure 9.

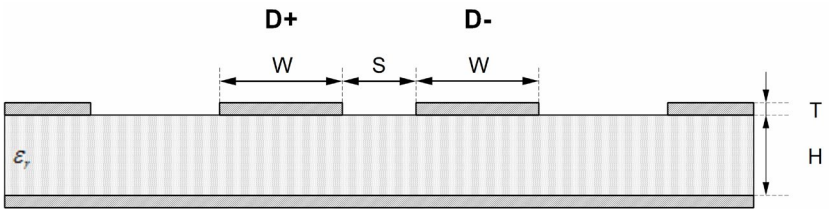

Figure 9: USB differential pair, controlled impedance parameters

The USB data lines must follow the recommendations stated in Table 16 to guarantee bus signal integrity and avoid EMI issues.

Signal Group	Parameter	Min.	Typ.	Max.	Unit
USB differential data	Single Ended impedance, Z_{SE}	45			Ω
	Differential impedance, Z_{diff}		90		Ω
	Common mode impedance, Z_{CM}		30		Ω
	Impedance control, Z_{SE}, Z_{diff}, Z_{CM}	$Z_0 - 10\%$	Z_0	$Z_0 + 10\%$	
	Shunt capacitance to GND			5	pF
	Bus skew length mismatch between differential pair		0	15[10]	mm
	Isolation to other signals	4 w			

Table 16: USB bus requirements

[6] Series termination values larger than typical only recommended for addressing EMI issues.
[7] Routing should minimize total bus length.
[8] Center to center spacing requirement can be ignored for up to 10 mm of routed length to accommodate BGA escape.
[9] Center to center spacing requirement can be ignored for up to 10 mm of routed length to accommodate BGA escape.
[10] Total mismatch includes skew introduced by cable and host side routing, keep it at minimum if USB bus is routed on a connector.

☞ USB data signals routed on the host board can have influence on the RF performance and shunt capacitors or ESD protection filter to GND may be needed to reduce in-band noise from USB harmonics.

If the USB data link is routed on a connector, the designer is encouraged to consider a common mode choke and ESD protections on USB lines as options. Common mode chokes should be considered only in case of EMI issues as they cause signal degradation. For more information about proper selection of ESD protections see also the ESD guidelines.

2.5 Other interfaces and notes

All pins have internal keeper resistors; leave it open if not used.

2.6 General high speed layout guidelines

These general design guidelines are considered as best practices and are valid for any bus present in the LILY-W1 modules. The designer should prioritize the layout of higher speed busses. Low frequency signals are generally not critical for layout.

⚠ One exception is represented by High Impedance traces (such as signals driven by weak pull-resistor) that may be affected by crosstalk. For those traces, a supplementary isolation of 4w from other busses is recommended.

2.6.1 General considerations for schematic design and PCB floor-planning:

- Verify which signal bus requires termination and add series resistor terminations to the schematics.
- Carefully consider the placement of the module with respect to antenna position and host processor; RF trace length should be minimized first, followed by SDIO/USB bus length.
- SDIO/USB bus routing should be planned to minimize layer-to-layer transition to a minimum.
- Verify with PCB manufacturer allowable stack-ups and controlled impedance dimensioning for antenna traces and busses.
- Verify that the power supply design and power sequence are compliant with LILY-W1 specification, as described in Supply interfaces.

2.6.2 Component placement

- Accessory parts like bypass capacitors should be placed as close as possible to the module to improve filtering capability, prioritizing the placement of the smallest size capacitor close to module pins.
- Particular care should be taken not to place components close to the antenna area. The designer should carefully follow the recommendations from the antenna manufacturer about the distance of the antenna vs. other parts of the system. The designer should also maximize the distance of the antenna to Hi-frequency busses like DDRs and related components or consider an optional metal shield to reduce interferences that could be picked up by the antenna thus reducing the module's sensitivity.

2.6.3 Layout and manufacturing

- Avoid stubs on high-speed signals. Test points or component pads should be placed over the PCB trace.
- Verify the recommended maximum signal skew for differential pairs and length matching of buses.
- Minimize the routing length; longer traces will degrade signal performance. Ensure that maximum allowable length for high-speed busses is not exceeded.

- Ensure to track your impedance matched traces. Consult early with your PCB manufacturer for proper stack-up definition.
- RF, analog and digital sections should have dedicated and clearly separated areas on the board.
- No digital routing is allowed in the GND reference plane area of RF traces (ANT pin and Antenna).
- Is strongly recommended to avoid digital routing beneath all layers of RF traces.
- Ground cuts or separation are not allowed below the module.
- Minimize the length of the RF traces as first priority. Then, minimize bus length to reduce potential EMI issues from digital busses.
- All traces (Including low speed or DC traces) must couple with a reference plane (GND or power), Hi-speed busses should be referenced to the ground plane. In this case, if the designer needs to change the ground reference, an adequate number of GND vias must be added in the area of transition to provide a low impedance path between the two GND layers for the return current.
- Hi-Speed busses are not allowed to change reference plane. If a reference plane change is unavoidable, some capacitors should be added in the area to provide a low impedance return path through the different reference planes.
- Trace routing should keep a distance greater than 3w from the ground plane routing edge.
- Power planes should keep a distance from the PCB edge sufficient to route a ground ring around the PCB, the ground ring must then be connected to other layers through vias.

⚠ The heat dissipation during continuous transmission at maximum power can significantly raise the temperature of the application baseboard below the LILY-W1 series modules. Avoid placing temperature sensitive devices close to the module and provide adequate grounding to transfer the generated heat to the PCB.

2.7 Module footprint and paste mask

Figure 10 describes the pin layout for the LILY-W1 series module. The proposed land pattern layout reflects the pin layout of the module. Both Solder Mask Defined (SMD) and Non Solder Mask Defined (NSMD) pins can be used, however the following considerations apply:

- Pins from 1 to 25 should be NSMD.
- Inner pins must have a good thermal bonding to PCB ground planes to help spreading the heat generated by the module.
- If NSMD design is chosen for inner pins, thermal reliefs should be considered and vias added on those pins for heat sinking. Those vias may require copper capping.
- If SMD design is chosen for inner pins, the land pattern can be flooded on a ground plane beneath the module and vias added around the pins for heat sink.

The suggested paste mask layout follows the copper mask layout.

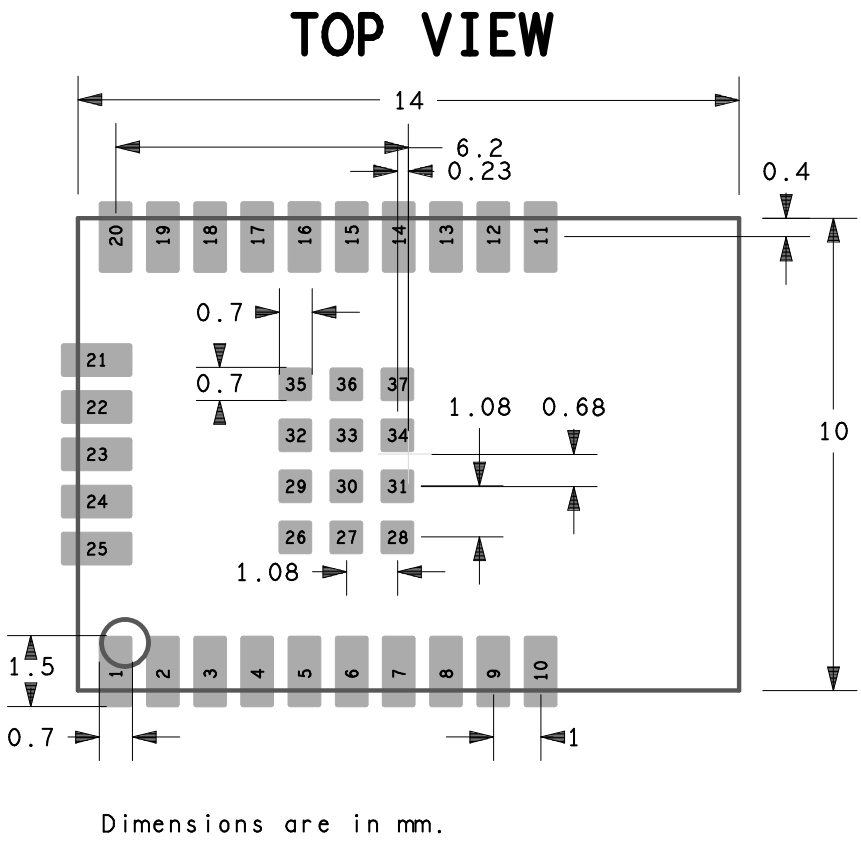

Figure 10: Recommended footprint for LILY-W1 module

⚠ The exact mask geometries, distances and stencil thicknesses must be adapted to the specific production process of the customer.

2.8 Thermal guidelines

The LILY-W1 series modules have been successfully tested from -40°C to +85°C ambient temperature. The board will generate heat during high loads that must be dissipated to sustain the lifetime of the components.

The improvement of the module's thermal dissipation will decrease its internal temperature, thus increasing the long-term reliability of the device for applications operating at high ambient temperature.

Recommended layout for best performance should follow the guidelines listed below:

- Vias specification for ground filling: 300/600 µm, no thermal reliefs are allowed on vias
- Ground vias density under the module: 50 vias/cm^2
- Minimum layer count and copper thickness: 4 layers, 35 µm
- Minimum board size: 25x35 mm
- Power planes and signal traces should not cross the layers beneath the module to maximize heat flow from the module.

Additional hardware techniques can be used to improve the thermal performance of the module in customer's applications:

- Maximize antenna's return loss to reduce reflected RF power to the module.

- Improve the efficiency and the thermal design of any component that generates heat in the application, including power supplies and processor, to spread the generated heat distribution over the application device.
- Properly design the mechanical enclosure of the application device to provide ventilation and good thermal dissipation.
- For continuous operation at high temperatures, it is recommended to include a heat sink component on the PCB's bottom side, connected through electrically insulated / high thermal conductivity adhesive[11].

2.9 ESD guidelines

LILY-W1 module is manufactured through a highly automated process, which complies with IEC61340-5-1 [9] (STM5.2-1999 Class M1 devices) standard. A manufacturing process on customer's manufacturing site that implements a basic ESD control program is considered sufficient to guarantee the necessary precautions[12] for handling the modules. The ESD ratings of LILY-W1 module pins are stated in Table 17.

Applicability		Immunity level
All pins except **ANT**	Human Body Model (HBM), ANSA/ESDA/JEDEC JS-001-2014.	±2000 V
	Charged Device Model (CDM), JESD22-C101.	±500 V
ANT pin and Internal antenna	Human Body Model (HBM), ANSA/ESDA/JEDEC JS-001-2014.	±300 V
	Charged Device Model (CDM), JESD22-C101.	±600 V

Table 17: ESD immunity rating for pins of LILY-W1 module

The designer must implement proper measures to protect from ESD events on any pin that may be exposed to the end user in compliance with the following European regulations.

- ESD testing standard CENELEC EN 61000-4-2 [7]
- Radio equipment standard ETSI EN 301 489-1 [8]

The minimum requirements as per these European regulations are summarized in Table 18.

Application	Category	Immunity level
All exposed surfaces of the radio equipment and ancillary equipment in a representative configuration of the end product.	Contact Discharge	4 kV
	Air Discharge	8 kV

Table 18: Minimum ESD immunity requirements based on EN 61000-4-2

Compliance with standard protection level as specified in EN 61000-4-2 [7] can be achieved by including proper ESD protections in parallel to the line, close to areas accessible by the end user.

⚠ Special care should be taken if the ANT or RF switch pins must be protected by choosing an ESD protection with adequate parasitic capacitance. For 2.4 GHz operation, a protection with maximum internal capacitance of 0.25 pF is recommended.

⚠ If the PD-n pin is not properly routed on the host board, it can trigger a module power cycle during ESD events. It is recommended to include on this line an optional 10 nF capacitor to GND and 100 kΩ pull-up resistor to VCC to improve the immunity against ESD events.

[11] This is in general not required.

[12] Minimum ESD protection level for safe handling is specified in JEDEC JEP155 (HBM) and JEP157 (CDM) for ±500 V and ±250 V respectively.

2.10 Design-in checklist

2.10.1 Schematic checklist

- ☐ LILY-W1 module pins are properly numbered and designated on the schematic (including inner ground pins).
- ☐ Power supply design complies with the specification.
- ☐ The power sequence (including **PD-n** signal handling) is properly implemented.
- ☐ Adequate bypassing is present in front of each power pin.
- ☐ Each signal group is consistent with its own power rail supply or proper signal translation has been provided.
- ☐ Configuration pins are properly set at bootstrap.
- ☐ SDIO bus includes series resistors and pull-ups.
- ☐ Unused pins are properly terminated.
- ☐ A pi-filter is provided in front of each antenna for final matching.
- ☐ RF co-location additional filters have been considered in the design.

2.10.2 Layout checklist

- ☐ PCB stack-up and controlled impedance traces follow PCB manufacturer's recommendation.
- ☐ All pins are properly connected and the package follows u-blox's recommendations for pin design.
- ☐ Proper clearance has been provided between RF section and digital section.
- ☐ Proper isolation has been provided between Antennas (RF co-location, diversity or multi-antenna design).
- ☐ Bypass capacitors are placed close to the module.
- ☐ Low impedance power path has been provided to the module.
- ☐ Controlled impedance traces are properly implemented on the layout (both RF and digital) and follow PCB manufacturer recommendations.
- ☐ 50 Ω RF traces and connectors follow the rules in Antenna design (LILY-W131 only).
- ☐ Antenna design has been reviewed by the antenna manufacturer.
- ☐ Proper grounding has been provided to the module for low impedance return path and heat sink.
- ☐ Reference plane skipping has been minimized for high frequency busses.
- ☐ All traces and planes are routed inside the area defined by the main ground plane.
- ☐ u-blox has reviewed and approved the PCB[13].

[13] This is applicable only for end-products based on u-blox reference designs.

3 Software

The LILY-W1 module series is based on the NXP 88W8801 chipset and it supports Wi-Fi 802.11b/g/n simultaneous client/station, access point, and Wi-Fi Direct operations. The LILY-W1 modules connect to the host processor either through an SDIO 2.0 or USB 2.0 device interface.

From the software point of view, the LILY-W1 series modules contain only calibration data and basic operation settings in an on-board non-volatile memory and thus require a host-side driver and a firmware to run. Each base software package contains the following:

- A firmware image that has to be downloaded to the module on system start
- A driver, which is placed between the bus driver and the attached network stacks

Various control tools are also included optionally.

☞ An Yocto/OpenEmbedded meta layer, which includes recipes for integrating the drivers into Yocto-based projects, can be provided on request by u-blox.

3.1 Available software packages

3.1.1 Open-source Linux/Android drivers

LILY-W1 series modules are based on the NXP 88W8801 chipset. The drivers and firmware required to operate LILY-W1 series modules are developed by NXP and are already integrated into the Linux BSP for the NXP i.MX application processors [16].[14]

The documentation for the software releases from NXP contains Wi-Fi and Bluetooth release notes and a list of supported software features. The driver source code is provided free of charge as open source under NXP license terms. Being open source allows the drivers to be integrated or ported to other non-NXP based host platforms. Yocto recipes for the driver (`nxp-wlan-sdk`, `kernel-module-nxp89xx`) and firmware (`linux-firmware`), that can be used to develop custom Linux-based systems, are part of the NXP i.MX Linux BSP.

The latest version of the driver source code and Wi-Fi/Bluetooth firmware are available from the following open-source repositories:

- Wi-Fi driver: https://source.codeaurora.org/external/imx/mwifiex/
- Firmware: https://github.com/NXP/imx-firmware/
- i.MX meta-layer: https://source.codeaurora.org/external/imx/meta-imx/

☞ Use the repository branches matching to the latest Linux BSP release version. At the time of publication, this is release 5.15.5_1.0.0.

The Wi-Fi driver uses the TCP/IP stack from the Linux kernel for data transmission and the `cfg80211` subsystem in the kernel for configuration and control. For further information about initialization and configuration of the Wi-Fi and Bluetooth features, see also the NXP User Manual UM11490 [17].

3.1.2 MCUXpresso SDK

The MCUXpresso SDK is a comprehensive software enablement package for MCU devices from NXP. It includes production-grade software with optionally integrated real-time operation systems (RTOS), integrated enabling software technologies (stacks and middleware), reference software, and more. The SDK includes the Wi-Fi driver and firmware for LILY-W1 series modules for supported NXP MCUs. MCUXpresso Wi-Fi support for NXP 88W8801 chipset in LILY-W1 is currently available for FreeRTOS™ real-time operation system.

[14] Only the SDIO host interface is currently supported by the NXP open-source drivers

3.1.3 Proprietary drivers

Proprietary NXP reference drivers for the LILY-W1 series modules are currently available for Linux and Android operating systems as SDIO or USB driver versions. The drivers are usually released for a single reference host platform and operating system version, but these can be easily ported to comparable platforms. We recommended that you use the latest available host interface driver version and port this to the used operating system version.

⚠ The Software section of this manual describes only the NXP proprietary reference drivers, which can be obtained through u-blox support. The "mwifiex" open-source drivers that are distributed with the mainline Linux kernel are not officially supported by u-blox.

☞ For a list of the supported driver features, see the release notes bundled with each driver release.

☞ The proprietary drivers, developed by NXP and distributed by u-blox, are only made available to customers that have signed a limited use license agreement (LULA) [4] with u-blox. A valid non-disclosure agreement (NDA) is mandatory to get the driver packages directly from NXP

3.2 Supported kernel versions

Due to constant changes in the kernel subsystem APIs for different kernel releases, the provided reference drivers have to be modified for every major and minor kernel release.

The driver packages have been verified on the following platforms and kernel versions only:

Platform	SoC	Kernel Version
I.MX 6SoloX Sabre board (smart devices)	imx6 SoloX (NXP former freescale)	3.14.52 4.1.15
EVK-W16 (ELIN-W160) (ublox AG)	Sitara AM3352 (Texas Instruments)	3.17.8 3.19.8
Ixora Apalis TK1 (Toradex AG)	NVIDIA Tegra K1 (NVIDIA)	3.10.40
Laptop Fedora Core 18	x86	3.10.11
EVK-MIMXRT1060	MIMXRT1062 processor	MCUXpresso SDK 2.8.0

Table 19: Tested Linux kernel versions for the LILY-W1 series modules reference drivers

The provided software packages might support the latest kernel versions as long as there is no change in the used kernel API. If there are any changes to the used kernel APIs, then make necessary changes using patches of the provided software packages.

For additional information, contact the respective support team for your area as mentioned in the Contact section.

☞ Support for LILY-W1 modules is provided in the out of the box SDK for some of the i.MX RT Crossover MCUs developed by NXP. For further information about the specifications and integration procedure see the link in [15].

3.3 Driver and firmware architecture

The software for the LILY-W1 modules is split into the following parts:

- The Wi-Fi driver, running on the host system
- The device firmware, which runs on the module itself

The host drivers interface with the SDIO or USB bus drivers and upper layer protocol stacks of the Linux/Android system. The basic architecture of the Wi-Fi driver is typical of a thick firmware architecture, where the Wi-Fi firmware handles all 802.11 MAC management tasks. Figure 11 shows the basic driver and firmware architecture.

The following steps are performed while loading the Wi-Fi host driver:

- The driver registers itself with the MMC/SDIO or USB bus driver.
- Upon successful registration, the bus driver calls the Wi-Fi driver's probe handler, when the module is detected.
- The probe handler allocates and initializes internal structures, registers the interrupt service routine and starts the main driver threads.
- The firmware image is downloaded to the module and the hardware is initialized.
- Network devices such as STA, AP, and WFD are registered.

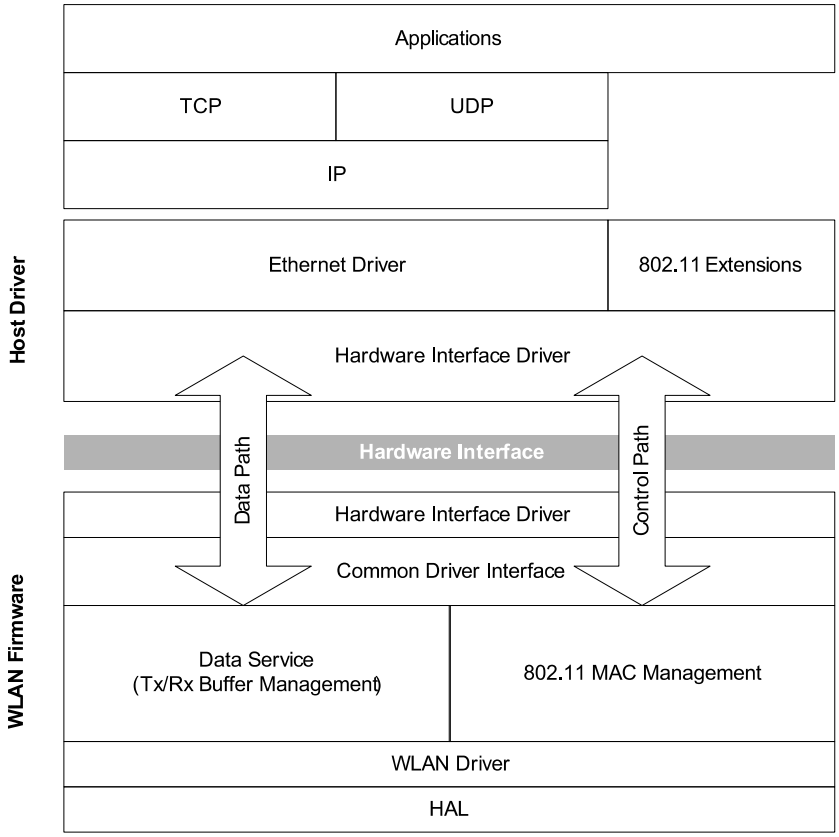

Figure 11: Basic Wi-Fi driver and firmware architecture

3.4 Compiling the drivers

3.4.1 Prerequisites

3.4.1.1 Reference drivers

The versions of the NXP reference drivers/firmware package and the Linux OS described in the Software chapter include:

- NXP Linux reference driver SD-UAPSTA-8801-FC18-MMC-14.85.36.p101-C3X14160_B0-GPL
- Linux kernel 3.19.8

☞ The instruction procedures for compiling and using the USB driver version are similar to those for the SDIO version. The main differences between the different driver versions are highlighted in this document, if applicable.

The drivers support Linux kernel versions from 2.6.13 to 4.2. Older or more recent kernels can require some patches due to the changed kernel APIs. Patches for the u-blox EVK-W16 reference platform, which is currently running a 3.19.8 kernel, can be provided on request.

☞ The reference drivers for the LILY-W1 module series are developed by NXP and can be re-distributed to u-blox customers that have signed a license agreement [4].

3.4.1.2 Kernel configuration

According to the used host interface, the drivers for the LILY-W1 series modules depend on the MMC/SDIO or the USB stack of the Linux kernel; thus, the respective stack must be enabled on the target system. For configuration, the Linux reference driver supports the following two driver API options:

- The old Linux wireless extensions (WEXT) interface
- The new cfg80211 configuration API

To enable these APIs on the target system, the following must be selected in the kernel configuration (`CONFIG_WIRELESS_EXT` cannot be selected directly, so a driver that depends on it, such as `hostap` or *`zd1201`* must be selected):

```
CONFIG_WIRELESS_EXT=y
CONFIG_WEXT_PRIV=y
CONFIG_CFG80211=y
```

Listing 1: Kernel .config

⚠ For older kernels (<3.2), use compat-wireless (now named as backports) to provide recent versions of the kernel's 802.11 APIs to support all the driver features. In this case, cfg80211 has to be compiled as a module (CONFIG_CFG80211=m).

3.4.2 Extracting the package content

The NXP driver package contains the firmware image, the Wi-Fi driver sources and also a release notes document that describes the tested hardware platform, supported features, bug fixes and known limitations of the release. The package comes as several archives that are packed into each other. Follow the steps mentioned below to extract the NXP driver package:

```
unzip SD-UAPSTA-8801-FC18-MMC-14.85.36.p101-C3X14160_B0-GPL-Release.zip
tar xf SD-UAPSTA-8801-FC18-MMC-14.85.36.p101-C3X14160_B0-GPL.tar
for i in *.tgz; do tar xzf $i; done
```

Once you remove the archives, you should find something similar to the following in your working directory:

```
├── FwImage/
│   └── sd8801_uapsta.bin         # SDIO firmware image (USB version: usb8801_uapsta.bin)
└── SD-8801-FC18-MMC-14.85.36.p101-C3X14160_B0-GPL/
    └── wlan_src/                 # Wi-Fi driver and tools sources
        ├── Makefile              # Driver/tools Makefile
        ├── mapp/                 # User space tools for configuration, sample configuration files
        ├── mlan/                 # OS independent driver sources
        ├── mlinux/               # Linux specific driver sources
        └── [...]
```

3.4.3 Compile-time configuration

The Wi-Fi driver has several compile-time configuration options that can be set in the driver's Makefile. Change to the `wlan_src` subdirectory and ensure that the following are enabled:

```
[…]
# Enable STA mode support
CONFIG_STA_SUPPORT=y
# Enable uAP mode support
CONFIG_UAP_SUPPORT=y
# Manufacturing firmware support
CONFIG_MFG_CMD_SUPPORT=y
[…]
```

The manufacturing firmware support is required, if the driver is used with the "Manufacturing and Labtools "packages, which can be used for setting up the test modes for certification [3].

3.4.4 Building

3.4.4.1 Prepare kernel sources

Primarily, ensure that your kernel is prepared for compiling external kernel modules. For this, change to the kernel's source directory and run the following:

```
make modules_prepare
```

"`make modules_prepare`" will not build `Module.symvers` even if CONFIG_MODVERSIONS is set; therefore, a full kernel build must be executed to make the module versioning work.

3.4.4.2 Wi-Fi driver and tools

To compile the Wi-Fi drivers and tools, go to the driver packages's `wlan_src` subdirectory and run "`make build`". For cross-compilation, you should specify the target architecture, cross-toolchain prefix and the directory with the kernel sources used to build the kernel on the target system, that is:

```
# e.g.:
# ARCH=arm
# CROSS_COMPILE= arm-poky-linux-gnueabi-
# KERNELDIR=~/elin-w160-evk/build/tmp/sysroots/elin-w160-evk/usr/src/kernel/

make ARCH=${ARCH} CROSS_COMPILE=${CROSS_COMPILE} KERNELDIR=${KERNELDIR} build
```

This command will build the Wi-Fi kernel modules and all the included user space applications. The build results will be copied to `../bin_sd8801/` (or `../bin_usb8801` in case of USB driver), relative to the `wlan_src` directory. The following table summarizes the content of the Wi-Fi build results directory:

File	Description
mlan.ko, sd8801.ko/usb8801.ko	Wi-Fi driver kernel modules
README*	Usage instructions for the provided tools
config/*	Sample configuration files used by various tools
uaputl.exe	Micro-AP configuration tool
mlanutl	Configuration tool for additional driver parameters
mlanevent.exe	Netlink event listener
mlan2040coex	802.11 20/40 MHz coexistence handler

Table 20: Content of the Wi-Fi build results directory

3.5 Deploying the software

The following steps describe how to install the drivers, firmware and provided tools on the target system:

1. Copy the application binaries to an appropriate location on the target file system and add it to the `$PATH` environment variable, if required.
2. The kernel modules should be copied to somewhere below the modules directory of the kernel, for example, `/lib/modules/3.19.8/updates/`. Run the `depmod` command afterwards to update the module dependencies and to have the modules findable by the *modprobe* utility.
3. Copy the firmware image file `sd8801_uapsta.bin` (or `usb8801_uapsta.bin`) from the driver package's `FwImage` directory to the directory `/lib/firmware/mrvl/` on the target file system.

An example deployment is shown below:

```
/
├── lib
│   ├── firmware
│   │   └── mrvl
│   │       └── sd8801_uapsta.bin
│   └── modules
│       └── 3.19.8
│           └── updates
│               ├── mlan.ko
│               └── sd8801.ko
└── opt
    └── lily-w1
        └── bin_sd8801
```

Listing 2: Example target file system

3.5.1 Blacklisting the mwifiex driver

If the target system includes the open source mwifiex driver, make sure to use the correct firmware image by replacing the existing one and that the mwifiex driver is blacklisted to prevent it from being loaded automatically. To blacklist the mwifiex kernel modules, add the following lines to a file under `/etc/modprobe.d/`, for example in `/etc/modprobe.d/blacklist.conf`:

```
blacklist mwifiex
blacklist mwifiex_sdio
```

Listing 3: Blacklisting mwifiex

⚠ Blacklisting will not work for drivers that are built into the kernel image rather than as a kernel module.

3.5.2 Additional software requirements

Some additional packages that are recommended for installation on the target system are mentioned in the following table:

Package	Comment
wpa_supplicant	WPA supplicant. Handles key negotiation and roaming etc. on client side
iw	CLI configuration utility for wireless devices
wireless-tools	CLI tools for configuring wireless device drivers using Wireless Extensions
crda	User space udev helper to load regulatory domain settings

Table 21: Recommended additional software packages

3.6 Loading the drivers

3.6.1 SDIO driver

If the SDIO kernel modules were installed correctly, you can load them by simply issuing the following command:

```
modprobe sd8801 cfg80211_wext=0xf
```

Else, you have to load them separately using the `insmod` command.

This will automatically load the *sd8801* kernel module and all its dependencies such as `mlan` or `cfg80211`. The `cfg80211_wext=0xf` module parameter in the above-mentioned example informs the driver to enable support for the wireless extensions interface and for the `cfg80211` configuration API. A full description of the available module parameters is given in the README files and also in the `modinfo sd8801` command. If the drivers are successfully loaded, you should see them in the list of loaded modules as shown below (via `lsmod` command):

☞ The internal name for the sd8801 module is sd8xxx.

```
Module                  Size  Used by
sd8xxx                  357725  0
mlan                    251382  1 sd8xxx
```

When the module is detected on the SDIO interface, the driver will automatically download the firmware to it, initialize the hardware, and register the network interfaces.

```
wlan: Loading MWLAN driver
wlan: Driver loaded successfully
mmc1: new high speed SDIO card at address 0001
vendor=0x02DF device=0x9139 class=0 function=1
rx_work=0 cpu_num=1
Request firmware: mrvl/sd8801_uapsta_sdio.bin
Wlan: FW download over, firmwarelen=234524 downloaded 234524
WLAN FW is active
fw_cap_info=0xba3, dev_cap_mask=0xffffffff
wlan: version = SD8801-14.85.36.p101-C3X14C160-GPL-(FP85)
```

Listing 4: Kernel log after inserting the SDIO card

Table 22 shows the new network interfaces that are displayed in response to `ifconfig -a`, `iw dev`, or similar commands.

Interface	Function
mlan0	Wi-Fi station mode
uap0	Wi-Fi micro access point mode
wfd0	Wi-Fi Direct

Table 22: Network interfaces

The version of the loaded firmware can be verified for example, by using one of the following commands:

```
$ mlanutl mlan0 version
Version string received: SD8801-14.85.36.p101-C3X14C160-GPL-(FP85)
$ iwpriv mlan0 version
mlan0     version: SD8801-14.85.36.p101-C3X14C160-GPL-(FP85)
```

3.6.2 USB driver

The USB driver can be loaded by issuing the following command, which will load the *usb8801* kernel module and all its dependencies such as `mlan` or `cfg80211`:

```
modprobe usb8801 cfg80211_wext=0xf
```

For a full description of the available module parameters refer to the README files and also to the output of the `modinfo usb8801` command. If the drivers are successfully loaded, you should see them in the list of loaded modules as shown below (via `lsmod` command):

☞ The internal name for the usb8801 module is usb8xxx.

```
Module                  Size  Used by
usb8xxx                 349149  0
mlan                    243114  1 usb8xxx
```

When the module is detected on the USB interface, the driver will automatically download the firmware to it, initialize the hardware, and register the network interfaces.

```
wlan: Loading MWLAN driver
usbcore: registered new interface driver usb8xxx
wlan: Driver loaded successfully
usb 2-1: new high-speed USB device number 4 using musb-hdrc
[…]
Request firmware: mrvl/usb8801_uapsta_usb.bin
WLAN FW is downloaded
usb_reset_device() successful.
usb 2-1: USB disconnect, device number 4
usb 2-1: new high-speed USB device number 5 using musb-hdrc
sb 2-1: New USB device found, idVendor=1286, idProduct=204a
usb 2-1: New USB device strings: Mfr=1, Product=2, SerialNumber=3
usb 2-1: Product: Marvell Wireless Device
usb 2-1: Manufacturer: Marvell
usb 2-1: SerialNumber: D4CA6E9001F7
VID/PID = 1286/204A, Boot2 version = 3117
rx_work=0 cpu_num=1
WLAN FW is active
fw_cap_info=0xba3, dev_cap_mask=0xffffffff
wlan: version = USB8801-14.85.36.p101-C3X14C160-GPL-(FP85)
```

Listing 5: Kernel log after connecting via USB

After successful registration, the network interfaces listed in Table 22 should be available. The version of the loaded firmware can be verified for example, by using one of the following commands:

```
$ mlanutl mlan0 version
Version string received: USB8801-14.85.36.p101-C3X14C160-GPL-(FP85)
$ iwpriv mlan0 version
mlan0     version: USB8801-14.85.36.p101-C3X14C160-GPL-(FP85)
```

3.6.3 Unloading the drivers

To unload the drivers, bring all the interfaces down first and then remove the modules using:

```
rmmod mlan sd8xxx                  # for SDIO driver; or
rmmod mlan usb8xx                  # for USB driver
```

3.7 Reserving MAC addresses

The LILY-W1 module series has two unique MAC addresses reserved for each module, out of which the first address is already stored in the configuration during production. The first address is used for Wi-Fi communication while the second address is available for different interfaces. Refer to the LILY-W1 data sheet for detailed description.

The default MAC address of the module can be changed using `init_cfg.conf` file: This file is provided along with the command options while loading the module.

```
File: /lib/firmware/mrvl/init_cfg.conf

# MAC address (interface: address)
mac_addr=mlan0: 00:50:43:20:12:34
mac_addr=uap0: 00:50:43:20:12:35
mac_addr=wfd0: 02:50:43:20:12:36
```

⚠ This is an example of changing the MAC addresses of the Wi-Fi interfaces. Change the `init_cfg.conf` file as per the requirements and also make sure that each interface is assigned a unique MAC address to avoid conflicts. The driver expects the `init_cfg.conf` file to be present in the `/lib/firmware` directory to access.

```
# modprobe command with init_cfg.conf file:
modprobe usb8801 cfg80211_wext=0xf init_cfg=mrvl/init_cfg.conf

# ifconfig -a | grep HWaddr
mlan0     Link encap:Ethernet  HWaddr 00:50:43:20:12:34
uap0      Link encap:Ethernet  HWaddr 00:50:43:20:12:35
wfd0      Link encap:Ethernet  HWaddr 02:50:43:20:12:36
```

3.8 Prevent high current in deep sleep

Due to internal configuration settings of the used chipset, the LILY-W1 series modules have an unintended high current consumption after firmware download. The current consumption for the deep sleep mode in that case is above 1.4 mA. To prevent the high current consumption, execute the following command after each power cycle of the LILY-W1 series modules:

```
iwpriv mlan0 hscfg 7 2
```

3.9 Configuration of transmit power limits

3.9.1 Purpose

The LILY-W1 series modules contain calibration data for the output power in an on-board non-volatile memory. This calibration data enables the module to achieve maximum transmit power levels that still pass the required EVM and spectral mask limits. The maximum transmit power levels that can be used in an end-product also depend on the following:

- Regulatory domain limits
- Gain of the antenna and antenna trace design

A configuration file on the host system is used to reduce the transmit power levels as needed.

☞ Transmit power limit configuration files for the reference design (Appendix B) and the approved antennas are provided by u-blox for each of the certified regulatory domains.

⚠ The correct transmit power limits must be applied to the module after system startup or change of the regulatory domain.

3.9.2 Transmit power limit configuration file format

A transmit power limit configuration file allows to fine tune the transmit power of the module for a specific

- Band
- Channel
- Modulation rate
- Bandwidth (20 or 40 MHz)

The configuration is provided in a text file (`txpwrlimit_cfg.conf`), which contains specific sections for each channel in the ISM and U-NII bands to specify the transmit power limit for each modulation rate:

```
ChanTRPC.TlvType:2=0x0189
ChanTRPC.TlvLength:2={
    TLVStartFreq:2=2407
    TLVChanWidth:1=20
    TLVChanNum:1=1
    TLVPwr:20='0,16,1,14,2,14,3,14,4,13,5,13,6,13,7,13,8,13,9,13'
}
```

Listing 6: Example transmit power limit configuration for channel 1

The format for the parameters is described in Table 23.

Field name	Type	Description
TLVStartFreq	UINT16	Starting frequency of the band for this channel: 2407, 2414 or 2400 for 2.4 GHz
TLVChanWidth	UINT8	Channel width in MHz (20)
TLVChanNum	UINT8	Logical 5 MHz channel number (1-255)
TLVPwr	UINT8[]	Specifies the transmit power limits for specific modulations as a list of (ModulationGroup, Power) settings, where Power specifies the Tx power limit in dBm ModulationGroup specifies the mapping for the modulation as follows: 0 – CCK (1, 2, 5.5, 11 Mbps) 1 – OFDM (6, 9, 12, 18 Mbps) 2 – OFDM (24, 36 Mbps) 3 – OFDM (48, 54 Mbps) 4 – HT20 (MCS 0, 1, 2) 5 – HT20 (MCS 3, 4) 6 – HT20 (MCS 5, 6, 7) 7 – HT40 (MCS 0, 1, 2) [1] 8 – HT40 (MCS 3, 4) [1] 9 – HT40 (MCS 5, 6, 7) [1] [1] Not supported on LILY-W1

Table 23: Transmit power limit configuration parameters

The example in Listing 6 configures the following transmit power limits for channel 1 in the 2.4 GHz band:

- 16 dBm for 802.11b rates (BPSK, QPSK, CCK)
- 14 dBm for 802.11g OFDM (6-54 Mbps)
- 13 dBm for 802.11n HT20 (MCS 0-7)

3.9.3 Applying the transmit power limit configuration

The configuration file txpwrlimit_cfg.conf contains a section for setting the transmit power limits for the 2.4 band. This can be applied using the mlanutl tool, as shown in the following example:

```
mlanutl mlan0 hostcmd txpwrlimit_cfg.conf txpwrlimit_2g_cfg_set
```

The driver will also look for a binary file (actually a text file with hex values) on the filesystem with the transmit power limit configuration, whenever the regulatory domain is changed. The file name for this should be txpower_XX.bin, where XX is the ISO/IEC 3166 alpha2 country code. The file is expected in the same folder as the firmware. The binary configuration files can be generated from the txpwrlimit_cfg.conf files via the mlanutl tool:

```
mlanutl mlan0 hostcmd txpwrlimit_cfg.conf generate_raw <txpower_XX.bin>
```

3.10 Adaptivity configuration (Energy Detection)

The LILY-W1 series modules support the adaptivity requirements (energy detection) as per the EN 300 328 standard for Wi-Fi. The adaptivity or Energy Detect mechanism must be explicitly enabled after the startup of the module, and correct detection threshold values must be configured. These threshold values depend on the combined gain of the antenna and antenna trace used in the end product.

☞ A configuration file to enable energy detection and configure the detection thresholds is provided by u-blox for the reference designs (Appendix B and the approved antennas [3]).

The following command enables energy detection and configures the detection thresholds according to the settings in the `ed_mac_ctrl.conf` configuration file:

```
mlanutl mlan0 hostcmd ed_mac_ctrl.conf ed_mac_ctrl
```

The content of the ed_mac_ctrl.conf file is provided in the following excerpt:

```
#       File : ed_mac_ctrl.conf
#
#   ./mlanutl mlan0 hostcmd config/ed_mac_ctrl.conf ed_mac_ctrl
#
## Set ED MAC control
ed_mac_ctrl={
        CmdCode=0x0124          # do NOT change this line
        Enable:2=0x1            # 0       - disable, use default
                                # 1       - enable

        Offset:2=0x1b            # 0       - no offset
                                # 0xffff  - offset set to -1
                                # 0x1     - offset set to 1
}
```

☞ The offset value is determined for the u-blox reference design as mentioned in Appendix B. The reference design complies with EN 300 328 standard for the offset of `0x1b`.

Changes to the antenna path of the reference design, such as introducing a higher attenuation on the antenna path, have to be reflected into the energy detection configuration file. Thus, the offset can be increased to compensate the additional attenuation of the antenna path; where increasing the value of the offset would result in a more sensitive behavior. Increasing the offset value by 1 would lower the sensitivity threshold for energy detection by 1 dB. An integrator is encouraged to optimize the sensitivity threshold for energy detection.

3.11 Usage examples

3.11.1 Wi-Fi access point mode

The following example configures and starts an access point using hostapd.

Create a configuration file with the following network related settings:

```
interface=uap0
driver=nl80211
ssid=LILY-W1
channel=6
wpa=2
wpa_passphrase=12345678
wpa_key_mgmt=WPA-PSK
```

Then start hostapd using the command:

```
hostapd /etc/hostapd.conf -B
```

☞ Adding `-ddd` to this command generates debug logs. This command option is useful for debugging any issues related to the bring-up with access point.

To assign an IP address to the access point interface:

```
ifconfig uap0 192.168.1.1
```

The list of client stations that are currently associated with the AP can be obtained with the "`uaputl sta_list`" command. For example:

```
./uaputl sta_list
Number of STA = 1

STA 1 information:
=====================
MAC Address: 60:67:20:xx:xx:xx
Power mfg status: active
Rssi : -56 dBm
```

3.11.2 Wi-Fi station mode

Wpa_supplicant can handle the connection to the access point. For this, create a configuration file with the following network settings:

```
ctrl_interface=/var/run/wpa_supplicant
ap_scan=1
network={
    scan_ssid=1
    ssid="MyAP"
    key_mgmt=WPA-PSK
    psk="12345678"
}
```

Listing 7: wpa_supplicant.conf

Then, run the wpa_supplicant daemon using the configuration file:

```
wpa_supplicant -D nl80211 -i mlan0 -c /etc/wpa_supplicant.conf -B
```

To configure the IP address through DHCP:

```
udhcpc -i mlan0
```

The `iwconfig mlan0` command can be used to display parameters and statistics of the wireless network interface.

3.12 Driver debugging

Driver debugging is provided via the kernel print function `printk` and the `proc` file system. The driver states are recorded and can be retrieved through the proc file system during runtime. The following files containing the debug information are provided (the actual location is dependent on the Linux kernel version):

- `/proc/mwlan/config` or `/proc/net/mwlan/config`
- `/proc/mwlan/mlanX/info` or `/proc/net/mwlan/mlanX/info`
- `/proc/mwlan/mlanX/debug` or `/proc/net/mwlan/mlanX/debug`

☞ mlanX is the name of the device node created at runtime. Other possibilities are uapX and wfdX for the acces point and Wi-Fi Direct interfaces respectively.

Debug messages are also printed to the kernel ring buffer through printk calls. These messages can be accessed raw using the `/proc/kmsg` interface or by the `dmesg` command. Alternatively, this can be handled by more advanced logging facilities.

3.12.1 Compile-time debug options

The extent to which debug messages are available for printing at runtime is controlled by the `CONFIG_DEBUG` variable in the driver's Makefile. The `CONFIG_DEBUG` variable can have the following values:

- n: debug messages are disabled and not compiled into the driver module
- 1: all kinds of debug messages can be configured except for MENTRY, MWARN and MINFO. By default, MMSG, MFATAL and MERROR are enabled.
- 2: all kinds of debug messages can be configured

3.12.2 Runtime debug options

Once debugging is enabled in the Makefile, debug messages can be selectively enabled or disabled at runtime by setting or clearing the corresponding bits of the `drvdbg` parameter:

```
bit 0:  MMSG          PRINTM(MMSG,...)
bit 1:  MFATAL        PRINTM(MFATAL,...)
bit 2:  MERROR        PRINTM(MERROR,...)
bit 3:  MDATA         PRINTM(MDATA,...)
bit 4:  MCMND         PRINTM(MCMND,...)
bit 5:  MEVENT        PRINTM(MEVENT,...)
bit 6:  MINTR         PRINTM(MINTR,...)
bit 7:  MIOCTL        PRINTM(MIOCTL,...)
...
bit 16: MDAT_D        PRINTM(MDAT_D,...), DBG_HEXDUMP(MDAT_D,...)
bit 17: MCMD_D        PRINTM(MCMD_D,...), DBG_HEXDUMP(MCMD_D,...)
bit 18: MEVT_D        PRINTM(MEVT_D,...), DBG_HEXDUMP(MEVT_D,...)
bit 19: MFW_D         PRINTM(MFW_D,...),  DBG_HEXDUMP(MFW_D,...)
bit 20: MIF_D         PRINTM(MIF_D,...),  DBG_HEXDUMP(MIF_D,...)
...
bit 28: MENTRY        PRINTM(MENTRY,...), ENTER(), LEAVE()
bit 29: MWARN         PRINTM(MWARN,...)
bit 30: MINFO         PRINTM(MINFO,...)
```

The value of `drvdbg` can be given as a module parameter when the driver is loaded, by writing to the proc file system's *debug* file or by setting it via the `iwpriv` or `mlanutl` tool.

```
iwpriv mlan0 drvdbg                                          # Get the current driver debug mask
iwpriv mlan0 drvdbg 0                                        # Disable all debug messages
echo "drvdbg=0x7" > /proc/mwlan/mlan0/debug                  # enable MMSG, MFATAL and MERROR
mlanutl mlan0 drvdbg -1                                      # Enable all debug messages
```

Listing 8: Debug examples

4 Handling and soldering

⚠ LILY-W1 series modules are Electrostatic Sensitive Devices that demand the observance of precautions against electrostatic discharge. Failure to observe precautions can result in severe damage to the product. Standard ESD safety practices must be applied.

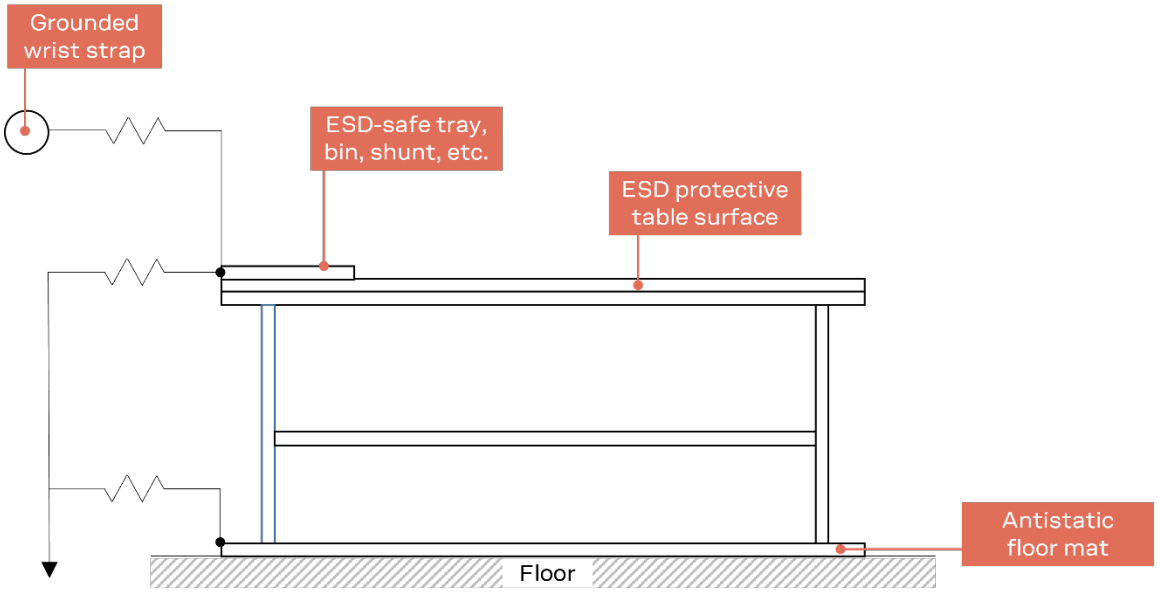

Figure 12: Standard workstation setup for safe handling of ESD-sensitive devices

4.1 Special ESD handling precautions

The risk of introducing electrostatic discharge in the RF transceiver through the RF pins is of special concern and the following bullets must carefully be observed:

- When connecting test equipment or any other electronics to the module (as a standalone or PCB-mounted device), the first point of contact must always be to local GND.
- Before mounting an antenna, connect the device to ground.
- When handling the RF pin, do not touch any charged capacitors. Be especially careful when handling materials like patch antennas (~10 pF), coaxial cables (~50-80 pF/m), soldering irons, or any other materials that can develop charges.
- To prevent electrostatic discharge through the RF input, do not touch any exposed antenna area. If there is any risk of the exposed antenna being touched in an unprotected ESD work area, be sure to implement proper ESD protection measures in the design.
- When soldering RF connectors and patch antennas to the RF pin on the transceiver, be sure to use an ESD-safe soldering iron (tip).

4.2 Packaging, shipping, storage, and moisture preconditioning

For information pertaining to reels, tapes, or trays, moisture sensitivity levels (MSL), storage, shipment, and drying preconditioning, see the LILY-W1 series modules data sheet [1] and Packaging information reference guide [5].

4.3 Reflow soldering process

LILY-W1 series modules are surface mounted devices supplied on a multi-layer FR4-type PCB with gold-plated connection pads. The modules are produced in a lead-free process using lead-free soldering paste. The thickness of solder resist between the host PCB top side and the bottom side of LILY-W1 series modules must be considered for the soldering process.

LILY-W1 series modules are compatible with industrial reflow profile for RoHS solders, and "no-clean" soldering paste is strongly recommended.

LILY-W1 series modules are approved for two-time reflow processes.

The reflow profile used is dependent on the thermal mass of the entire populated PCB, the heat transfer efficiency of the oven, and the type of solder paste that is used. The optimal soldering profile must be trimmed for the specific process and PCB layout.

The target values shown in Table 24 and Figure 13 are given as general guidelines for a Pb-free process only. For further information, see also the JEDEC J-STD-020 [10] standard.

Process parameter		Unit	Target
Pre-heat	Ramp up rate to T_{SMIN}	K/s	3
	T_{SMIN}	°C	150
	T_{SMAX}	°C	200
	t_S (from 25°C)	s	150
	t_S (Pre-heat)	s	110
Peak	T_L	°C	217
	t_L (time above T_L)	s	90
	T_P (absolute max)	°C	260
	t_P (time above T_P-5°C)	s	40
Cooling	Ramp-down from T_L	K/s	6
General	$T_{to\ peak}$	s	300
	Allowed soldering cycles	-	2

Table 24: Recommended reflow profile

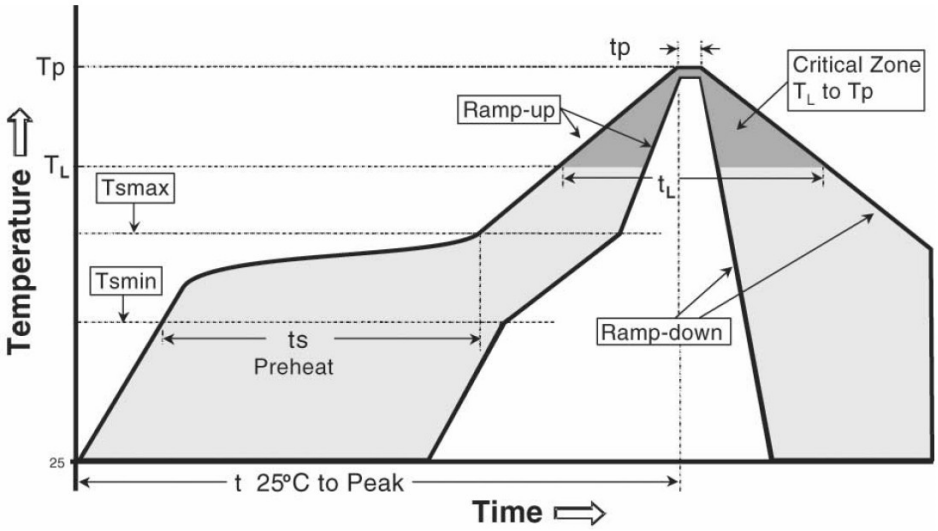

Figure 13: Reflow profile

☞ The lower value of TP and slower ramp down rate is preferred.

4.3.1 Cleaning

Cleaning the modules is not recommended. Residues underneath the modules cannot be easily removed with a washing process.

- Cleaning with water will lead to capillary effects where water is absorbed in the gap between the baseboard and the module. The combination of residues of soldering flux and encapsulated water leads to short circuits or resistor-like interconnections between neighboring pins. Water will also damage the sticker and the ink-jet printed text.
- Cleaning with alcohol or other organic solvents can result in soldering flux residues flooding into the housing, areas that are not accessible for post-wash inspections. The solvent will also damage the sticker and the ink-jet printed text.
- Ultrasonic cleaning will permanently damage the module and the crystal oscillators in particular.

For best results use a "no clean" soldering paste and circumvent the need for a cleaning stage after the soldering process.

4.3.2 Other notes

- Up to two reflow soldering processes are allowed for boards populated with LILY-W1 series modules. See also Reflow soldering process.
- Boards with combined through-hole technology (THT) components and surface-mount technology (SMT) devices may require wave soldering to solder the THT components. Only a single wave soldering process is allowed for boards populated with the modules. Miniature Wave Selective Solder process is preferred over traditional wave soldering process.
- Hand soldering is not recommended.
- Rework is not recommended.
- Conformal coating may affect the performance of the module, which means that it is important to prevent the liquid from flowing into the module. The RF shields do not provide protection for the module from coating liquids with low viscosity; therefore, care is required in applying the coating. Conformal Coating of the module will void the warranty.
- Grounding metal covers: attempts to improve grounding by soldering ground cables, wick or other forms of metal strips directly onto the EMI covers is done at the customer's own risk and will void module's warranty. The numerous ground pins are adequate to provide optimal immunity to interferences.
- The modules contain components which are sensitive to Ultrasonic Waves. Use of any Ultrasonic Processes (cleaning, welding etc.) may damage the module. Use of ultrasonic processes during the integration of the module into an end product will void the warranty.

5 Regulatory compliance

5.1 General requirements

LILY-W1 series modules comply with the regulatory demands of the Federal Communications Commission (FCC), Innovation, Science and Economic Development Canada (ISED)[15], CE mark, National Communications Commission (NCC), and the Japanese Ministry of Information and Communication (MIC).

This chapter contains instructions on the process of integrating LILY-W1 series modules into an end-product.

- Any deviation from the process described may cause the LILY-W1 series module not to comply with the regulatory authorizations of the module and thus void the user's authority to operate the equipment.
- Any changes to hardware, hosts, or co-location configuration can require new radiated emission and SAR evaluation and/or testing.
- The regulatory compliance of LILY-W1 series does not exempt the end-product from evaluation against the applicable regulatory demands; for example, FCC Part 15B criteria for unintentional radiators [12].
- The end-product manufacturer must follow all the engineering and operating guidelines as specified by the grantee (u-blox).
- The LILY-W1 series is for OEM integrators only.
- Only authorized antenna(s) may be used. For the list of authorized antennas, see the LILY-W1 series data sheet [1]. In the end-product, the LILY-W1 series module must be installed in such a way that only authorized antennas can be used.
- The end-product must use the antenna trace reference design described in Appendix B.
- Any notification to the end user about how to install or remove the integrated radio module is NOT allowed.

⚠ If these conditions cannot be met or any of the operating instructions are violated, the u-blox regulatory authorization will be considered invalid. Under these circumstances, the integrator is responsible for re-evaluating the end-product, including the LILY-W1 series module, and obtaining their own regulatory authorization. u-blox may be able to support updates of the u-blox regulatory authorization if required. See also Antenna requirements.

5.2 FCC/ISED End-product regulatory compliance

Given that the integrator follows the instructions described in this document, u-blox warrants that the modular transmitter fulfills the FCC/ISED regulations when operating in the authorized modes on any host product.

⚠ The modular transmitter approval of LILY-W1, or any other radio module, does not exempt the end product from being evaluated against the applicable regulatory demands.

The evaluation of the end product shall be performed with the LILY-W1 module installed and operating in a way that reflects the intended use case of the end-product.

The upper frequency measurement range of the end product evaluation is the 10th harmonic of 2.4 GHz, as declared in 47 CFR Part 15.33 (a)(1) and described in KDB 996369 D04.

[15] Formerly IC (Industry Canada)

The following requirements apply to all products that integrate a radio module:

- Subpart B - UNINTENTIONAL RADIATORS
  To verify that the composite device of host and module comply with the requirements of FCC part 15B, the integrator shall perform sufficient measurements using ANSI 63.4-2014.
- Subpart C - INTENTIONAL RADIATORS
  It is required that the integrator carries out sufficient verification measurements using ANSI 63.10-2013 to validate that the fundamental and out of band emissions of the transmitter part of the composite device complies with the requirements of FCC part 15C.

When the items listed above are fulfilled, the end product manufacturer can use the authorization procedures, as shown in Table 1 of 47 CFR Part 15.101, before marketing the end product. This means the customer has to either market the end product under a Suppliers Declaration of Conformity (SDoC) or certify the product in an accredited test lab.

The description of the FCC regulatory requirements in this document comprise a subset of applicable publications maintained by the FCC Office of Engineering and Technology (OET) Knowledge Database (KDB). We recommend that integrators read the following list of KDB reference documents:

- KDB 178919 D01 Permissive Change Policy
- KDB 447498 D01 General RF Exposure Guidance
- KDB 594280 D01 Configuration Control
- KDB 594280 D02 U-NII Device Security
- KDB 784748 D01 Labelling Part 15 18 Guidelines
- KDB 996369 D01 Module certification Guide
- KDB 996369 D02 Module Q&A
- KDB 996369 D04 Module Integration Guide

5.2.1 Referring to the u-blox FCC/ISED certification ID

If the conditions in General requirements, FCC/ISED End-product regulatory compliance, and all Antenna requirements are met, the u-blox modular FCC/ISED regulatory authorization is valid. Only under the circumstances, may the end-product refer to the u-blox FCC ID and ISED certification number. u-blox may be able to support updates to the u-blox regulatory authorization, by adding new antennas to the u-blox authorization for example.

⚠ To use the u-blox FCC / ISED grant and refer to the u-blox FCC ID / ISED certification ID, the integrator must confirm to u-blox that the software configuration and control requirements as described in Software configuration and control are fulfilled. This is done either by signing the e-LULA (2016.06 or later) or the u-blox Software Configuration Control Declaration. Contact your local support team to obtain these documents.

5.2.2 Obtaining own FCC/ISED certification ID

Integrators who do not want to refer to the u-blox FCC/ISED certification ID, or who do not fulfil all requirements, may obtain their own certification. By progressing their own certification, the integrator has full control of the grant to make any changes.

Integrators who want to base their own certification on the u-blox certification can do so through a process called “Change in ID” (FCC) / “Multiple listing” (ISED). Using this process, the integrator becomes the grantee for a copy of the u-blox FCC/ISED certification. u-blox support these applications with an approval letter that is filed as a Cover Letter exhibit.

☞ For modules with the FCC ID / ISED certification ID printed on the label, the integrator is obliged to replace the module label with a new one that displays the new FCC/ISED ID. For a description of the labeling requirements, see the LILY-W1 series data sheet [1].

⚠ It is the responsibility of the integrator to comply with any upcoming regulatory requirements.

5.2.3 Antenna requirements

In addition to the general requirement to use only authorized antennas, the u-blox grant also requires a separation distance of at least 20 cm from the antenna(s) to all persons. The antenna(s) must not be co-located with any other antenna or transmitter (simultaneous transmission) as well. If this cannot be met, a Permissive Change as described below must be made to the grant.

5.2.3.1 Separation distance

If the required separation distance of 20 cm cannot be fulfilled, a SAR evaluation must be performed. This consists of additional calculations and/or measurements. The result must be added to the grant file as a Class II Permissive Change.

5.2.3.2 Co-location (simultaneous transmission)

If the module is to be co-located with another transmitter, additional measurements for simultaneous transmission are required. The results must be added to the grant file as a Class II Permissive Change.

5.2.3.3 Adding a new antenna for authorization

If the authorized antennas and/or antenna trace design cannot be used, the new antenna and/or antenna trace designs must be added to the grant file. This is done by a Class I Permissive Change or a Class II Permissive Change, depending on the specific antenna and antenna trace design.

- Antennas of the same type and with less or same gain as an already approved antenna can be added under a Class I Permissive Change.
- Antenna trace designs deviating from the u-blox reference design and new antenna types are added under a Class II Permissive Change.

⚠ Integrators that intend to refer to the u-blox FCC ID / ISED certification ID must contact their local support team to discuss the Permissive Change Process. Note also that Class II Permissive Changes are subject to additional NRE costs.

5.2.4 Software configuration and control

As the end-product must comply with the requirements addressed by the OET KDB 594280, the host product integrating the LILY-W1 series must comply with the following requirements:

- The host product uses only authorized firmware images provided by u-blox for operation of the modular transmitter and prevents third parties from making unauthorized changes to all or parts of the modular transmitter authorized driver software.
- The configuration of the modular transmitter must always follow the requirements specified in Operating frequencies and cannot be changed to include unauthorized modes of operation through accessible interfaces of the host product.
- The modular transmitter must when installed into the host product have a regional setting that is compliant with authorized US modes and the host product is protected from being modified by third parties to configure unauthorized modes of operation for the modular transmitter, including the country code.

☞ The OET KDB 594280 D01 lists the topics that must be addressed to ensure that the end-product specific host meets the Configuration Control requirements.

5.2.5 Operating frequencies

LILY-W1 802.11b/g/n operation outside the 2412–2462 MHz band is prohibited in the US and Canada. Configuration of the module to operate on channels 12–13 must be prevented. The channels allowed are described in Table 25.

Channel number	Channel center frequency [MHz] [16]	Allowed channels	Remarks
1 – 11	2412 – 2462	Yes	
12 – 13	2467 – 2472	No	

Table 25: Allowed channel usage under FCC/ISED regulation

5.2.6 End product labeling requirements

For an end-product using the LILY-W1 series, there must be a label containing, at least, the following information:

This device contains
FCC ID: (XYZ)(UPN)
IC: (CN)-(UPN)

(XYZ) represents the FCC "Grantee Code", this code may consist of Arabic numerals, capital letters, or other characters, the format for this code will be specified by the Commission's Office of Engineering and Technology[17]. (CN) is the Company Number registered at IC. (UPN) is the Unique Product Number decided by the grant owner.

The label must be affixed on an exterior surface of the end product such that it will be visible upon inspection in compliance with the modular labeling requirements of OET KDB 784748. The host user manual must also contain clear instructions on how end users can find and/or access the FCC ID of the end product.

In compliance with the modular labeling requirements of OET KDB 784748, the label on the LILY-W1 series module that displays original FCC ID acquired by u-blox can be replaced with a new one that displays the FCC/ISED ID of the end-product.

FCC end product labeling

In accordance with 47 CFR § 15.19, the end product shall bear the following statement in a conspicuous location on the device:

This device complies with Part 15 of the FCC Rules. Operation is subject to the following two conditions:
This device may not cause harmful interference, and
This device must accept any interference received, including interference that may cause undesired operation.

[16] Under IC regulations, operation in the band 5150–5250 MHz is for indoor use only and the end product must be labelled accordingly.
[17] 47 CFR 2.926

ISED end product labeling

The end product shall bear the following statement in both English and French in a conspicuous location on the device:

Operation is subject to the following two conditions: this device may not cause interference, and this device must accept any interference, including interference that may cause undesired operation of the device.
Son utilisation est soumise aux deux conditions suivantes: Cet appareil ne doit pas causer d'interférences et il doit accepter toutes interférences reçues, y compris celles susceptibles d'avoir des effets indésirables sur son fonctionnement.

When the device is so small or for such use that it is not practicable to place the statements above on it, the information shall be placed in a prominent location in the instruction manual or pamphlet supplied to the user or, alternatively, shall be placed on the container in which the device is marketed. However, the FCC/ISED ID label must be displayed on the device as described above.

In case, where the final product will be installed in locations where the end-consumer is unable to see the FCC/ISED ID and/or this statement, the FCC/ISED ID and the statement shall also be included in the end-product manual.

5.2.7 Original FCC and ISED grant

The original grant and the FCC/ISED IDs of the LILY-W1 series module can be found in the LILY-W1 series data sheet [1].

5.3 CE End-product regulatory compliance

5.3.1 Safety standard

In order to fulfill the safety standard EN 60950-1 [11], the LILY-W1 series module must be supplied with a Class-2 Limited Power Source.

5.3.2 CE Equipment classes

This module operates as Class-1 radio equipment. The End-product that utilizes the LILY-W1 series module inherits the equipment class of the module. Class-1 radio equipment can be placed on the market and put into service without restrictions.

☞ Guidance on end product marking, according to the Radio Equipment Directive (RED) can be found at: http://ec.europa.eu/

The table below shows the restrictions while operating the LILY-W1 series in Wi-Fi mode in the European countries:

Channel number	Channel center frequency[MHz]	Indoor use allowed	Outdoor use allowed	Radio Equipment Class	Max. EIRP
1 – 13	2412 – 2472	Yes	Yes	1	100 mW / 20 dBm

Table 26: Channel usage restrictions in the EU

⚠ The EIRP of the LILY-W1 module must not exceed the limits of the regulatory domain that the module operates in. Depending on the host platform's implementation and antenna gain, integrators have to limit the maximum output power of the module through the host software. See the LILY-W1 series data sheet [1] for the approved antennas list of the module and corresponding maximum transmit power levels.

5.4 NCC end-product regulatory compliance[18]

Any host product integrating the LILY-W1 series and placed in the Taiwanese market must comply with the following requirements:

- Without permission granted by the NCC, any company, enterprise, or user is not allowed to change frequency, enhance transmitting power or alter original characteristic as well as performance to an approved low power radio-frequency devices.
- The low power radio-frequency devices shall not influence aircraft security and interfere legal communications; if found, the user shall cease immediately until no interference is achieved. The said legal communications means radio communications is operated in compliance with the Telecommunications Act. The low power radio-frequency devices must be susceptible with the interference from legal communications or ISM radio wave radiated devices.

⚠ The above-mentioned two statements must also appear in Traditional-Chinese version on the end-user manual of a product integrating the LILY-W1 module.

Additionally, the modular transmitter installed into the host product must have a regional setting that is compliant with operation modes authorized in Taiwan and the host product must be protected from being modified by third parties to configure unauthorized modes of operation.

Table 27 shows the channel restrictions while operating the LILY-W1 series in Wi-Fi mode in Taiwan:

Channel number	Channel center frequency [MHz]	Allowed channels	Remarks
1 – 11	2412 – 2462	Yes	
12 – 13	2467 – 2472	No	

Table 27: Allowed channel usage under NCC regulation

☞ Refer to the power tables in Appendix C for maximum configuration settings in the Taiwan regulatory domain. For information about the approved antennas for LILY-W1 series, refer to the LILY-W1 series data sheet [1].

5.4.1 Modular transmitter requirements

The end product is required either to integrate one of the antennas, which is approved with the module for use in Taiwan (see the LILY-W1 series data sheet [1]), or apply for a Class II permissive change.

5.4.2 End product labeling requirements

For an end-product using the LILY-W1 series, there must be a label containing the following information in a clearly visible location:

CCAI16LP1250T6

Marking for LILY-W131

CCAI16LP1280T2

Marking for LILY-W132

This label specifies the original NCC "Grantee Code" that can also be found in the LILY-W1 series data sheet [1]. The host user manual must also contain clear instructions on how end users can find and/or access the end product's NCC ID.

[18] www.ncc.gov.tw

5.5 Japan End-product regulatory compliance

☞ Refer to the LILY-W1 series data sheet [1] for approved antennas and to the power table in Appendix C for maximum power configuration settings in the Japan regulatory domain.

When a product integrated with a LILY-W1 module is placed on the Japanese market, it must have a label affixed on an exterior surface. The label must contain all the information presented in Figure 14. The English translation of the Japanese text displayed below the Giteki mark is - "This equipment contains specified radio equipment that has been certified to the Technical Regulation Conformity Certification under the Radio Law". The marking must be visible for inspection.

R **204-610007**

当該機器には電波法に基づく、技術基準適合証明等を受けた特定無線
設備を装着している。

Figure 14: Giteki mark, R, LILY-W1 MIC certification number.

The recommended size of the Giteki mark is Ø5.0 mm, the minimum size allowed is Ø3.0 mm.

Table 28 shows the channel restrictions while operating the LILY-W1 series in Wi-Fi mode in Japan:

Channel number	Channel center frequency [MHz]	Indoor use allowed	Outdoor use allowed	Modulation type	Max. EIRP
1 – 13	2412 – 2472	Yes	Yes	802.11b	3.00 mW / MHz
1 – 13	2412 – 2472	Yes	Yes	802.11g	1.50 mW / MHz
1 – 13	2412 – 2472	Yes	Yes	802.11n(HT20)	1.50 mW / MHz

Table 28: Channel usage restrictions in Japan

The end product technical documentation shall include a copy of the Japan Radio Certificate.

Based on your location, send an email to the respective support team mail address as mentioned in the Contact section to obtain a copy of the Radio Certificate.

6 Product testing

6.1 u-blox in-series production test

u-blox focuses on high quality for its products. All units produced are fully tested automatically in production line. Stringent quality control process has been implemented in the production line. Defective units are analyzed in detail to improve the production quality.

This is achieved with automatic test equipment (ATE) in production line, which logs all production and measurement data. A detailed test report for each unit can be generated from the system. Figure 15 illustrates typical automatic test equipment (ATE) in a production line.

The following typical tests are among the production tests:

- Digital self-test (firmware download, MAC address programming)
- Measurement of voltages and currents
- Functional tests (SDIO and USB 2.0 interface communication)
- Digital I/O tests
- Measurement and calibration of RF characteristics in all supported bands (such as frequency tuning of reference clock, calibration of transmitter power levels, etc.)
- Verification of RF characteristics after calibration (that is, modulation accuracy, power levels, spectrum etc. are checked to ensure they are all within tolerances when calibration parameters are applied).

Figure 15: Automatic test equipment for module test

6.2 OEM manufacturer production test

As the testing is already done by u-blox, an OEM manufacturer does not need to repeat firmware tests or measurements of the module RF performance or tests over analog and digital interfaces in their production test.

However, an OEM manufacturer should focus on:

- Module assembly on the device; it should be verified that:
    - Soldering and handling process did not damage the module components
    - All module pins are well soldered on device board
    - There are no short circuits between pins

- Component assembly on the device; it should be verified that:
    - Communication with host controller can be established
    - The interfaces between module and device are working
    - Overall RF performance test of the device including antenna

Dedicated tests can be implemented to check the device. For example, the measurement of module current consumption when set in a specified state can detect a short circuit if compared with a "Golden Device" result.

The standard operational module firmware and test software on the host can be used to perform functional tests (communication with the host controller, check interfaces) and to perform basic RF performance tests. In addition, a special manufacturing firmware can be used to perform more advanced RF performance tests. See the following sections for details.

6.2.1 "Go/No go" tests for integrated devices

A "Go/No go" test compares the signal quality with a "Golden Device" in a location with known signal quality. This test can be performed after a connection to an external AP or station has been established. Typical configuration utilities for wireless devices from the OS (like *iw* in Linux) or the NXP tools distributed with the driver package can be used to check the signal quality in term of RSSI. See the README files provided in the NXP driver package for details on the usage of the tools.

Example commands that can be used to get the signal quality are:

- iw dev mlan0 link (for station mode)
- iw dev uap0 station get <peer-MAC-address> (for AP mode)

A very simple test can be performed by just scanning for a known AP on a specific frequency and checking the signal level; for example, "iw dev mlan0 scan freq <freq>".

☞ These kinds of test may be useful as a "go/no go" test but not for RF performance measurements.

This test is suitable to check the functionality of the communication with the host controller and the power supply. It is also a means to verify if components at the antenna interface are well soldered.

A basic RF functional test of the device including the antenna can be performed with standard Wi-Fi and Bluetooth devices as remote stations. The device containing the LILY-W1 series module and the antennas should be arranged in a fixed position inside an RF shield box to prevent interferences from other possible radio devices, in order to get stable test results.

Figure 16 illustrates an exemplary test setup for such a basic RF functional test.

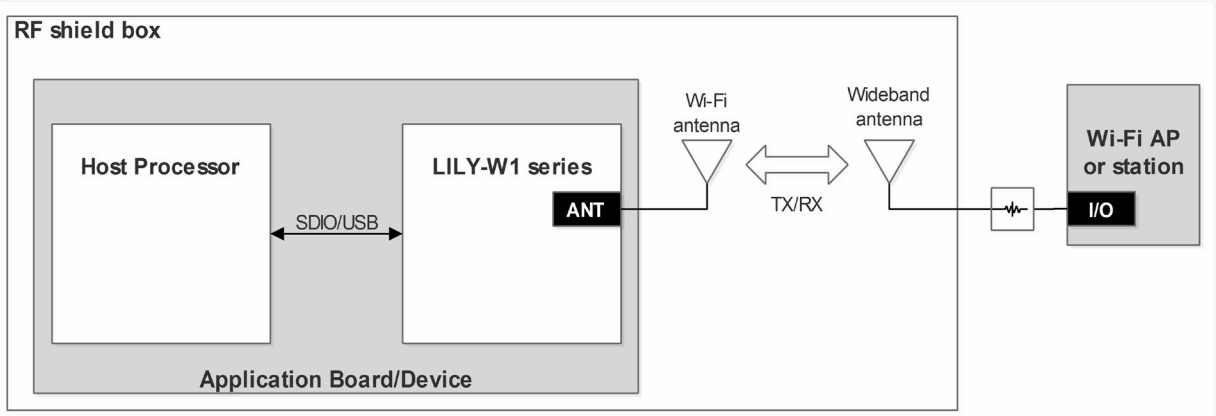

Figure 16: Setup with RF shield box and standard Wi-Fi/Bluetooth devices for radiated tests

6.2.2 RF functional tests

The overall RF functional test of the device including the antenna can be performed with basic instruments such as a spectrum analyzer (or an RF power meter) and a signal generator with the assistance of a special manufacturing firmware on the LILY-W1 series module and the *labtool* utility. The manufacturing firmware and *labtool* utility allow setting the module into Rx or Tx test modes and perform tests to determine the RF performance, for example:

- Transmit in a specified channel and power level in all supported rates and bands to measure output power
- Receive in a specified channel to verify sensitivity
- See the Radio Test Guide [3] for description of the *labtool* utility and detail guide of usage.

This feature allows the measurement of the transmitter and receiver power levels to check component assembly related to the module antenna interface and to check other device interfaces that affect the RF performance.

The module can also be set into TX test modes without using the *labtool* utility. Sample scripts for this can be provided through u-blox support. The test modes for Wi-Fi still require the use of the manufacturing firmware.

- To avoid module damage during transmitter test, a proper antenna according to module specifications or a 50 Ω termination must be connected to ANT port on LILY-W131 module.
- To avoid module damage during receiver test, the maximum power level received at antenna ports must meet the module specifications.

Figure 17 illustrates a typical test setup for such RF functional test.

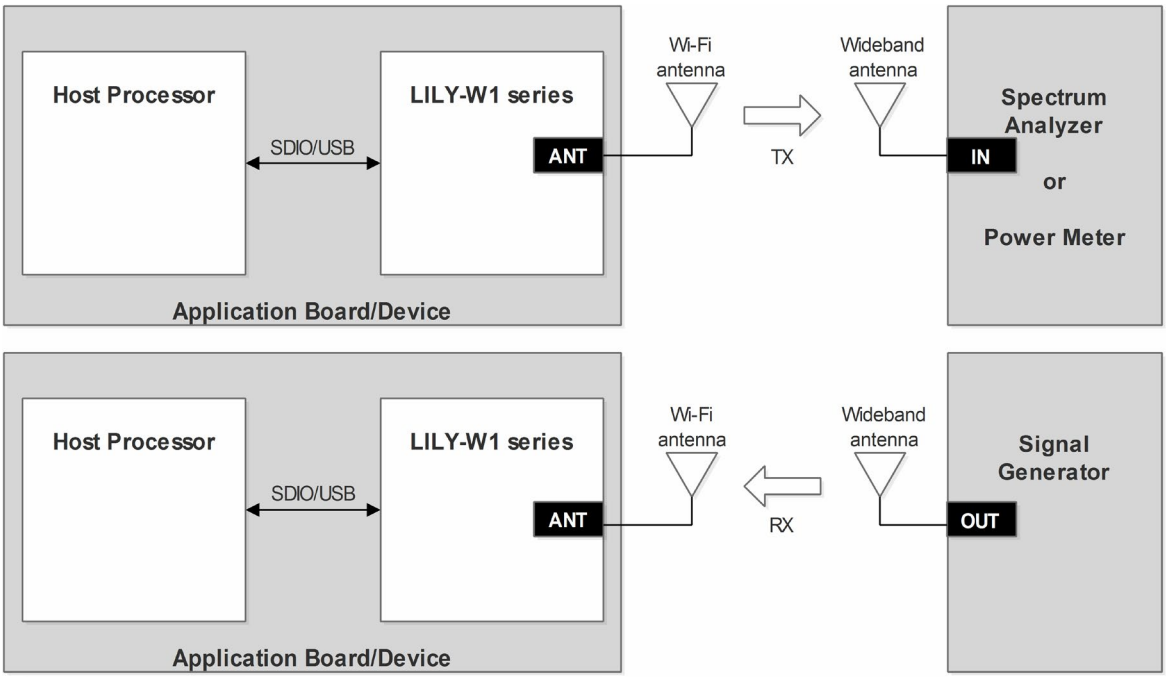

Figure 17: Setup with spectrum analyzer or power meter and signal generator for radiated measurement

Appendix

A Glossary

Abbreviation	Definition
AES	Advanced encryption standard
AP	Access point
API	Application programming interface
CCMP	Counter with CBC-MAC protocol
CMAC	Cipher-based message authentication code
DC	Direct current
DHCP	Dynamic host configuration interface
DTIM	Delivery traffic indication message
DUT	Device under test
EIRP	Effective isotropic radiated power
ESD	Electro static discharge
FCC	Federal Communications Commission
GND	Ground
IC	Industry Canada
IEEE	Institute of Electrical and Electronics Engineers
KDB	Knowledge database
LDO	Low drop out
LPM	Link power management
LTE	Long-Term Evolution
MAC	Medium access control
MMC	MultiMedia card
NSMD	Non solder mask defined
OEM	Original equipment manufacturer
OET	Office of Engineering and Technology
OTP	One-time programmable
OS	Operating system
PCB	Printed circuit board
RF	Radio frequency
RIFS	Reduced inter-frame spacing
SDIO	Secure digital input output
SISO	Single input single output
SMPS	Switching mode power supply
STBC	Space-Time Block Coding
SSID	Service set identifier
STA	Station
TKIP	Temporal key integrity protocol
USB	Universal serial bus
VCC	IC power-supply pin
WAPI	WLAN Authentication and Privacy Infrastructure
WEP	Wired equivalent privacy
WEXT	Wireless extensions

Abbreviation	Definition
WFD	Wi-Fi Direct
WLAN	Wireless local area network
WPA	Wi-Fi Protected Access

Table 29: Explanation of the abbreviations and terms used

B Antenna reference designs

Designers can take full advantage of LILY-W1's Single-Modular Transmitter certification approval by integrating the u-blox reference design into their products. This approach requires compliance with the following rules:

- Only listed antennas can be used, as described in the LILY-W1 series data sheet [1] . See also Adding a new antenna for authorization.
- Schematics and parts used in the design must be identical to u-blox's. RF components may show different behavior at the frequencies of interest due to different construction and parasitics. Use u-blox's validated parts for antenna matching.
- PCB layout must be identical to the one provided by u-blox. Implement one of the reference designs included in this annex or contact u-blox.
- The designer must use the stack-up provided by u-blox. RF traces on the main PCB are part of the certified design.

The available designs are presented in this annexure.

B.1 Reference design for external antennas (U.FL connector)

When using the LILY-W131 together with this antenna reference design, the circuit trace layout must be made in strict compliance with the instructions below. All the components placed on each RF trace must be kept as indicated in the reference design. The reference design uses a micro coaxial connector that is connected to the external antenna via a 50 Ω pigtail.

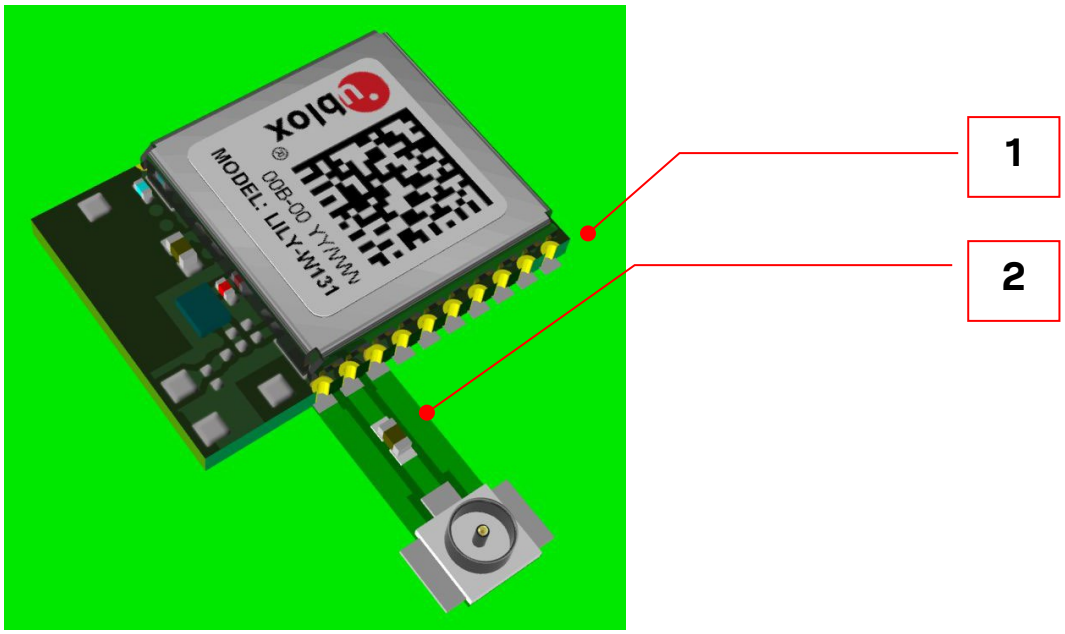

Figure 18: Antenna Reference design embedded in a host carrier PCB

Reference	Description
1	Host carrier PCB (light green)
2	Antenna connector reference design (darker green)

Table 30: LILY-W131 and host carrier PCB

B.1.1 Floor plan and PCB stack-up

This section describes where the critical components are positioned on the reference design. It also presents the stack-up of the four layers of the PCB.

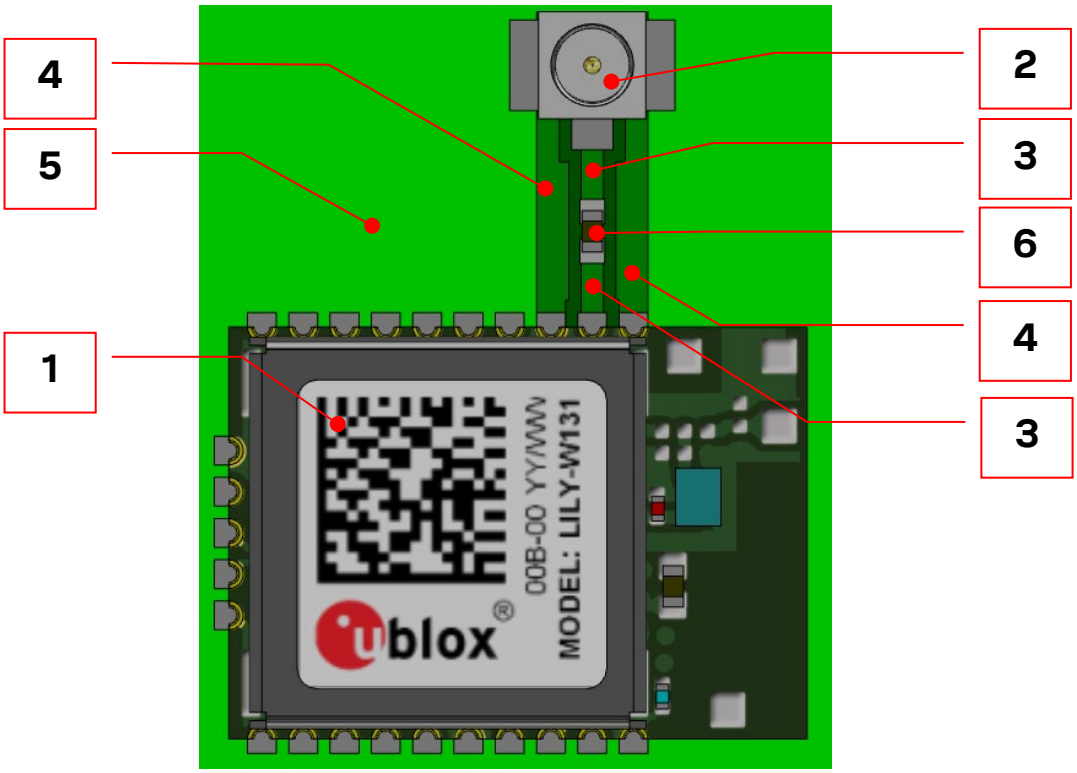

Figure 19: LILY-W131 antenna reference design

Reference	Part	Manufacturer	Description
1	LILY-W131	u-blox	LILY-W131 module
2	U.FL-R-SMT-1(10)	Hirose	Coaxial Connector, 0 – 6 GHz, for external antenna
3			Antenna coplanar microstrip, matched to 50 Ω
4			Top layer GND-plane
5			Host PCB. Should have a solid GND inner layer under and around the RF components (vias and small openings is allowed).
6	10 pF, COG, 0402, 10P +/-0.25P 25 V		Antenna connector capacitor

Table 31: Included part in the antenna connector reference design

B.1.2 PCB stack-up

The stack-up from top to solid GND layer used in the reference design is specified in Table 32.

PCB Layer	Material	Thickness
Soldermask Top	Generic LPI Soldermask	20 µm +/-10 µm
Top	Copper Foil	35 µm +/-15 µm
Dielectric	Pre-preg, εr @2 GHz: 4.05 +/-0.15	300 µm +/-40 µm
GND plane	Copper Foil	15 µm +30 µm

Table 32: Stack-up of EVK-LILY-W131

B.1.3 RF trace specification

The 50 Ω coplanar micro-strip dimensions used in these reference designs are stated in Figure 20 and Table 33.

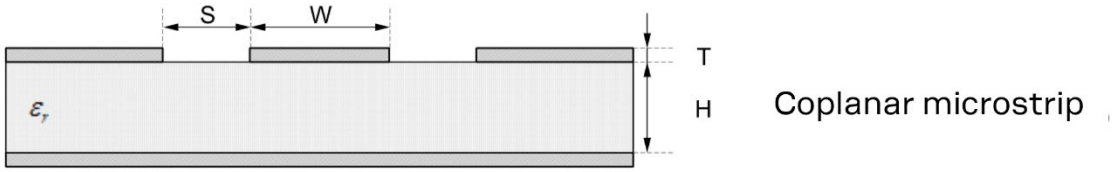

Figure 20: Coplanar microstrip dimension specification

Item	Value
S	300 µm
W	540 µm
T	35 µm
H	300 µm
ε_r	4

Table 33: Coplanar micro-strip specification

B.1.4 Mechanical dimensions

The mechanical dimensions and position of the components are specified in Figure 21.

The solid GND layer beneath the "top layer" shall be minimum 19x15 mm according to Figure 21. No traces are allowed to be routed on the GND layer within this area, but vias and small openings are allowed.

The minimum size of the top layer GND plane is marked in Figure 21 and no other components are allowed within this area.

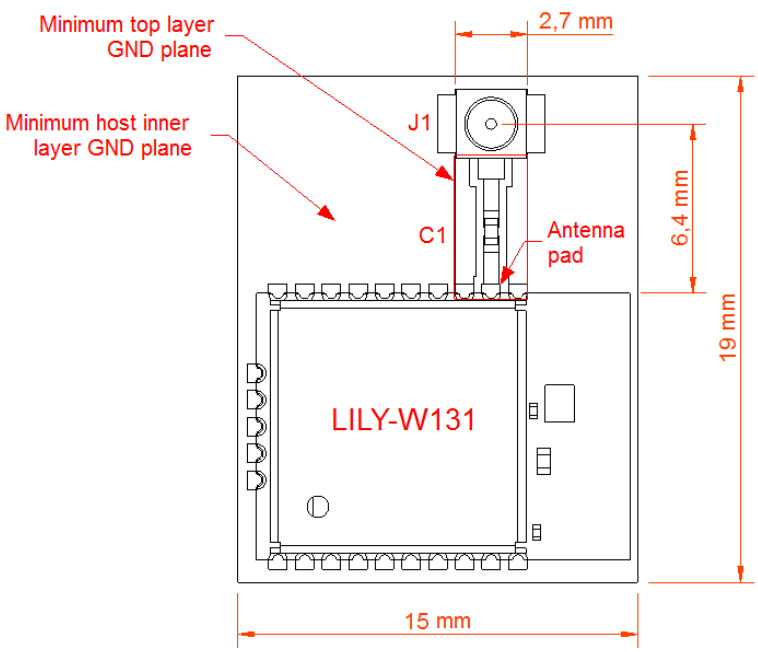

Figure 21: Mechanical dimensions of EVK-LILY-W131

C Wi-Fi Tx output power limits

The maximum allowed conducted output power is limited depending on the regulatory domain / region the module is used. The antenna gain has to be added for EIRP figures.

Approval	Module	Modulation	Channel / Power [dBm]			
			1	2-10	11	12-13
ETSI	All	802.11b	14	14	14	14
		802.11g/n	16	16	16	16
FCC/ISED	All	802.11b	16	16	16	-
		802.11g	14	16	13	-
		802.11n	13	16	11	-
	Japan (MIC)	All	802.11b/g/n	16	16	16 16
Taiwan (NCC)	LILY-W131	802.11b/g/n	16	16	16	-
	LILY-W132	802.11b	14	16	16	-
		802.11g/n	15	16	16	-

Table 34: Maximum allowed conducted transmit power

Related documents

[1] LILY-W1 series data sheet, UBX-15000203
[2] EVK-LILY-W1 user guide, UBX-15012713
[3] Radio test guide application note, UBX-15014433
[4] u-blox Limited Use License Agreement (LULA-M)
[5] u-blox package information guide, UBX-14001652
[6] Universal Serial Bus Specification, Rev. 2.0, Apr 27, 2000
[7] IEC EN 61000-4-2 - Electromagnetic compatibility (EMC) - Part 4-2: Testing and measurement techniques – Electrostatic discharge immunity test
[8] ETSI EN 301 489-1 - Electromagnetic compatibility and Radio spectrum Matters (ERM); ElectroMagnetic Compatibility (EMC) standard for radio equipment and services; Part 1: Common technical requirements
[9] IEC61340-5-1 - Protection of electronic devices from electrostatic phenomena – General requirements
[10] JEDEC J-STD-020 - Moisture/Reflow Sensitivity Classification for Nonhermetic Solid State Surface Mount Devices
[11] ETSI EN 60950-1:2006 - Information technology equipment – Safety – Part 1: General requirements
[12] FCC Regulatory Information, Title 47 – Telecommunication
[13] JESD51 – Overview of methodology for thermal testing of single semiconductor devices
[14] AS/NZS 4268: 2012 – Radio equipment and systems – Short range devices – Limits and methods of measurement.
[15] Integration of LILY-W1 module with I.MX RT Crossover MCUs, Instruction video
[16] Embedded Linux for i.MX Applications Processors, https://www.nxp.com/design/software/embedded-software/i-mx-software/embedded-linux-for-i-mx-applications-processors:IMXLINUX
[17] NXP UM11490, Feature Configuration Guide for NXP-based Wireless Modules on i.MX 8M Quad EVK, https://www.nxp.com/webapp/Download?colCode=UM11490

☞ For product change notifications and regular updates of u-blox documentation, register on our website, www.u-blox.com

Revision history

Revision	Date	Name	Comments
R01	08-Mar-2016	sbia, mzes, kgom	Initial release.
R02	19-Apr-2016	sbia, mzes, kgom	Document status changed to Advance Information. Updated Table 4 with measured values. Section 0 now clarifies the approach for FCC/ISEDC certification. Added reference to the Radio Test Guide Application Note. Other minor updates.
R03	15-Jul-2016	sbia, mzes, mwej	Document status changed to Early Production Information. Updated Table 1. Added section 3.9. Updated section 3 - Software to the latest SDIO and USB reference driver versions. Provided detailed information regarding FCC/IC End-product regulatory compliance (section 5.2). Updated ESD guidelines (section 2.9) with note about PD-n signal. Added info about USB data signal disturbance (section 1.5.2 and 2.4.2). Updated Appendix B. Updated Thermal guidelines (section 2.8).
R04	11-Oct-2016	mzes, sbia, kgom	Added Wi-Fi Tx output power limits in Appendix C. Included regulatory compliance for Japan (section 5.5).
R05	11-Jan-2017	sbia, shoe, kgom	Included regulatory compliance for Taiwan (section 5.4 and Appendix C). Added information about how to prevent high current consumption in sleep mode (section 3.7). Replaced Document status with Disclosure restriction on page 2.
R06	10-Apr-2018	sbia, shoe, lalb	Changed the product status to Mass Production. Improved the information about inner pads (Figure 2 and Table 3). Added information about tested kernel versions of the reference drivers (section 3.2). Updated section 5 with respect to RED certification. Updated section 3.11.1 with behavior of reference tools for different driver versions.
R07	4-Dec-2018	shoe, kgom	Updated Table 1. Added information about adaptivity configuration (section 3.10).
R08	21-Oct-2019	aheg	Updated Table 1. Included information about how to reserve MAC addresses (section 3.7). Updated usage examples (section 3.11).
R09	29-Jun-2020	lber, mzes, mhan	Updated section 5.2 FCC/ISED end-product regulatory compliance and changed Marvell references to NXP.
R10	16-Dec-2020	lber, mwej, fcru, frca	Added LILY-W131-10B and LILY-W132-10B module variants in the product table and referenced these as module variants that allow two solder reflows in section 4.3.2.
R11	28-Sep-2021	lber	Added LILY-W133 variant to document scope, with several related revisions included throughout the document.
R12	06-May-2022	mzes	Reflow soldering process updated to allow two reflow soldering cycles for all LILY-W1 variants. Updated Figure 1: LILY-W1 block diagram. Added open-source and MCUXpresso in Available software packages.
R13	28-Mar-2024	lber	Included recommendation for two-time reflow in Table 24: Recommended reflow profile.

Contact

u-blox AG

Address: Zürcherstrasse 68
8800 Thalwil
Switzerland

For further support and contact information, visit us at www.u-blox.com/support.