SPECIFICATION FOR APPROVAL

CUSTOMER ：

CUSTOMER'S P/N ：

PART NUMBER ： WAN098070DD252SHL7

DESCRIPTION ： Chip Antenna 8070 M Ant 2.45G +5G Type HL7

VERSION ： V1.1

ISSUE DATE ： 2024/06/13

CUSTOMER APPROVED

R&D CENTER		
APPROVAL	CHECKED	DRAWN
Ray	Snow	Jerry

OneWave 萬誠科技股份有限公司

OneWave Electronic Co., Ltd.

1F, No. 151, Li Gong Street, Beitou District,
Taipei City 112, Taiwan
TEL: +886 2 2898-2220
FAX: +886 2 2898-5055

8070 Side-standing Antenna

For WLAN Dual-Band Applications

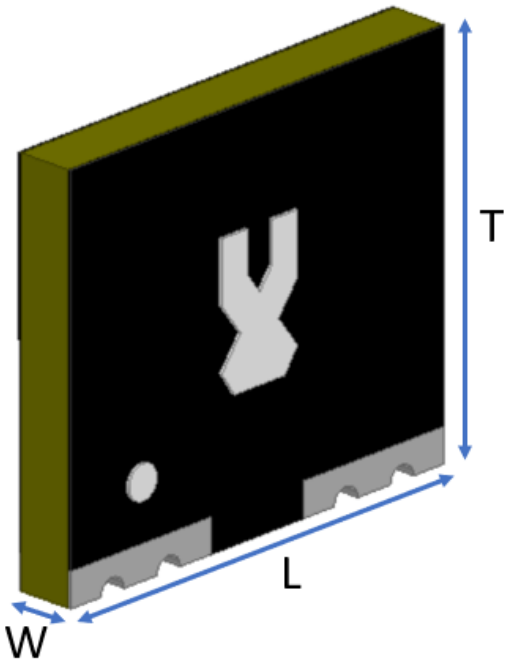

OneWave 限公司

P/N: WAN098070DD252SHL7

	Dimension (mm)
L	8.00 ± 0.20
W	1.65 ± 0.20
T	7.00 ± 0.20

Part Number Information

WAN	09	8070	D	D25	2S	H	L7
A	G	B	C	D	H	E	F

A	Product Series	Antenna
B	Dimension L x W	8.00X1.65mm (± 0.2mm)
C	Material	High K material
D	Working Frequency	2.4 ~ 2.5GHz + 5.15~5.85GHz
E	Feeding mode	Monopole & Single Feeding
F	Antenna type	Type = L7
G、H	Internal Code	

1. Electrical Specification

Specification		
Part Number	WAN098070DD252SHL7	
Central Frequency	2450 / 5550	MHz
Bandwidth	120 / 700 (Min.)	MHz
Return Loss	-6.5 (Max)	dB
Peak Gain	1.98/3.60	dBi
Impedance	50	Ohm
Operating Temperature	-40～+110	℃
Maximum Power	4	W
Resistance to Soldering Heats	10 (@ 260℃)	sec.
Polarization	Linear	
Azimuth Beamwidth	Omni-directional	
Termination	Cu / Sn (Leadless)	

Remark : Bandwidth & Peak Gain was measured under evaluation board of next page

OneWave 博誠科技股份有限公司

2. Recommended PCB Pattern

a. Evaluation Board Dimension (board size 80x80mm)

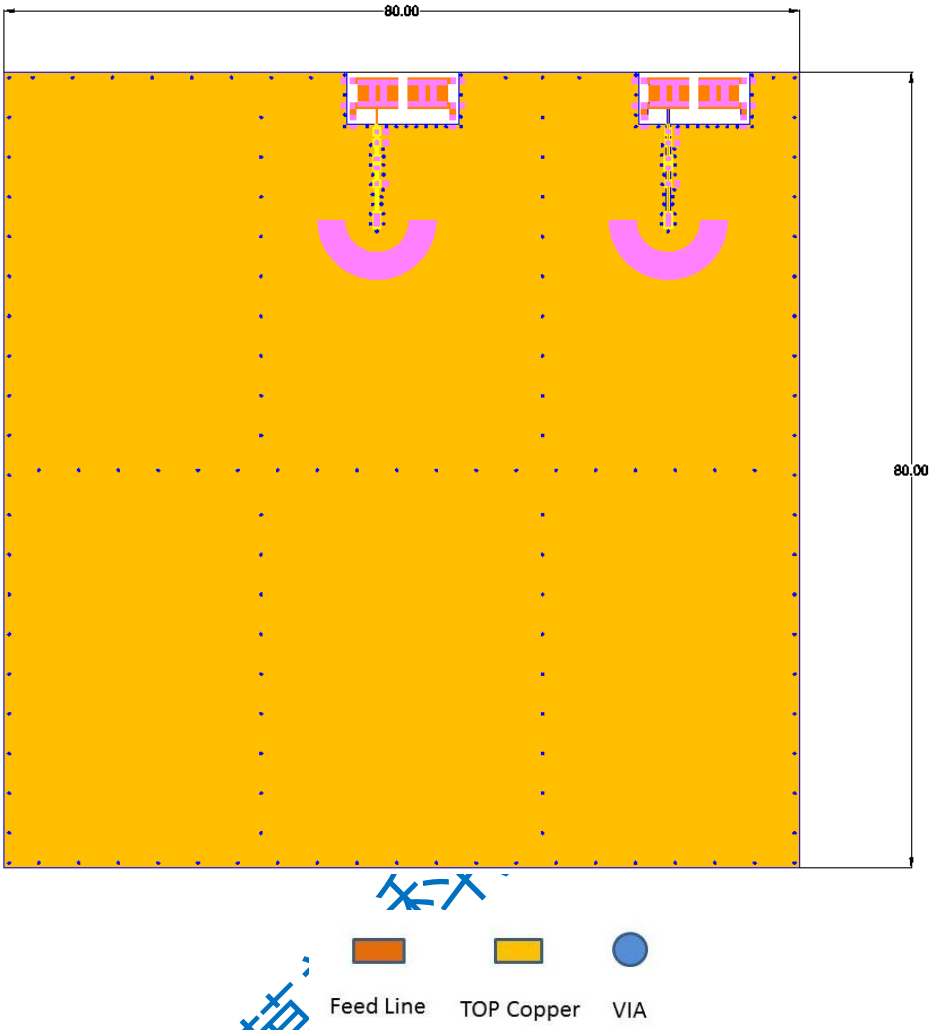

Suggested Matching Circuit

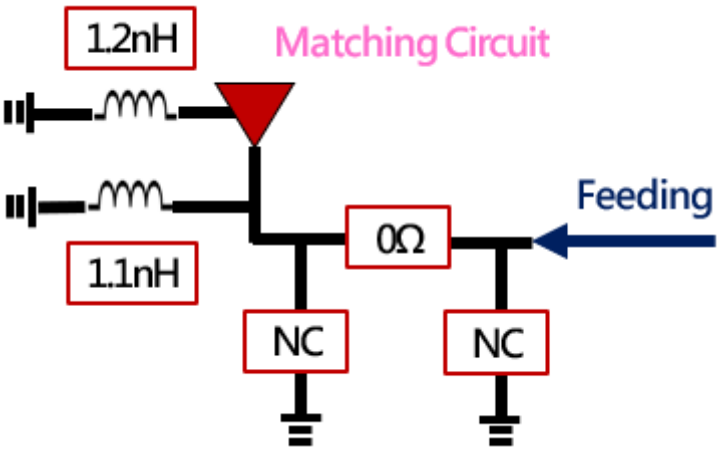

OneWave 博

a. Layout Dimensions in Clearance area(Size=11.2*5.20mm)

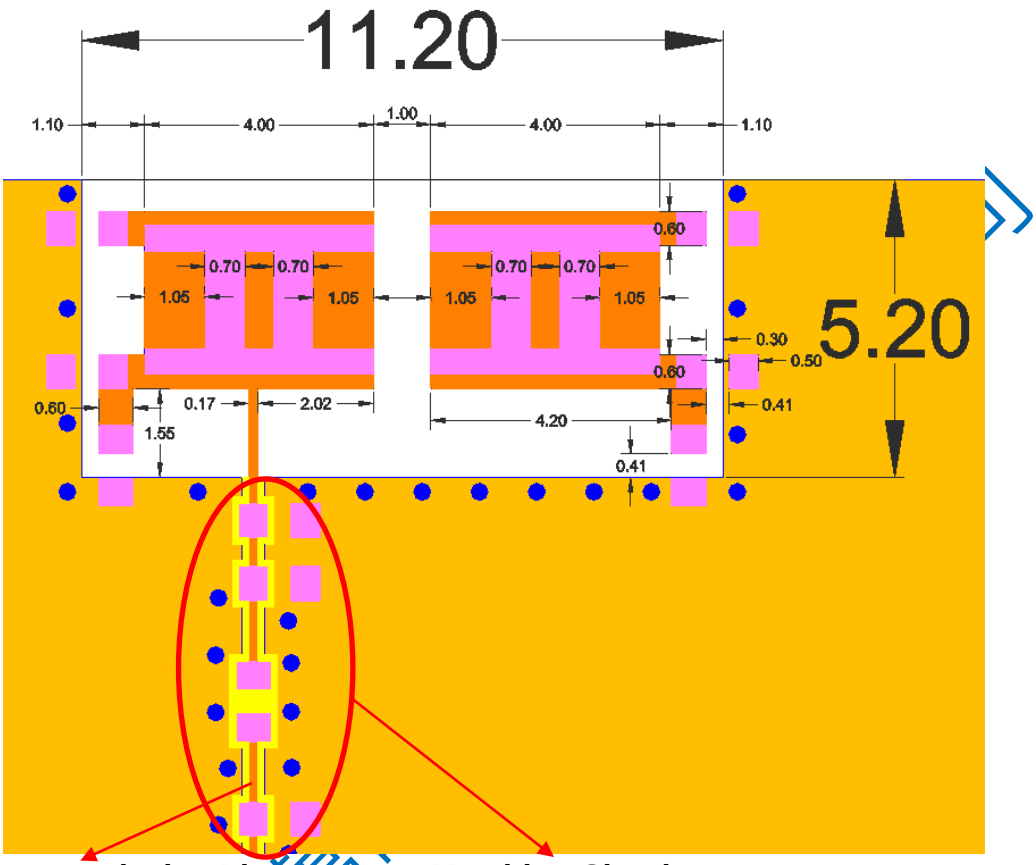

50Ω transmission Line Matching Circuit

FootPrint (Unit : mm)

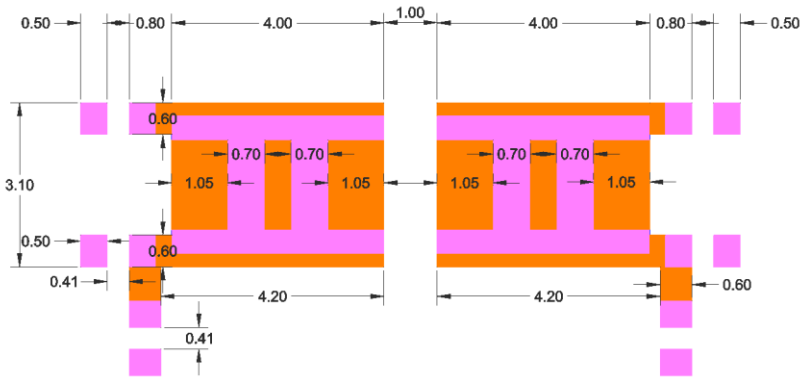

OneWave

Antenna SMT Angle Tolerance

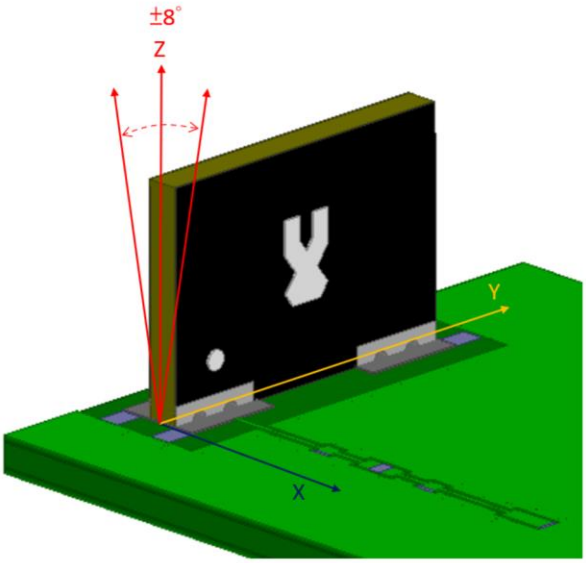

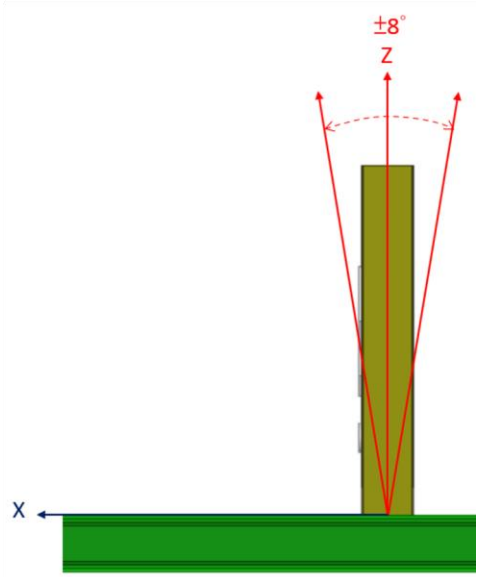

OneWave 萬誠科技股份

3. Measurement Results

Return Loss

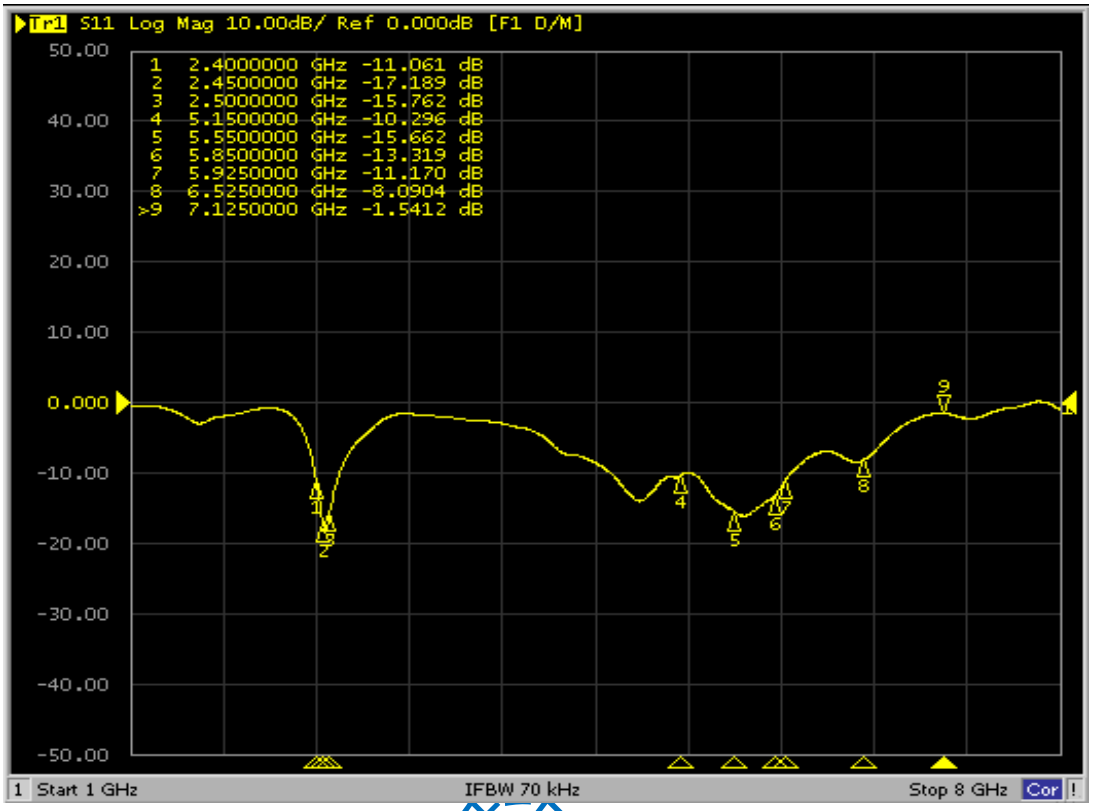

OneWave 萬誠科

Ant. Gain Pattern @2.45GHz

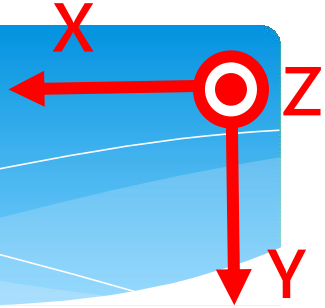

- Passive Test (Free Space)

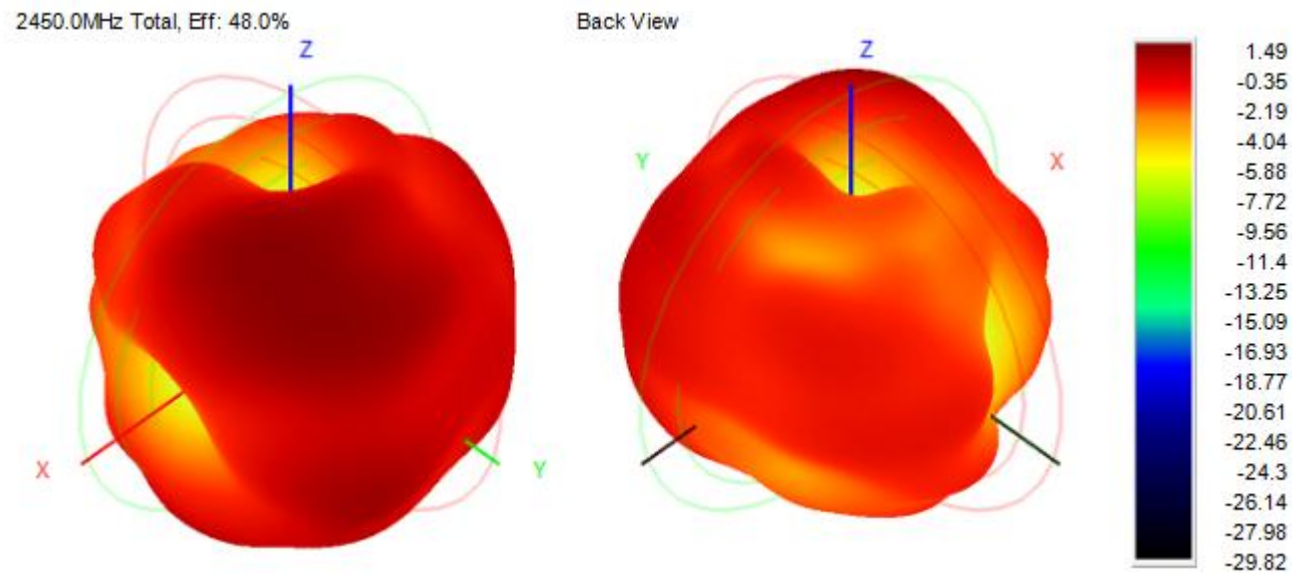

序号	1	2	3	4	5	6	7	8	9	10	11
频率(MHz)	2400.0	2410.0	2420.0	2430.0	2440.0	2450.0	2460.0	2470.0	2480.0	2490.0	2500.0
效率 (dBi)	-3.61	-3.20	-3.12	-3.06	-2.88	-3.18	-2.99	-2.89	-2.81	-2.95	-3.07
增益 (dBi)	1.26	1.62	1.70	1.71	1.91	1.49	1.70	1.85	1.98	1.95	1.88
效率 (%)	43.51	47.89	48.75	49.42	51.56	48.03	50.28	51.37	52.35	50.69	49.32

Ant. Gain Pattern @5.2GHz

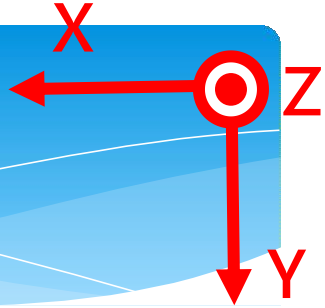

- Passive Test (Free Space)

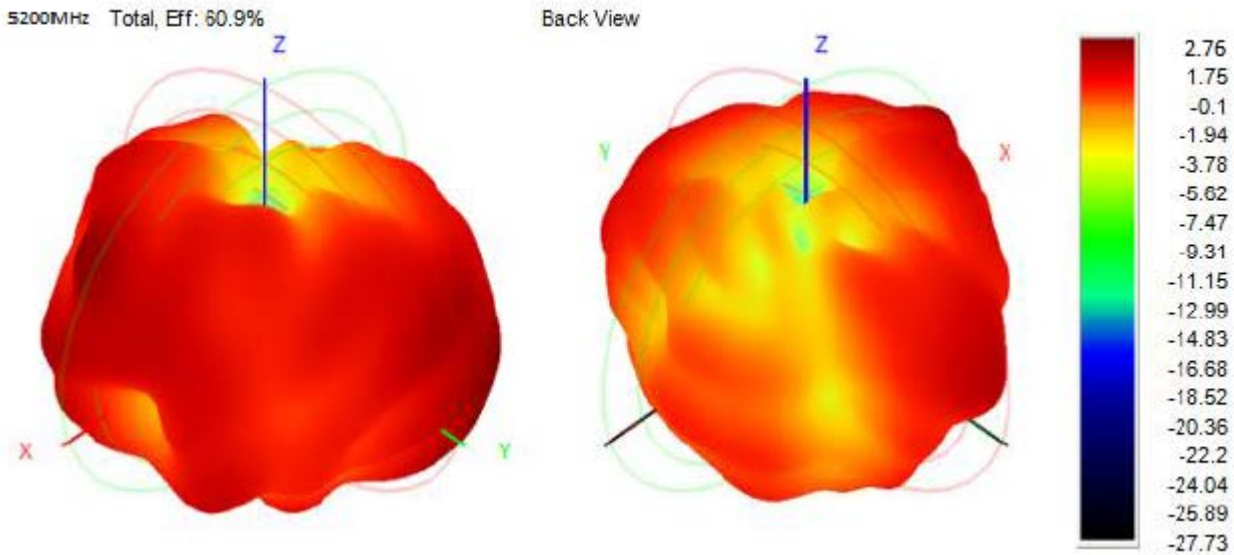

序号	1	2	3	4	5	6	7	8	9	10	11	12	13	14	15
频率(MHz)	5150.0	5200.0	5250.0	5300.0	5350.0	5400.0	5450.0	5500.0	5550.0	5600.0	5650.0	5700.0	5750.0	5800.0	5850.0
效率 (dBi)	-2.86	-2.48	-2.62	-2.49	-2.15	-2.36	-2.16	-2.28	-2.15	-2.41	-2.29	-2.60	-2.33	-2.51	-2.43
增益 (dBi)	1.87	2.76	2.22	2.99	3.43	3.22	3.60	3.60	3.59	3.46	3.19	2.94	3.33	3.00	3.33
效率 (%)	51.75	56.46	54.72	56.31	60.95	58.01	60.85	59.19	60.90	57.47	59.00	54.91	58.51	56.08	57.21

Onewave 萬誠科技股份有限公司

Chamber Coordinate System

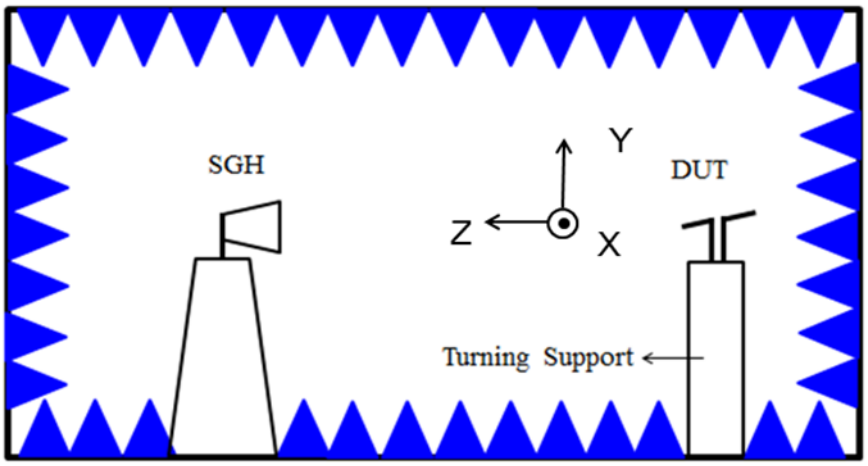

4. Reliability and Test Condictions

ITEM	REQUIREMENTS	TEST CONDITION
Solderability	1. Wetting shall exceed 90% coverage 2. No visible mechanical damage 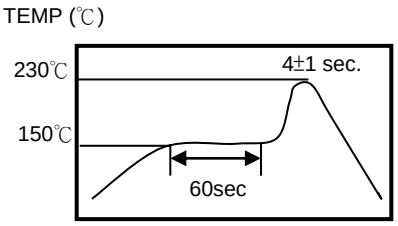	Pre-heating temperature:150℃/60sec. Solder temperature:230±5℃ Duration:4±1sec. Solder:Sn-Ag3.0-Cu0.5 Flux for lead free: rosin
Solder heat Resistance	1. No visible mechanical damage 2. Central Freq. change :within ± 6% 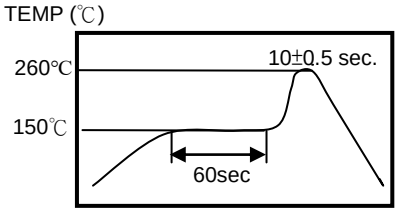	Pre-heating temperature:150℃/60sec. Solder temperature:260±5℃ Duration:10±0.5sec. Solder:Sn-Ag3.0-Cu0.5 Flux for lead free: rosin
Component Adhesion (Push test)	1. No visible mechanical damage	The device should be reflow soldered(230±5℃ for 10sec.) to a tinned copper substrate A dynometer force gauge should be applied the side of the component. The device must with-ST-F 0.5 Kg without failure of the termination attached to component.
Component Adhesion (Pull test)	1. No visible mechanical damage	Insert 10cm wire into the remaining open eye bend ,the ends of even wire lengths upward and wind together. Terminal shall not be remarkably damaged.
Thermal shock	1. No visible mechanical damage 2. Central Freq. change :within ±6% Phase / Temperature(℃) / Time(min) 1 / +110±5℃ / 30±3 2 / Room Temperature / Within 3sec 3 / -40±2℃ / 30±3 4 / Room Temperature / Within 3sec	+110℃=>30±3min -40℃=>30±3min Test cycle:10 cycles The chip shall be stabilized at normal condition for 2~3 hours before measuring.
Resistance to High Temperature	1. No visible mechanical damage 2. Central Freq. change :within ±6% 3. No disconnection or short circuit.	Temperature: +110±5℃ Duration: 1000±12hrs The chip shall be stabilized at normal condition for 2~3 hours before measuring.
Resistance to Low Temperature	1. No visible mechanical damage 2. Central Freq. change :within ±6% 3. No disconnection or short circuit.	Temperature:-40±5℃ Duration: 1000±12hrs The chip shall be stabilized at normal condition for 2~3 hours before measuring.
Humidity	1. No visible mechanical damage 2. Central Freq. change :within ±6% 3. No disconnection or short circuit.	Temperature: 40±2℃ Humidity: 90% to 95% RH Duration: 1000±12hrs The chip shall be stabilized at normal condition for 2~3 hours before measuring.

技股份有限公司

5. Soldering and Mounting

Mildly activated rosin fluxes are preferred. The minimum amount of solder can lead to damage from the stresses caused by the difference in coefficients of expansion between solder, chip and substrate. The terminations are suitable for all wave and re-flow soldering systems. If hand soldering cannot be avoided, the preferred technique is the utilization of hot air soldering tools.

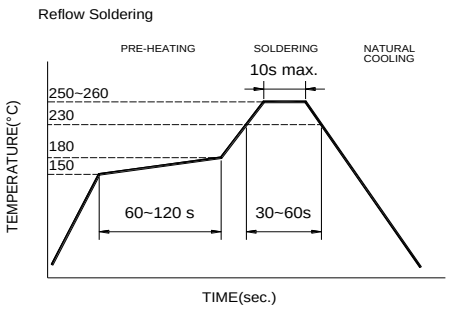

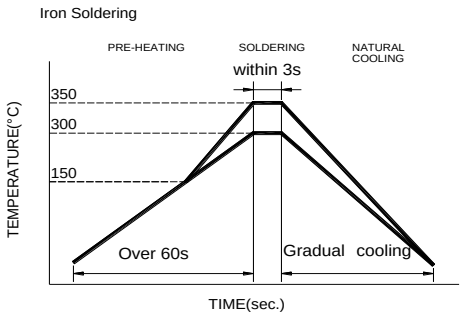

Recommended temperature profiles for re-flow soldering in Figure 1.

Products attachment with a soldering iron is discouraged due to the inherent process control limitations. In the event that a soldering iron must be employed the following precautions are recommended.

- Preheat circuit and products to 150℃
- Never contact the ceramic with the iron tip
- Use a 20 watt soldering iron with tip diameter of 1.0mm
- 280℃ tip temperature (max)
- 1.0mm tip diameter (max)
- Limit soldering time to 3 sec.

OneWave 禾伸科技股份

6. Packaging Information

◆ **Tape Specification**

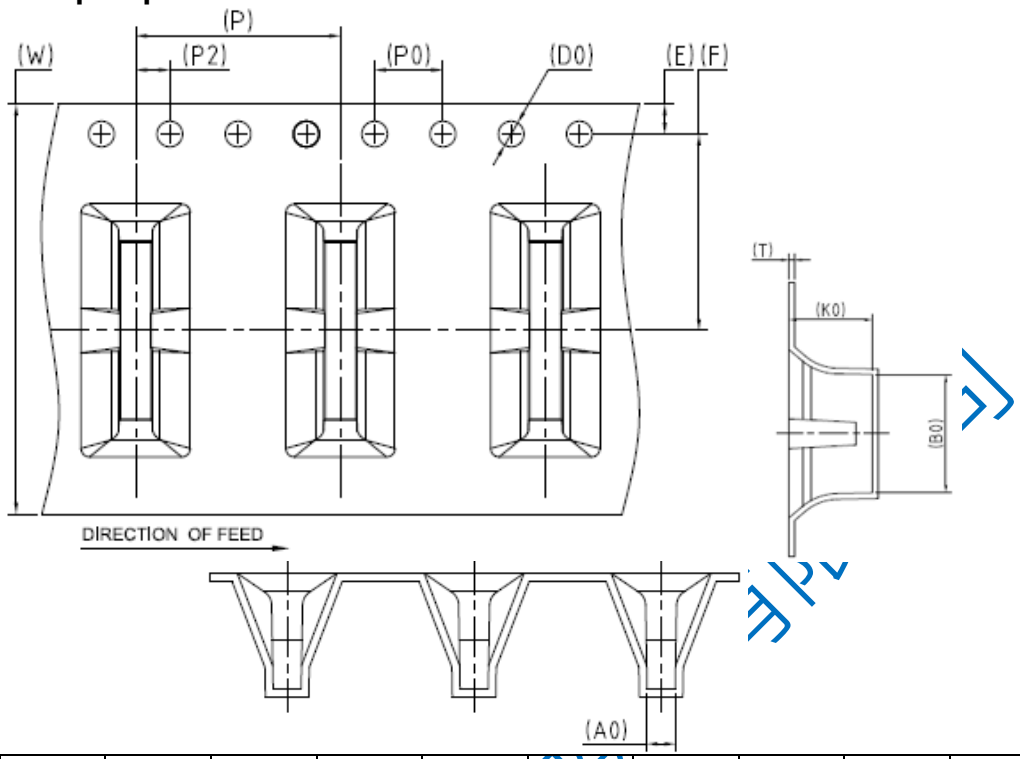

W	Ao	Bo	Ko	F	E	Do	Po	P	P2	t
24.0 ±0.30	1.80 ±0.10	8.40 ±0.10	7.40 ±0.10	11.50 ±0.10	1.75 ±0.10	1.50 ±0.10	4.00 ±0.10	12.00 ±0.10	2.00 ±0.10	0.50 ±0.05

◆ **Reel Specification: (" 13", Φ330 mm)**

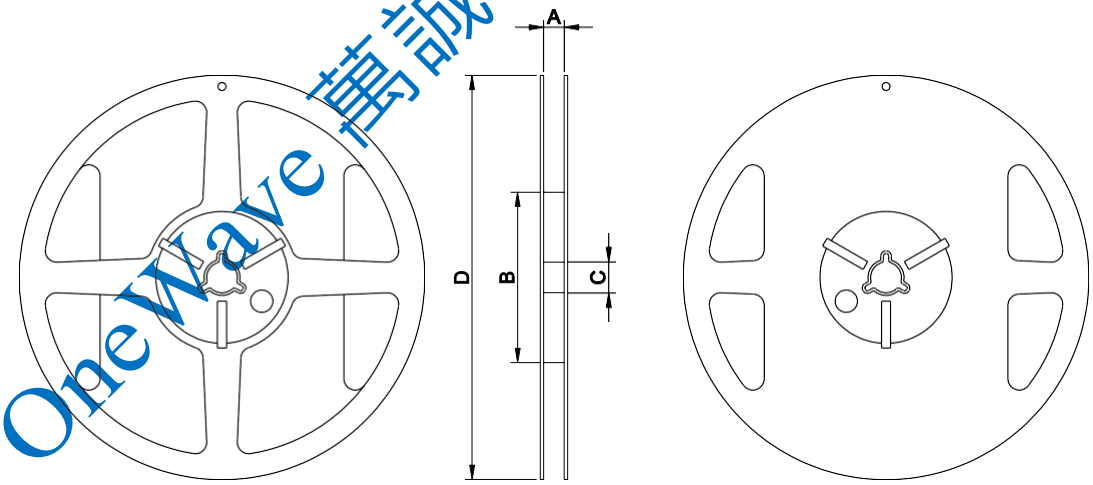

13" x 24 mm

Tape Width(mm)	A(mm)	B(mm)	C(mm)	D(mm)	Chip/Reel(pcs)
24	24.0±0.5	99.5±1.0	13.5±0.5	330±1.0	700

OneWave 博诚科技股

7. Storage and Transportation Information

Storage Conditions

To maintain the solderability of terminal electrodes:

1. Temperature and humidity conditions: -10~ 40℃ and 30~70% RH.

2. Recommended products should be used within 6 months from the time of delivery.

3. The packaging material should be kept where no chlorine or sulfur exists in the air.

Transportation Conditions

1. Products should be handled with care to avoid damage or contamination from perspiration and skin oils.

2. The use of tweezers or vacuum pick up is strongly recommended for individual components.

3. Bulk handling should ensure that abrasion and mechanical shock are minimized.

OneWave 萬誠科技股份有限公司