# 2.4GHz WIRELESS
# DIGITAL HEADSET

# User Manual

## INTRODUCTION

This 2.4GHz DIGITAL WIRELESS CHIN HEADSET uses latest digital wireless technology, and enables to improve the hearing aid capability that may required by the elderly people to enjoy crystal sound stereo music and TV sound anywhere inside your home. Simply connect the transmitter to a desired audio source: DVD player, CD player, TV set, Hi-Fi system, or iPod. Without complicated wiring and installation, the system enables you to enjoy thrilling, lifelike sound in minutes.

## FEATURES

1. 2.4GHz Digital Hopping System Technology
2. Docking Charge Mechanism
3. RF Transmission Auto Off (when without audio signal)
4. Music Muting for Verbal Communications
5. Speed Charging Mechanism
6. Spare Battery Charging Design
7. Microphone Adapter for sound pick up from audio source.
8. Adjustment of Sound Balance
9. Adjustment of Treble/Tone Clarity

## COMPONENT PART LIST

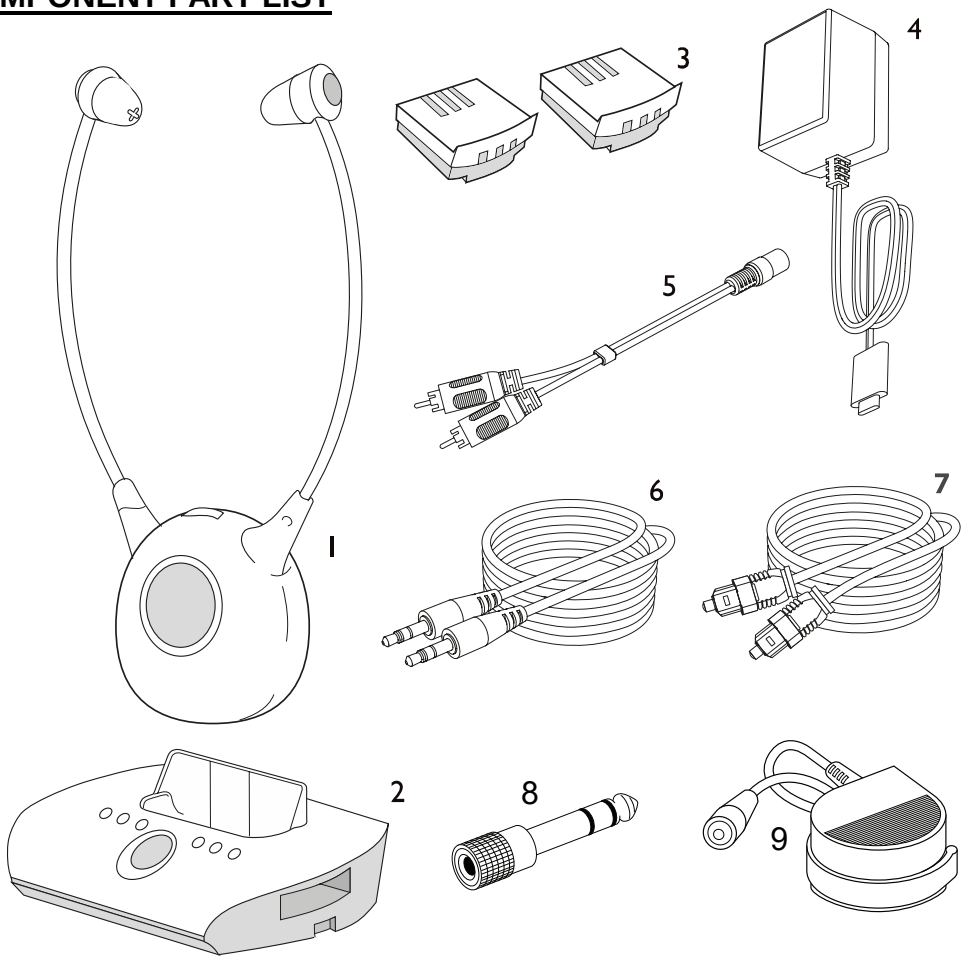


1. Headset Receiver x 1
2. Transmitter x 1
3. Polymer Lithium Rechargeable Battery x 2
4. AC/DC Adapter x 1
5. RCA Adapter Cable x 1
6. Audio Cable (both ends with 3.5 mm stereo plug) x 1
7. Toslink cable
8. 6.3mm (1/4”) to 3.5mm Adapter Plug
9. External Microphone

# Function Identification: Headset Receiver

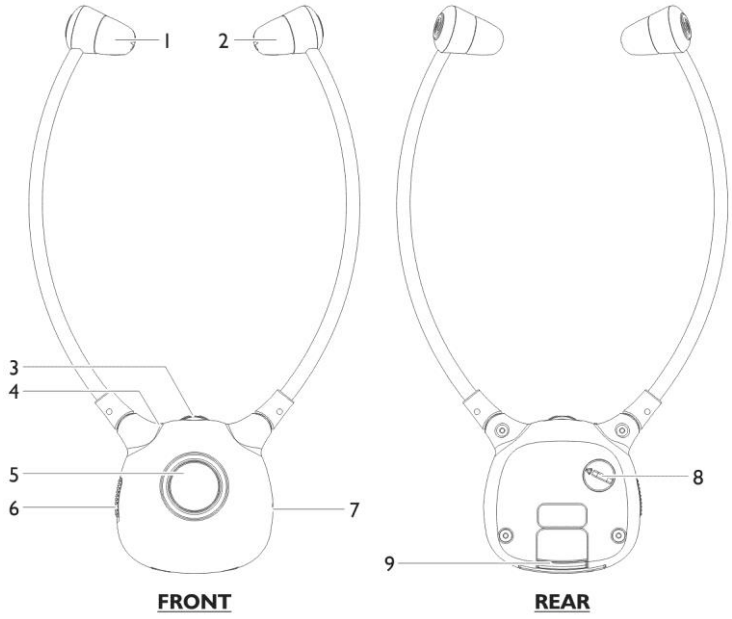


1. Right Adjustable Earbud
2. Left Adjustable Earbud
3. Volume Control
4. LED Indicator of Power/Signal
5. Mute Button for Verbal Communications
6. Power On/Off Switch
7. Microphone
8. Sound Balance Control (Left/Middle/Right)
9. Battery

## Function Identification: Transmitter

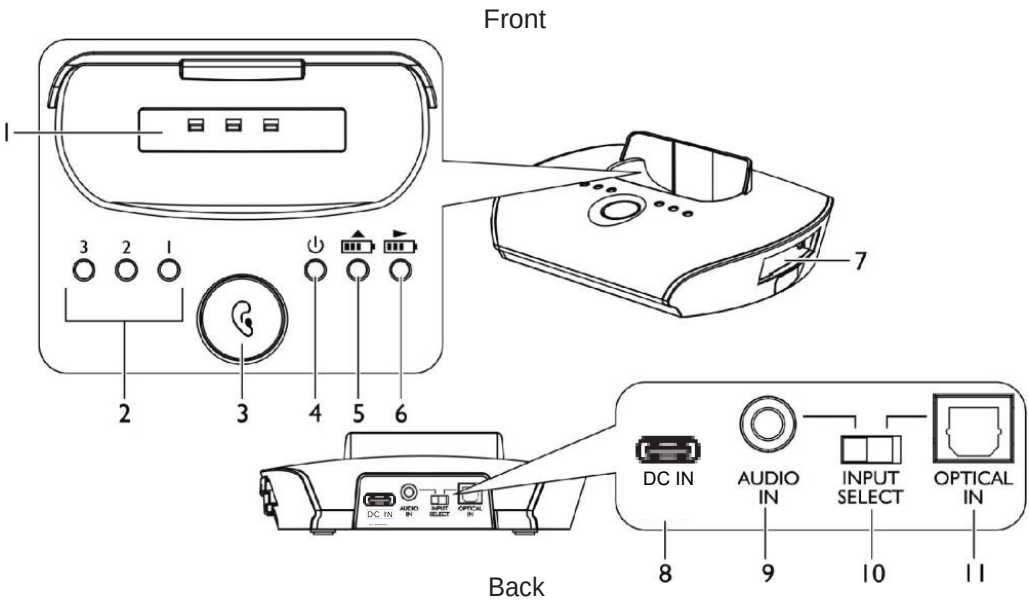


1. Charging Cradle
2. LED Indicator of Tone Clarity
3. Tone adjustment button
4. LED Indicator of Power/Signal
5. LED Charging Indicator for Main Battery (attached to Headset Receiver)
6. LED Charging Indicator for Spare Battery
7. Spare Charging Slot
8. DC In
9. 3.5mm Audio In Socket
10. Audio / Optical input selector switch
11. optical input digital

# INSTALLATION

## TRANSMITTER

1. Connect the Power Adapter to the DC IN input Socket located on the transmitter rear panel.
2. Connect the Power Adapter provided to an Electrical Outlet.
3. RCA Adapter Cable, Audio Cable, 6.3 mm to 3.5 mm Adapter Plug, External Microphone, Toslink cable and are provided for various type of connection to your Audio Source (e.g. TV set, Hi-Fi system, MP3 or iPod).
4. Behind the Transmittter, select the Power ON/OFF Switch to ON position.

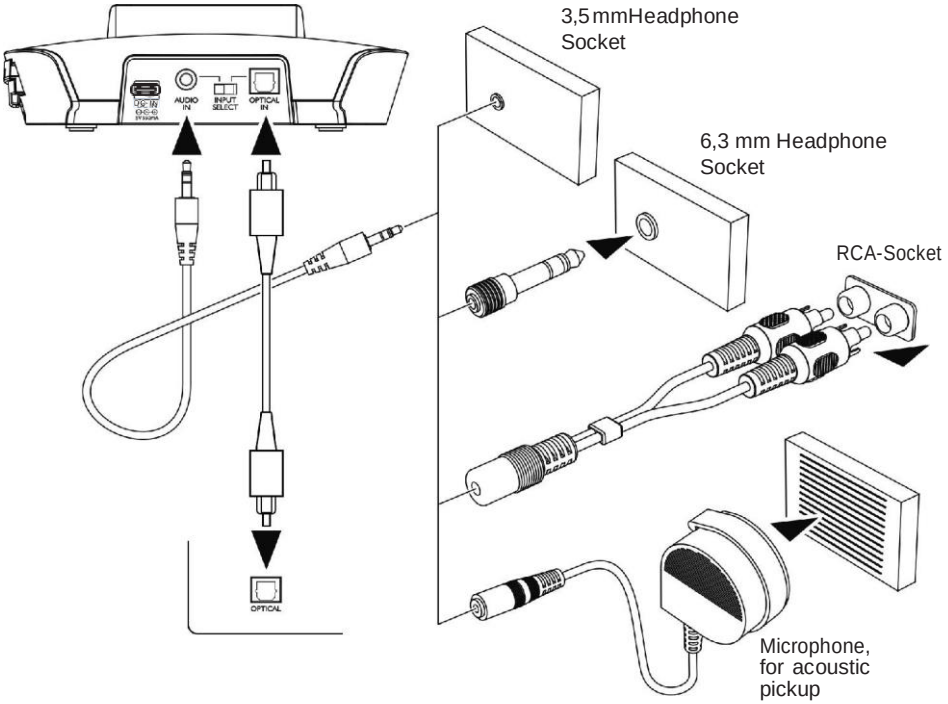


The Green Power Indicator LED will blink as soon as you have connected the Power Adapter to the Electrical Outlet, When the Audio Signal is detected from the Audio Source, and the Green LED Indicator will glow constantly.

**HEADSET RECEIVER**

1. Insert a battery into the Headset Receiver with correct Polarity.

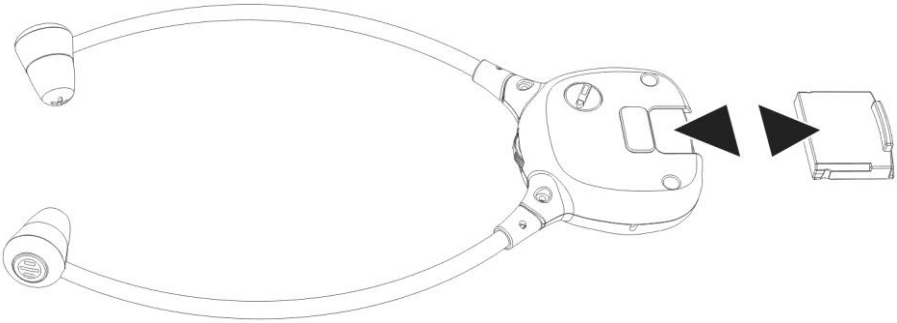

## OPERATION

1. Switch on the Audio Source (TV set or audio component) that the Transmitter is connected to. The Green LED Indicator will glow constantly.
2. Select the On/Off Switch in the Headset Receiver to ON position, then the Green Signal LED Indicator glows.
3. Adjust the Volume for desired sound level, then place it on the head.
4. The signal Green LED Indicator on the headphone will blink slowly with “Beep“ in every minute when the battery level is low. Recharge the battery.

**NOTE**:

Make sure the batteries provided in the packing, is fully charged before first use. Charge the battery for about 3 hours before first use.

RF Transmission of the Transmitter will automatically switch OFF in approximately 5 minutes if there is no Audio Signal, or the Signal that it receives from the Audio Source is too weak for proper reception. However, if the Signal returns to an acceptable level, the Transmitter will automatically switch ON again.

# CHARGING THE BATTERIES

1. Select the On/Off Switch in the Headset Receiver to OFF position.
2. Place the Headphone Receiver on the Transmitter, make sure the Charge Contact touches the Charge Pins on the Transmitter.
3. The Charging process starts automatically. LED Indicator of Main Battery then glows in Red constantly. It will glows in Green about **2** hours after the battery is fully charged.
4. A spare battery is provided for sustained enjoyment. Simply insert it into the Transmitter for Charging. LED Indicator of Spare Battery will then glow in Red constantly. It will glows in Green about **2** hours after it is fully charged.

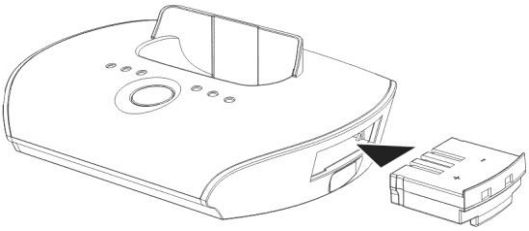

**WARNING:**

Never attempt to recharge conventional dry cells.
Batteries (battery pack or batteries installed) shall not be exposed to excessive heat such as sunshine, fire or the like
Never use another type of battery or non-rechargeable batteries to replace the rechargeable batteries supplied.
When the headphones are not in use, move the switch to the OFF position to avoid damaging the batteries.
The batteries must always be fully charged before first use. An initial **3** hours charge is required to guarantee an acceptable service life for the rechargeable batteries. Always ensure that the Headphone Receiver is switched to OFF position while the batteries are charging.
Excessive sound pressure from earphones and headphones can cause hearing loss.

**IMPORTANT**:

This unit should be operated with rechargeable batteries only. When replacing the batteries or when disposing of the unit, always comply with applicable laws relating to the disposal of batteries. Please place them in a proper disposal container to ensure that they are eliminated safely and in an environmentally friendly way.

# TONE CLARITY

When necessary, Tone Clarity to Headset Receiver can be adjusted on the Transmitter, from orange LED of 1, 2 and 3. Simply press the Tone Clarity Button to select and match to your level of hearing aid capability.

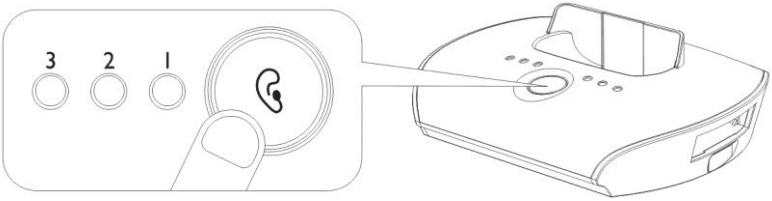


The Tone Speech Intelligibility can be enhanced individually on the transmitter with the following settings.

| Setting | Orange LED Indicator | Effect |
|---|---|---|
| Default | 3 2 1 | No Adjustment |
| 1 | 3 2 1 | Enhances Treble and Bass |
| 2 | 3 2 1 | Enhances Treble only |
| 3 | 3 2 1 | Enhances Bass only |

## USE THE HEADSET PROPERLY

Please use the headset in proper way to prevent damage it by adding the additional pressure in wrong force point.

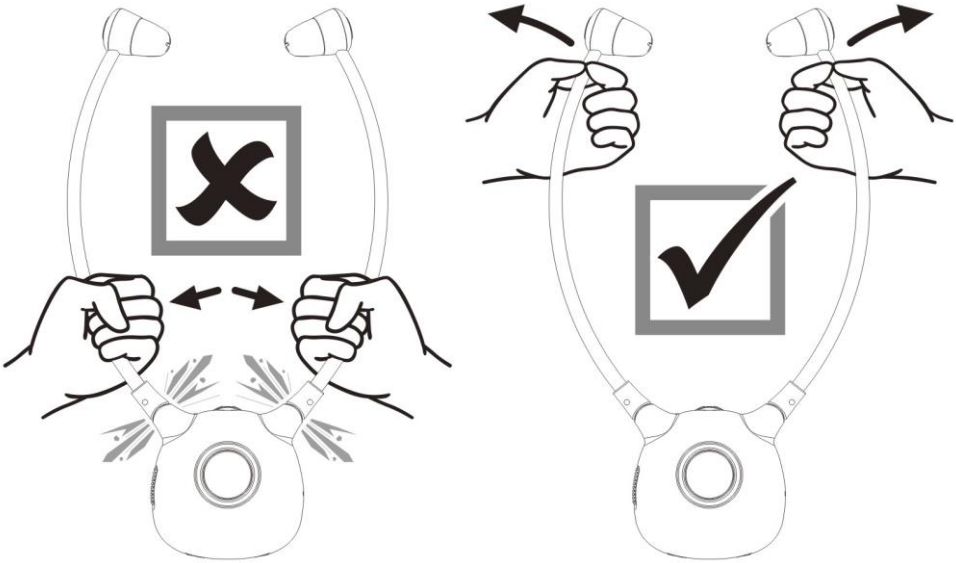

## TECHNICAL SPECIFICATIONS

| | | |
|---|---|---|
| Transmission mode | : | **Digital Hopping System** |
| Carrier frequency | : | 2.4GHz ISM BAND I |
| Operating voltage | : | Transmitter : 5V 550mA |
| | | Receiver : 3.7 V, 350 mA Lithium Polymer Battery |
| Frequency response | : | 30 Hz – 20 KHz |
| Distortion | : | <0.5% |
| Signal-to-noise ratio | : | >75 dB |
| Range | : | Up to 20 meters (open area) |

## TROUBLESHOOTING

NO SOUND

- Ensure that the mains adapter is pushed fully into the power outlet and that its cable is properly connected to the DC IN connector on the transmitter.
- Ensure that the Headset Receiver Power ON/OFF switch is switched to ON.
- The charge level of Battery inside Headset Receiver may be too low. Recharge the battery or replace them with fully charged batteries.
- Ensure that the TV set, Hi-Fi system or audio component is switched ON and set to a channel that broadcasts an audio signal.
- Use the Volume Control on the Headset Receiver to increase the sound level.
- The connected audio/video equipment may not be in playback mode. Start playback on by the equipment.
- The Headset Receiver output level is set too low. Adjust the volume to a suitable level.

DISTORTION

- The charge level of Battery inside Headset Receiver may be too low. Recharge the battery or replace them with fully charged batteries.
- The Headset Receiver may be too far away from the Transmitter. Move closer to it.
- The Audio Signal input level is too low. Increase the volume from the audio source.

**In case the headset receiver cannot be linked with the transmitter. Please follow the following procedure for Pairing:**

1. Turn **OFF** the power of the Transmitter.
2. Turn **ON** the Headset Receiver.
3. Press and Hold the MIC Button for about 5 seconds, the Green LED flash quickly in the Headset Receiver, then turn **ON** the power of the Transmitter.
4. The Headset Receiver and the Transmitter is then Paired automatically, and the Green LED on Headset Receiver lights steadily.

**WARNING:**

Excessive sound pressure from earphones and headphones can cause hearing loss.

**IMPORTANT :**

– Don’ t disposal of a battery into fire or a hot oven, or mechanically crushing or cutting of a battery, that can result in an explosion.

– Don’ t leaving a battery in an extremely high temperature surrounding environment that can result in an explosion or the leakage of flammable liquid or gas;

– Don’ t leaving a battery subjected to extremely low air pressure that may result in an explosion or the leakage of flammable liquid or gas.

**CAUTION :**

Risk of explosion if battery is replaced by an incorrect type.

The mains plug power adapter is used as the disconnect device,

The socket-outlet shall be installed near the equipment and shall be easily

RECYCLING

This product bears the selective sorting symbol for Waste electrical and electronic equipment (WEEE). This means that this product must be handled pursuant to European directive 2012/19/EU in order to be recycled or dismantled to minimize its impact on the environment. User has the choice to give his product to a competent recycling organization or to the retailer when he buys a new electrical or electronic equipment.

The symbol indicates class II equipment

The symbol indicates AC voltage

The symbol indicates DC voltage

For indoor use only

VI

The symbol indicates energy efficiency marking

NOTE: This equipment has been tested and found to comply with the limits for a Class B digital device, pursuant to Part 15 of the FCC Rules. These limits are designed to provide reasonable protection against harmful interference in a residential installation. This equipment generates uses and can radiate radio frequency energy and, if not installed and used in accordance with the instructions, may cause harmful interference to radio communications. However, there is no guarantee that interference will not occur in a particular installation. If this equipment does cause harmful interference to radio or television reception, which can be determined by turning the equipment off and on, the user is encouraged to try to correct the interference by one of the following measures:

- Reorient or relocate the receiving antenna.
- Increase the separation between the equipment and receiver.
- Connect the equipment into an outlet on a circuit different from that to which the receiver is connected.
- Consult the dealer or an experienced radio/TV technician for help.

Any changes or modifications not expressly approved by the party responsible for compliance could void the user ' s authority to operate the equipment.
This device complies with Part 15 of the FCC Rules. Operation is subject to the following two conditions:
(1) this device may not cause harmful interference, and
(2) this device must accept any interference received, including interference that may cause undesired operation.

**Work temperature: 0°C~40°C:**

- CAUTION: Danger of explosion if battery is incorrectly replaced.Replace only with the same or equivalent type.
- No naked flame sources, such as lighted candles, should be placed on the apparatus.
- Attention should be drawn to environmental aspects of battery disposal.
- The batteries shall not be exposed to excessive heat such as sunshine, fire or the like.

– WARNING: Please refer the information on exterior bottom enclosure for electrical and safety information before operating the apparatus.

– Use only power supplies listed in the user instructions.

Adapter model: YLJXA-E050055 or YLJXA-U050055 or YLJXC-050055
Made By: Dongguan Yinli Electronics Co., Ltd

Correct Disposal of this product. This marking indicates that this product should not be disposed with other household wastes throughout the EU.To prevent possible harm to the environment or human health from uncontrolled waste disposal, recycle it responsibly to promote the sustainable reuse of material resources. To return your used device,please use the return and collection systems or contact the retailer where the product was purchased. They can take this product for environmental safe recycling.