MOWRATOR

User Manual

Mowrator S1 21” AWD - ZMLMS214WG1
V1.1 2024.06

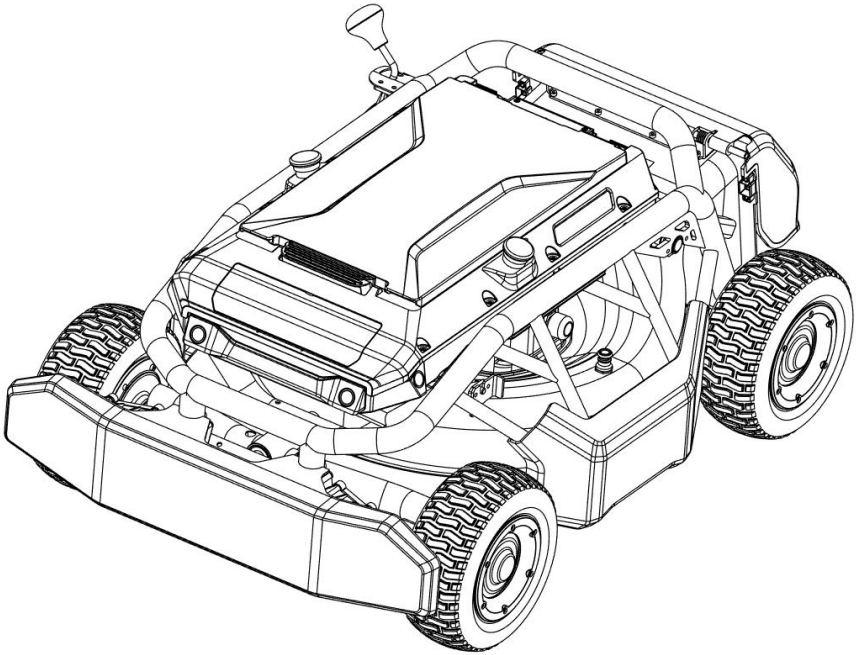

Warning：
To reduce the risk of injury, users must read and understand this User Manual before using this product. Please keep this manual properly for future reference.

You can get the instructional video by scanning the QR code below.

MOWRATOR

Sincerely thank you for purchasing the high-quality Mowrator S1 21" AWD smart lawn mower produced by Shenzhen Zongguan Innovation Co., Ltd.! Hope you enjoy using it.

If you encounter any problems during use, or if you need to order replacement parts or apply for repairs, please contact us through the following methods, and we will arrange professionals to provide you with solutions as soon as possible.

website：https://www.mowrator.com
Mail：support@mowrator.com

This product will continue to be iterated and upgraded, please refer to the actual product. Shenzhen Zongguan Innovation Co., Ltd. reserves the right to update products.

Contents

Mowrator S1 21'' AWD 1
Safety Signs 1
Product description 8
Unboxing 11
Usage Guide 14
Security protection project 19
Optional Attachments 20
Firmware upgrade 21
Maintenance 21
Troubleshooting 22
Mowrator S1 Professional Remote Controller 26
Product description 26
Operating Instructions 28
Troubleshooting 33
Storage Guidelines 34
SteadyForce 56V 12&18Ah Battery 34
Safety Signs 34
Product Overview 35
Troubleshooting 39
Storage Guidelines 39
Warranty Guide 40
Disclaimers and Warnings 40
FCC Statement 42

Mowrator S1 21'' AWD

Safety Signs

Safety signs and their instructions deserve your careful attention and understanding.

The purpose of safety signs is to alert you to possible hazards.

Safety signs by themselves do not eliminate any hazard and cannot be used for accident prevention.

⚠**Warning：** Be sure to read and understand all safety instructions in this manual, and always follow the safety instructions when operating, including paying attention to and understanding all safety symbols before using this tool, such as "DANGER", "WARNING" and "CAUTION". Failure to follow all instructions listed below may result in electric shock, fire, or serious personal injury.

Icon meaning

icon	describe	meaning
	Risk of cutting and dismemberment.	To reduce the risk of injury, keep hands and feet away from rotating parts.
	Warning.	Pay attention to personal safety, there is potential danger of personal injury.
	Watch out for splashes and throws.	Be aware that the machine may throw blades, rocks, or other objects in any direction.
	Pay attention to avoidance.	Pay attention to the direction of machine travel to avoid being shredded.
	Gently handle with care	Avoid dropping or impacting.
	Avoid rain and water exposure	Do not place in a humid environment, Avoid rain and water exposure.
	Electric shock hazard	Avoid direct contact with positive and negative poles.
	Risk of explosion	Avoid piercing, short-circuiting, or unauthorized disassembly.

	Keep away from flammable materials	Keep away from flammable materials to prevent fires.
	Prevent burns.	The arrow indicates the area with high temperature. Be careful to avoid touching it to prevent burns.
	Recyclable	Recycling, can be reused for recycling after disposal.
	Read and understand the user manual.	Please read and understand the user manual carefully before using the machine.
	Protect eyes.	Wear safety goggles when operating the machine, it is recommended to use safety goggles marked as ANSI Z87.1 compliant.
	No use in rainy weather.	It is forbidden to use it in the rain, and do not place the machine in the rain or humid environment. Make sure to keep it dry.
	No splashing.	Flushing and showering are prohibited in this area.
MAX 75%	Upper limit of climbing.	The machine can only be used or parked on slopes not exceeding 75%.
	Keep hands and feet away from the blade deck.	Keep hands and feet away from the cutting area as sharp blades may cut off fingers and toes.
	Not allowed to ride.	Do not stand or sit on the machine.
	Please do not repair without authorization.	Non-professionals who have not read the instructions in detail are prohibited from dismantling and repairing the machine.
	Check the guards are in place.	When the machine is in operation, do not disassemble or open safety protection devices such as protective covers.

	Keep distance from bystanders.	Please keep a safe distance of more than 100 feet from bystanders and children.
	Limit distance from remote controller.	The remote controller is recommended for use within 65 feet of the machine.
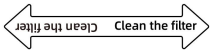	Clean the filter.	The filter at the position indicated by the two arrows needs to be cleaned regularly.
	Lock the battery clasp	After placing the battery，Lock the clasp.
⎓	Direct current	Type or a characteristic of current
ac	Alternating current	AC (Alternating Current)
V	Volt	Voltage
mm	Millimeter	Length or size
in.	Inch	Length or size
kg	Kilogram	Weight
lb	Pound	Weight
L	Litre	Volume
s	Second	Time
min	Minute	Time
h	Hour	Time
bu	Bushel	Volume
RPM	Revolutions Per Minute	Rotational speed
℃	Celsius Temperature	Temperature
℉	Fahrenheit Temperature	Temperature

Safety rules

⚠ **Danger：** This machine needs to be operated according to safety rules and operating instructions are included in this manual. As with any type of electrical equipment, operator carelessness or error can result in serious injury. The machine may throw objects, sever limbs and other objects. Not following safety instructions may result in serious injury or death.

⚠**Warning：** When using the electric lawn mower, always follow basic safety precautions to reduce the risk of fire, electric shock, and personal injury. The basic precautions include the following:

1. Keep children away from the mowing area and under responsible supervision, as a accident may occur if the operator is not alert to the presence of children. Children are often attracted to lawn mowers and lawn mowing activities. They do not understand the dangers involved. Never assume that children will be left where you last saw them. If children enter the working area of the machine, remain alert and turn off the mowing. machine.
2. Pay attention to blind corners, doorways, corners, shrubs and other places that may block the view, to prevent children from the lawnmower or causing other injuries.
3. Only those who are familiar with these safety operating rules and exercise caution can use this machine. It is prohibited for individuals under the age of 18 to use it.

⚠**Warning：**

1. Before attempting to assemble the machine, please read and understand the entire contents of this user manual carefully, and follow all instructions on the machine and in the manual.
2. Before operating this machine, please be completely familiar with the control device and correct use of this machine.
3. Please keep this manual properly for future reference and ordering replacement parts.

When using this machine, please be cautious and ensure that the following is always followed:

1. The operator of the machine needs to be responsible, well-trained, and able to follow safety regulations and instructions. Do not allow children to operate the machine. The people with serious physical or mental disabilities are not recommended to operator the machine.
2. Do not operate the machine when you are sick, tired or unwell, and be aware of the effects of alcohol or drugs on the body.
3. Do not start the machine when it lacks protective devices or has other abnormalities. If there is any abnormality or damage, please repair it before use.
4. Only operate the machine in a suitable environment with good visibility,temperature within the range of 32-104℉（0-40℃）. Avoid using it in rain, snow, heavy dew, or other severe weather conditions.

5.When the machine is running, do not put your hands or feet close to the moving parts of the machine or place them under the machine. The high-speed rotating blades may cut off your hands and feet.

6. When operating the machine, please always look at the range of movement of the machine and be ready to stop at any time. When the machine is traveling on non-working roads, please release the blade-start button to stop the blade rotation.

7. Please keep a sufficient safe distance from bystanders, children, and pets, and be careful of flying foreign objects that may injure people.

8. Be extra careful when operating on slopes. Do not operate the machine on these areas: slopes greater than 75%, sand, gravel, swamps, or dangerous working areas with foreign objects. Pay attention to the movement of the machine. Foreign objects may be sucked into the machine or thrown out.

9. It is prohibited to operate the machine to actively hit any solid objects, such as sprinklers, cans, trees, stones and other objects. If you accidentally hit a foreign object, stop the machine immediately and remove the battery, and check whether the machine is damaged.

10. During the operation of the machine, if there is any abnormal sound, vibration, smoke, or the machine suffers a violent collision, or falls from a height, etc., please stop the machine immediately and contact after-sales service.

11.If you accidentally fall, please immediately release the blade-start button and press the stop button to avoid being run over by the machine.

12. Do not stand or sit on the machine under any circumstances, and do not use the machine as a carrier or drag other objects.

13. Don't interfere with the intended function of the safety device, or reduce the protection provided by the safety device.

14. If you need to repair or replace the parts of machine, please stop the machine and remove the battery before operating. Please keep your hands clean and dry during operation. When replacing the blade, you need to wear protective gloves to prevent cuts.

15. Clean and maintain the machine regularly, and replace the blades to keep them sharp so that the machine can perform at its best.

16. When storing the machine, make sure there is no residual grass, leaves, and debris on the machine, and keep away from the flammable materials to reduce the risk of fire.

17. Don't expose the machine or battery to fire or places with excessive temperatures to avoid the risk of fire or explosion.

18. Do not charge the battery in a humid environment or areas easily accessible by non-operators. When charging, please check whether the power socket, power cord, and charging interface are intact and suitable.

19. Under any circumstances, it is prohibited to damage or scrap machines or battery packs by incineration, shredding, submersion, concealment and abandonment. Such actions may lead to fires, explosions or environmental pollution that are difficult to prevent and may lead to unpredictable consequences, such as personal and property damage. Please strictly abide by local laws, regulations and environmental protection regulations when disposing of damaged or scrapped machines.

20. Do not attempt to modify this machine or install accessories that are not recommended for use with the machine. Any such changes or modifications would constitute misuse and could result in a hazardous situation that could result in serious injury.

21. If a situation not covered by this manual occurs, please be careful and handle it properly, and always maintain safety vigilance.

22.If you lend this tool to others, please also lend them this user manual and ask them to strictly follow the manual to prevent damage caused by misuse of the product.

Before starting the machine, please cut off the power and make the following preparations:

1. Please check whether the blade is installed correctly, whether the blade screws are tight, and whether the blade is bent, cracked, worn or otherwise abnormal. If so, please replace the MOWRATOR special blade according to the manual instructions before operating the machine.

2. Please check whether protective devices, such as the grass outlet cover and the grass bag, are intact, in place and working properly.

3. Please check the machine for abnormal noises, loose screws, incorrect component installation and other mechanical structural abnormalities.

4. Please check the work area for stones, toys, fabrics, branches, sticks, faucets, wires and other debris or any other objects that may interfere with machine operation.

5. Please check whether there are any pits, protrusions or other abnormalities in the working area. Uneven terrain may cause the machine to be stuck or cause damage, leading to hidden dangers.

6. Before starting the blade, please adjust the blade to a suitable height level and confirm that the machine is in a safe position.

7. After powering on the blade, when you release the blade-start button on the remote controller, the blade should stop rotating immediately. If not, please stop using it immediately and contact an authorized service provider.

8. If you feel the noise is too loud, please wear protective earmuffs before operating the machine. If there is dust during operation, please wear a face mask or dust mask.

9. Please operate the machine on a solid place and avoid operating on slippery roads to avoid falling and causing personal injury.

10.Please wear suitable clothes, long trousers, non-slip and sturdy shoes, tie up your long hair, and wear goggles before operating. Loose clothes may be caught by moving parts. Please wear relatively tight clothes to reduce this risk. Due to this risk, never operate this machine barefoot, wearing sandals or light shoes (such as canvas shoes).

Other tips

1. If the grass is particularly tall or dense and thick, it may cause the machine to become clogged and shut down. Please mow the lawn mutiple times, only cut off about one-third of the height of the grass each time. Then mow again to the target height. If it still doesn't work, please reduce the spacing between lawn mowing routes during mowing, so the uncut grass only occupies part of the width of the blade, not all.

2. The best time to mow is in the late afternoon when the grass is dry and the operator will not be exposed to direct sunlight.

3. Wet grass is difficult to be sucked up by the machine, and the mowing effect may be affected.

4.If the mowing effect is not satisfactory, please follow the instructions below:

(1)Please check whether the blade is worn and dull, and replace it with a new blade in time.

(2)Please check whether the walking speed when mowing is appropriate. It could be better to slow down.

(3)Please increase the blade speed or switch to the smart model for blade speed. Please refer to the remote controller manual for detail.

(4)Please mow more frequently and reduce the height of cut off part in single mowing.

Special instructions for battery handling:

⚠**Careful! Battery leakage may cause personal injury!**

If there is leakage from the battery, do not contact your eyes or skin. In case of accidental contact, please wash hands and eyes with clean water immediately. If you still feel unwell, please seek medical attention immediately.

If you want to scrap or discard the machine's battery, please do not throw it away with household garbage. Please hand it over to the nearest used battery recycling station or special used battery trash can in accordance with local regulatory requirements.

Product description

This lawn mower is mainly used for landscaping work and is designed to provide you with a simple, efficient, and reliable way to mow the lawn. This manual provides you with the necessary instructions for the correct installation and operation of the lawn mower. Please read this manual carefully to learn how to operate and maintain your product to avoid personal injury and product damage. You can visit the https://www.mowrator.com website to get the latest information on MOWRATOR. If you need repairs, replacement parts or other services, please contact the authorized service provider and provide the product model and serial number, which is on the nameplate in the battery compartment of the machine.

Product parameters

Machine information	Weight	114.6 lb (Without battery)
	Machine size	37.8x25.8x16.7 in (without grass bag) 60.4x26.2x20.3 in (with grass bag)
	Package size	41x27x17 in
	Waterproof and dustproof rating	IP54 (Can protect against light rain)
	Frame	High-strength aluminum alloy frame
	Mowing area per hour	2000 ㎡ 0.5 acre
	Battery type	Detachable battery
Chassis	Steering system	Zero-Turn steering system (ZTR)
	Maximum walking speed	1.5 m/s 3.4 mph
	Maximum Climbing	75%

Cutting system	Blade size	21 in
	Blade cover	DC06 High strength metal material
	Maximum cutting torque	6 ft lb
	Blade height	1.5-4.3 in,5 adjustable gears (1.5, 1.9, 2.6, 3.3, 4.3 in)
	Blade speed	Max 3200 rpm (can be manually adjusted)
	Noise	63 dB (Tested at a distance of 3 meters)
	Emission mode of grass	Mulching / Discharge / Collection
Safety function	Non-contact obstacle avoidance sensor	4 Ultrasonic radars: Front / left /right
	Contact-based obstacle avoidance sensor	bumper sensor
	Tilt protection	support
	Lift protection for the grass outlet cover	support
	Emergency stop button	2 button, press any button to stop working
Radio Frequency functionality	The frequency of signal	2.400~2.480 GHz
	Antenna	built in dual antennas
	Radiated power (EIRP)	9 dBm
Others	Intelligent functions	Cruise control, auto U-turn (IMU based stable driving control system)
	OTA	support

⚠**Note:** The actual stubble height of grass varies with ground conditions and grass types. The gear of blade height should be adjusted according to the lawn.

Battery life

	12Ah Battery	18Ah Battery
Light load	1.2~1.5h	1.75~2.25h
Medium load	0.9~1.2h	1.25~1.75h
Heavy load	0.5~0.9h	0.75~1.25h

⚠**Note：** Actual run time will vary depending on grass quality (variety, density, moisture, etc.).

How to improve battery life:

The cut-off height should not exceed one-third of the height of the grass at one time.

Use a self-sharpening, low-lift blade.

Make sure the blade is sharp.

Set an appropriately low blade speed or use the blade smart mode.

Move the mower at the appropriate speed.

Make sure the inner wall of the blade cover is clean.

Part Name

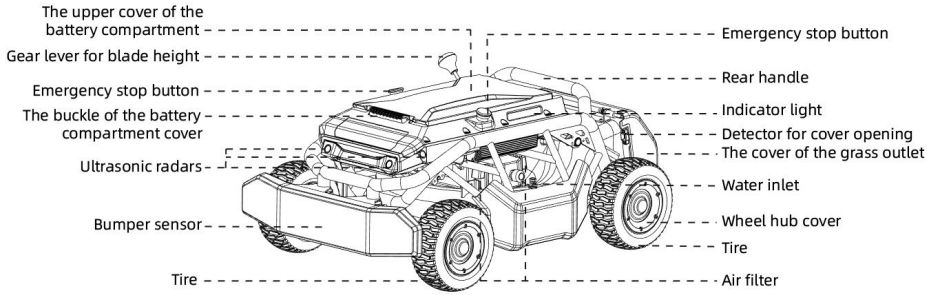

⚠**Warning：** To use this machine safely, you need to understand all the information in this user manual. Please be familiar with all functional instructions and safety rules before operating the machine.

Safety protection device

1. The bumper has built-in sensors. It will stop when it hits an obstacle. At this time, the indicator light will turn red, and a prompt will appear on the remote controller that the bumper has hit an obstacle.

⚠ **Note：** Avoid hitting sharp objects with the bumper (such as steel wires, stones, sharp branches, etc.). If it is seriously damaged, it needs to be replaced in time.

2.When the ultrasonic radars detect an obstacle, it will reduce the walking speed or stop the machine. This can be relieved by controlling the machine to move in the direction without obstacles. For different obstacle distances, the corresponding indicator lights and machine status are as follows:

Obstacle distance	**Indicator color**	**Machine state**
0-25cm	red light	Stop the car

25-45cm	yellow light	Parking
45-90cm	yellow light	Limit walking speed
>90cm	green light	No speed limit

Note: Ultrasonic radar is not able to detect all obstacles. Its detection capability will be reduced or lost in the following cases: 1) the height of obstacle is less than 20cm 2) the surface is made of sound-absorbing materials, 3) the reflective surface is too small 4) the reflection angle is too large. Please pay attention to safety in use.

3. The grass outlet cover has a built-in sensor for opening detection. When the cover is opened, the blade will stop to ensure safety. At this time, the indicator light turns red. It can be released by closing the grass outlet cover or hanging the grass bag on the outlet.

4. If the tilt angle of the machine ≥40°, the tilt sensor will be triggered to stop the car. At this time, the indicator light will turn red. It can be restored when the tilt angle is within 35°.

5. When any emergency stop button is pressed, the machine will stop immediately. At this time, the indicator light will turn red. It can be released by turning the emergency stop button.

Unboxing

1. First take out all accessories from the carton, then grasp the front handle and rear handle at the same time, carefully lift the lawn mower up and take it out of the carton. During the process, do not lift the cover, button, guard or cable of the lawn mower to avoid damage.
2. Please carefully check whether all parts in the list are included, and ensure that the product has not been damaged during transportation. If there is any damage or abnormality, please pack the product in its original packaging and return it to the place of purchase.

Install drive wheels

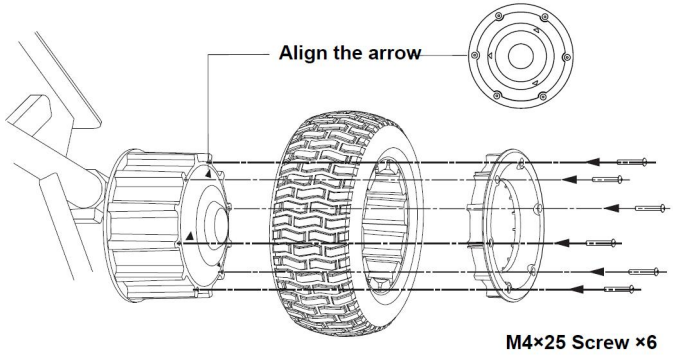

Steps：

①.Install the drive wheel into the travel motor with the tire pattern pointing in the forward direction of the machine.

②.Align the three triangular arrows on the hub cover with the triangular arrows on the motor and install the hub cover.

③.Insert and tighten 6 screws（M4x25mm）into the 6 holes on the hub cover to complete the installation.

④.Install the driving wheel on the other side in the same way.

Install the grass outlet cover

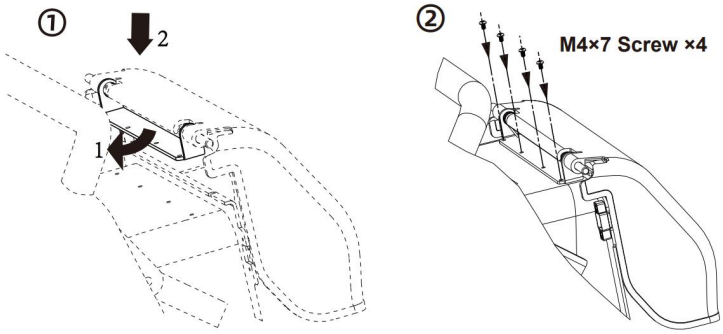

Steps：

①.Align the 4 holes on the grass outlet cover with the 4 holes on the grass outlet.

②.Install and tighten 4 screws（M4x6mm）to complete the installation.

③.Pay attention to avoid pressing the sensor wire for cover opening.

Install the grass bag

⚠**Note:** Before installing the grass bag, please check whether the grass bag is damaged. If it is damaged, please replace it.

Steps to assemble grass bag:

Slide the grass bag fabric onto the metal frame of the grass bag, and then fasten the rubber strips around the opening of the bag to the metal frame.

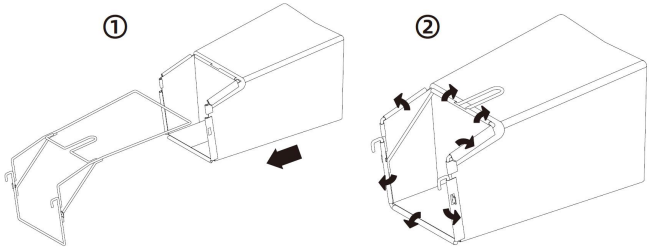

Steps for hanging grass bag：

Open the grass outlet cover and hang the grass bag to the corresponding position on the machine.

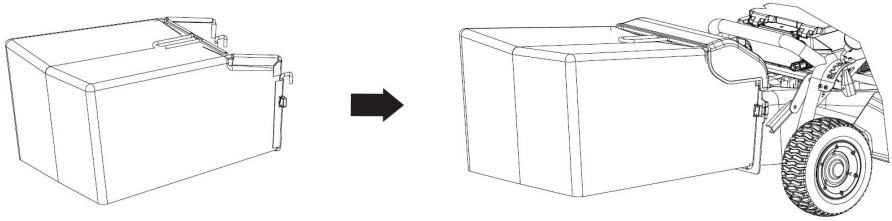

Note： Before use, please check the two magnet sensors on the metal frame of grass bag to see if it is damaged or missing. If it is, it will cause the machine to abnormally report an error. Please replace it or contact after-sales service.

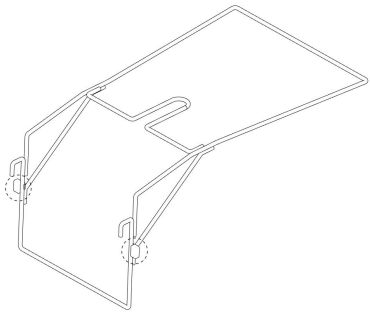

Install the mulching insert

If you want to shred the grass instead of discharging it out or collecting it into the grass bag, open the grass outlet cover, and insert the mulching insert in the direction of the arrow.

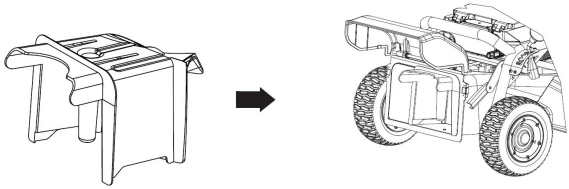

Usage Guide

Start the lawn mower

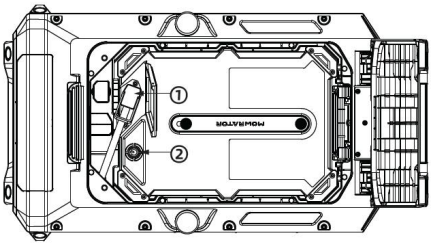

①. Insert the cable plug into the holder on the battery. Note that the plug needs to be inserted to the bottom.

②. Press and hold the power button on the battery until the 4 indicator lights light up in sequence, and then the startup is completed.

Note: Before starting the machine, please check whether the cables are connected properly, whether the battery buckle is fastened, whether the battery power is sufficient, etc.

Adjust the height of the blade

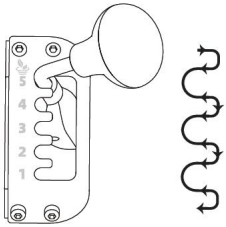

①.Hold the machine frame with one hand to maintain stability, and hold the handle for blade height adjustment with the other hand.

②.Push the gear lever out of the tooth, then slide it up or down to the required gear, and then release your hand and let the gear lever get stuck on the other tooth.

③.There are 5 levels for blade height adjustment. Please see the product parameter table for specific height values.

Remove the battery

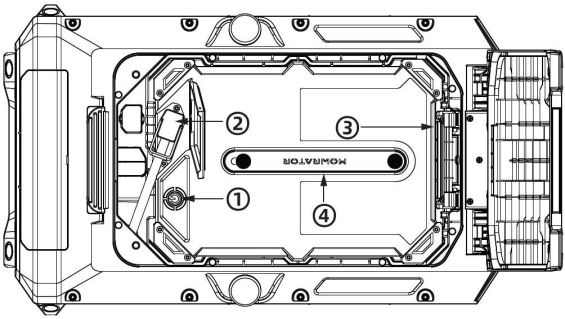

①. Press and hold the battery power button to turn off the battery power;

②. Open the battery decorative cover and pull out the connection cable;

③. Unlock the battery buckle;

④. Hold the battery handle and lift out the battery.

Blade selection

The standard configuration of MOWRATOR is a low-lift blade. You can choose a high-lift blade or a high-lift shredding blade according to your needs.

name	Function	Illustration
Extended runtime blade	A conventional blade can meet the needs of most lawn mowing scenarios.	
High-lift blade	Provides greater lift and better grass collection effect.	
High-lift shredding blade	Provides greater lift, better grass collection and grass shredding effect.	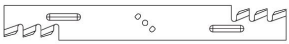

Note:

1. High-lift blades and high-lift shredding blades will reduce the machine’s battery life.

2. Wear protective gloves when maintaining and replacing blades.

3. A 15mm wrench is required to replace the blade.

Remove and install the Blade

Note：

1. It is recommended to replace the blade regularly. If the frequency of use is high or the environment is harsh, the replacement frequency will be faster. If the blade is found to be bent, deformed, blunt, cracked, etc., please replace the blade in time.

2. You need a torque wrench to install the blade correctly. If you encounter any problems during installation, please contact an authorized service dealer.

3. The blade is sharp. Contact with the blade may cause serious personal injury. Please wear gloves before operating.

4. Pay attention to the removed screws to avoid losing them.

Disassembly and installation process steps:

①.Turn off the power and remove the battery

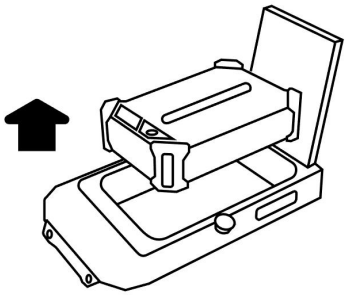

②.Place the machine upright

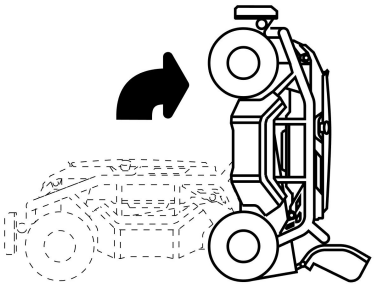

③.Turn counterclockwise to remove the screws (fig1)

④.Replace blade and turn the screw clockwise to tighten (fig2)

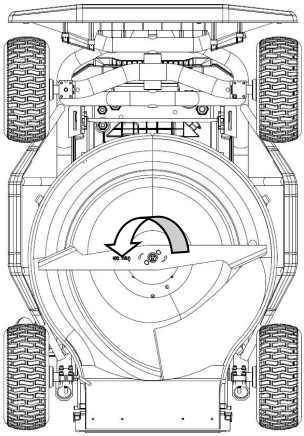

fig1

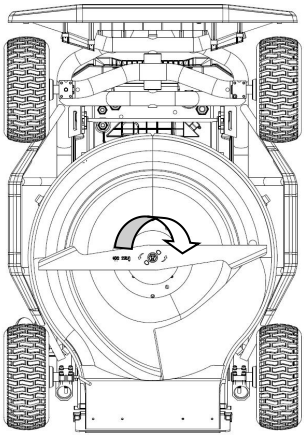

fig2

Cleaning the blade cover

The blade cover is equipped with a quick-release water inlet for connecting the faucet. You can clean the inner wall of the blade cover by filling the inlet with water. The operation steps are as follows:

①. Move the machine to a flat and hard ground.

②. Connect the water pipe with the water inlet and open the faucet.

③. Stand in a safe position away from the machine and start the blade until no grass clippings are flushed out by the water.

④. Turn off the machine and clean other grass clippings and dirt from the machine.

⑤. Store the machine in a dry place.

Note： In order to ensure that the machine can achieve the best results every time you use it, please clean the machine in time after each operation is completed.

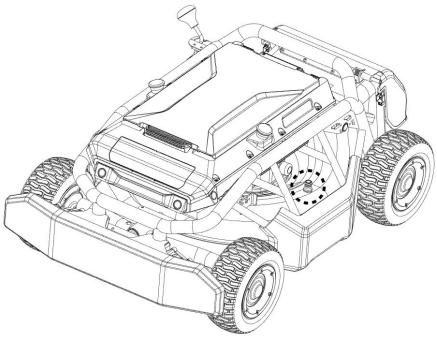

Indicator light status

Light status	Meaning	Action
Steady green	Everything is fine with the robot.	——
Breathing green	Not connected with remote controller.	Turn on the remote controller and connect the robot correctly.
Flashing green	The robot is being paired with remote controller.	The remote controller enters the pairing mode and correctly communicates with the machine.
Steady blue	Assisted driving function is running.	The robot runs automatically, please pay attention to safety.
Yellow progress bar on white background	Robot is in preparation.	Wait for preparation to be completed.
Steady Yellow	There is a warning.	For details, please refer to the warning content and operating tips on the remote controller screen.
Steady Red	There is an error.	For details, please refer to the error content and operation tips on the remote controller screen.
Flashing sky blue	The robot is in OTA mode and correctly connected to the remote controller.	Connect to the mobile app to start upgrading and wait for the upgrade to complete.
Breathing sky blue	The robot is in OTA mode, but the remote controller is not connected.	Connect the remote controller to the mobile APP and perform OTA operations according to the prompts.

Note：

1. To prevent overloading, slow down the cutting speed or increase the cutting height, and never try to remove too much grass at one time.

2. The battery pack will generate heat during operation. Heat dissipates more slowly in hot weather. If the battery temperature exceeds 140°F (60°C) during operation, a protective circuit will immediately shut down the mower to protect the battery pack from heat damage.

Security protection project

Protection item	Triggering conditions	Machine action	Release condition
Emergency stop	Press any emergency stop button on the chassis.	Stop all movement behaviors such as blade rotation and walking.	Release both two emergency stop buttons.
Tilt protection	The body tilt angle is greater than 40°.	Stop the blade rotation and walking.	The body tilt angle is less than 35°.
Crash protection	The bumper sensor is triggered when it hits an obstacle.	Stop the blade rotation and walking.	Manually release protection according to the prompts on the remote controller screen.
Warning for obstacles (from ultrasonic detection)	Obstacles are detected in any direction from the front, left or right, from 1ft.(30cm) to 3ft.(90cm) away from the machine.	Limit speed or stop for movement in this direction.	Move in the opposite direction to the obstacle to release it.

Protection item	Triggering conditions	Machine action	Release condition
Stop for obstacles (from ultrasonic detection)	Obstacles are detected within 1ft.(30cm) from the machine in any direction from the front, left or right.	Stop the blade rotation and walking.	Move in the opposite direction to the obstacle to release it.
Error for the cover opening of the grass outlet	The cover of grass outlet is opened.	Stop the blade rotation and walking.	Close the cover of grass outlet, or hang the grass bag.
Warning for remote over range	The distance between the remote controller and the robot exceeds 65ft., but does not exceed 164ft.(turn on the ultrasonic sensor).	Limit forward speed and prohibit backward. Movement.	remote controller returns within 20m.
Stop for remote over range	The distance between the remote controller and the robot exceeds 164ft. (turn on the ultrasonic sensor).	Stop the blade rotation and walking.	Make sure the remote controller is within 131ft. from the robot.

Optional Attachments

Name	Function	Diagram
Auto Dumping Module	Auto-dump the clipping with just a button press. Used to improve working efficiency.	
Super Vacuum Module	Powerful impeller fan optimizes suction for collecting leaves.	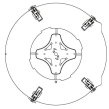
12/18Ah Battery	Optional battery packs with 12Ah or 18Ah capacity. Higher capacity	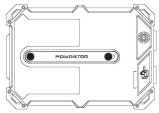

	allows for extended runtime.	
All Terrain Tires	100mm wide tires improve traction and maneuverability.	

Firmware upgrade

1. Download and install MOWRATOR APP from https://www.mowrator.com.
2. Please ensure that your phone, remote controller, and machine are fully charged.
3. Turn on the robot and connect the remote controller to the robot.
4. Use the included OTG cable to connect the remote controller and mobile phone.
5. Open the MOWRATOR APP and operate according to the prompts in the APP interface.

Maintenance

1. When maintaining the machine, please turn off the power and remove the battery.
2. Please clean the grass clippings, dust, mud and other attachments on the inner wall of the blade cover regularly.
3. Please check and tighten all the nuts, bolts, screws and other fasteners regularly.
4. Please check regularly if the bumper is seriously damaged. If so, please replace it in time.
5. Please check and repair all paint peeling and scratches regularly to prevent rust.
6. Please clean the dust and grass clippings on the air filter regularly, which is indicated by the arrow on the sticker on the machine.

7.Before using the machine again after maintenance, please make sure that there is no abnormality in the machine.

⚠**Warning：** To ensure safety and reliability, all repairs should be performed by professional person.

Storage and safekeeping

1. Please store the lawn mower in a cool, dry and covered place, away from children.
2. It is prohibited to place the machine with the top side down.

3. It is prohibited to place objects exceeding 20Kg on the top of the machine.

4. Do not store in environments with flammable, explosive and other dangerous gas. Keep away from flammable materials, corrosive substances and liquids, such as fertilizers or rock salt.

5. If the battery is stored for over 3 months, place the machine in an environment of 32-95℉ (0-35℃). If the battery is stored for no more than 1 month, place the battery in an environment of -4-113℉ (-20-45℃). For long-term storage, please charge the battery to 70 % or above and remove the battery from the machine.

6. Do not cover the machine with solid plastic sheeting. It can trap moisture around your lawn mower, causing rust and corrosion.

7. The machine can be stored upright, but it needs to be placed on a hard and stable ground, because if the machine tips over from the upright position, it may cause damage to the machine or personal injury. When the machine is in the upright position, always keep it stable and out of the reach of children. If there are safety hazards, store the machine horizontally.

Troubleshooting

Common malfunctions	**Possible Causes**	**Solution**
Robot cannot start	Battery exhausted.	Charge or replace the battery.
	The battery cable is not plugged in properly.	Check and reconnect the battery cable.
	Battery is too hot/cold.	1.Wait for the battery to return to normal temperature and try again. 2.Clean the dust and grass clippings on the air filter regularly.
	There is a short circuit.	Check the battery connector for water or conductor debris.

	Unofficial battery or battery is damaged.	Restart and try again, or replace the battery.
The blade cannot rotate or stops automatically	The robot is in emergency-stop / stop state.	After confirming safety, release the two emergency stop buttons located on the chassis and the stop button located on the remote controller.
	The robot detects safety hazards such as obstacles being too close, collision, excessive tilt, opening of grass outlet cover, over range of remote controller, etc. The robot is in a protective stop state.	For details, see the error content on the remote controller screen. Resolve the error condition and press the button on the remote controller to clear the error state. Then try again.
	Blade motor stalls or fails to start.	Move the robot to a position where the grass is low, raise the blade height and try again. Or you can reduce the spacing between lawn mowing routes so the uncut grass only occupies part of the width of the blade. If it still cannot start, please cut off the power, remove the battery and check whether the blade is stuck by branches, stones, grass blades, etc. After clearing the error condition, press the button on the remote controller to clear the error state and try again.
	The power system of the blade is overheating.	Wait for the temperature to return to normal and try again.

	Battery low, the blade is disabled.	Charge or replace the battery.
The robot cannot walk or stops automatically	The robot is in emergency-stop or stop state.	After confirming safety, release the two emergency stop buttons located on the chassis, and the stop button located on the remote controller.
	The robot detects safety hazards such as collisions, opening of the grass outlet cover, and over range of remote controller. The robot is in a protective stop state.	See the error content on the remote controller screen for details, handle the error condition and clear the error state on the remote controller. Then try again.
	The robot detects an obstacle in the direction of movement.	Remove the obstacle or move in the opposite direction to clear the error state.
	Travel motor stalled.	Please cut off the power and take out the battery to check whether the running wheels are stuck by branches, stones, grass, etc. After clearing the error condition, press the button on the remote controller to clear the error state and try again.
	The power system of chassis is overheating.	Wait for the temperature to return to normal and try again.
The mowed lawn is not neat	The blade is dull.	Replace the blade or sharpen it.

	Improper blade height.	Adjust to the appropriate blade height.
	The grass clippings are not collected.	Hang the grass bag.
No grass collection or poor grass collection effect	The blade is severely worn.	Replace the blade or use a high-lift blade.
	The blade height is too low or the grass is wet.	Increase the blade height, or wait until the grass is dry before mowing, or reduce the spacing between lawn mowing routes.
	Blade speed is too low.	Increase the blade speed or switch to Smart mode.
The machine has short battery life	The load of blade is too large.	Increase blade height and travel slower to reduce the load of blade.
	The blade is dull.	Replace blade or sharpen it.
	Blade speed is too high.	Reduce blade speed or switch to Smart mode.
Excessive vibration and abnormal noise	The blade is loose or bent, causing imbalance.	Tighten the blade nut or replace the blade with a normal one.
	Cutting too much grass in a single time or walking too fast.	Increase blade height and move slower.

	There are loose screws or loose structural parts in the vehicle.	Check whether the screws and structural parts of the entire vehicle are fastened intact.
The front wheels are stuck or can't roll	Excessive grass clippings or rust between front wheels and bracket.	Regular cleaning and lubrication maintenance.

Mowrator S1 Professional Remote Controller

Product description

Mowrator S1 Professional Remote Controller is a remote control device specially designed for smart lawn mowers.

It contains travel control joystick, blade motor control, mowing mode switch, etc.

It contains cruise control button, auto left/right U-turn button, and other auxiliary driving function buttons.

It contains a 2.35" touch screen for status display and message prompts. It comply with safety regulations and allow users to upgrade.

Please read this manual carefully to understand how to operate and properly maintain your product, to avoid product damage or personal injury.

You can visit the https://www.mowrator.com website to get the latest information on MOWRATOR.

If you need repair or other services, please contact the authorized service provider and provide the label sticker located on the back of the remote control. product model and serial number.

Product introduction

The names and functions of each component are as shown in the figure:

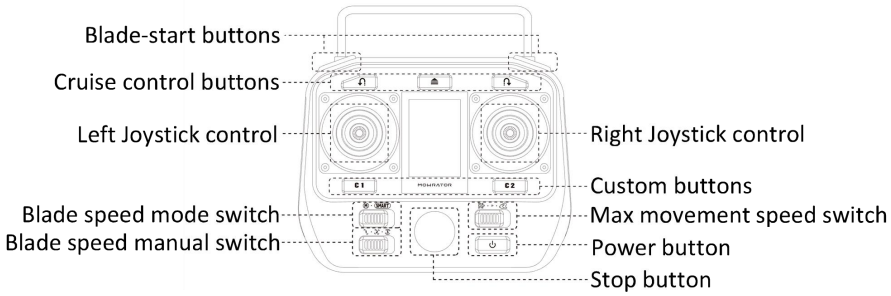

Product parameters

Device information	Model	ZMRCSAFG1
	Weight	1 lb
	Size	6.9x6.7x2.3 in
Battery and charging	Battery	Built in 18650 lithium-ion battery
	Battery nominal voltage	3.6V
	Battery capacity	2550mAh
	Battery energy	9.18Wh
	Battery life	8h
	Charging interface	USB Type-C
	Charging voltage	5V⎓
	Charging current	Max 1A
	Charging time	3h
Screen	Resolution	320x480, 241 PPI
	Screen size	2.35 in
	Color bits	16 bits
	Screen brightness	510 nit (can be used for outdoor work)
	Touch mode	capacitive touch
Radio Frequency	The frequency of signal	2.400~2.480 GHz
	Antenna	Built in dual antennas
	Radiated power(EIRP)	9 dBm
Others	Assisted driving function is running	Cruise control, auto U-turn

	OTA	Support

Operating Instructions

Set PIN code

Press and hold the power button to turn on the screen. The first boot requires setting a PIN code. You can later modify or reset the PIN code on the setting page of screen.

Walking control

Move the left joystick forward and backward to control the machine's forward and backward movement. Move the right joystick left and right to control the machine's left and right steering.

⚠**Warning:** Please remote control the machine within the visual range. When the ultrasonic radar or bumper sensor is turned off, the allowed remote control distance is 6m.

Blade motor control

1. Press the left and right blade-start buttons with the index fingers of your left and right hands respectively. Then tap on the confirmation button on the screen to start the blade motor.

2. After the blade starts normally, just keep any one of the blade-start buttons pressed to keep the blade working.

3. Release the two blade-start buttons at the same time, and the blade will stop rotating.

⚠**Warning:**

1. Please ensure that the lawn mower is in a safe condition before starting the blade to avoid cutting stones, water pipes and other objects.

2. Please operate the machine from a safe position and keep your hands and feet away from the operating position of the machine's blade.

3. Please keep a sufficient safe distance from bystanders, children, and pets, and be careful of flying foreign objects that may injure people.

4. If you encounter foreign objects or any abnormality during cutting, please immediately release the blade-start button and press the stop button.

Blade speed adjustment

1. Turn the Intelligent level switch to select the mowing mode. Turn the switch to the far left, and when the corresponding mark is M, it is manual mode. Turn the switch to the middle or far right, and when the corresponding mark is SMART, it is Smart mode.

2. In manual mode, the blade-speed switch is used to switch the blade speed. From left to right, the blade speed is from slow to fast:

   Left: When the switch is moved to the far left, it is a low speed gear, and the speed is about 2600 rpm.

   Medium: When the switch is moved to the middle, it is the medium speed gear, and the speed is about 2900 rpm.

   Right: When the switch is moved to the rightmost position, it is a high gear, and the speed is about 3200 rpm.

Note: The higher the cutter head speed, the better the cutting effect and the shorter the battery life.

Maximum movement speed adjustment

Toggle the max movement speed switch to adjust the maximum speed of the machine. There are three gears from left to right, and the speed is from slow to fast. The corresponding maximum forward speeds are 0.8m/s, 1.2m/s, and 1.5m/s respectively.

⚠**Warning:**

1. Please choose a suitable movement speed for mowing to ensure good mowing effect.

2. To ensure safety, the speed is limited when the machine moves backwards, so the machine's retreat speed will be slightly slower.

Assisted driving

The assisted driving buttons include cruise control button and auto U-turn buttons.

Left U-turn button | Cruise control button | Right U-turn button

⚠**Warning:**

1. After the assisted driving function is turned on, the machine will run automatically. Please remember how to exit assisted driving and ensure that the surrounding environment is safe before running.

2. After turning off the ultrasonic obstacle avoidance function, the assisted driving function will be disabled.

a) Cruise control

1. Short press the cruise control button, and the machine will automatically maintain its current posture and move forward in a straight line.

When activating the constant-speed straight-travel function, the steering joystick can be used in conjunction to adjust the direction of travel.

3. Except for the steering operation, triggering any other button or operating the joystick will exit the cruise control function.

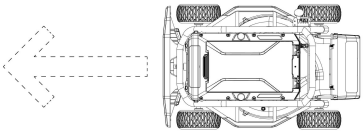

b) Auto U-turn

Short press the auto U-turn button, and the lawn mower will automatically complete the turn in the left or right direction. Triggering any other button or operating the joystick during the process will exit the auto U-turn.

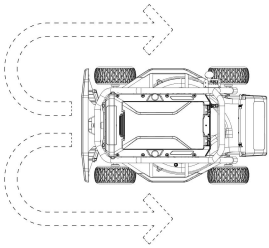

Display and operation of the touch screen

After connecting the machine correctly, the homepage of the remote control screen will display as follows:

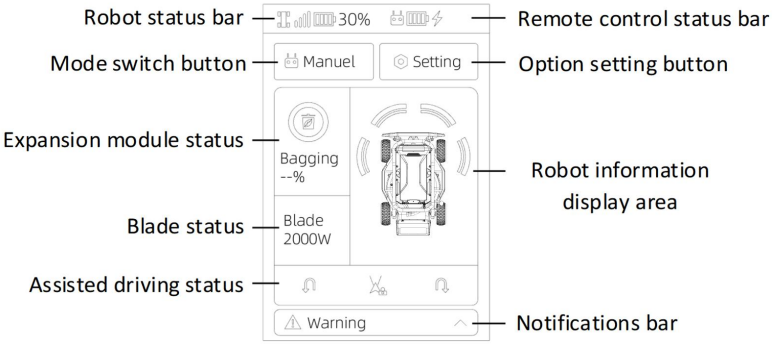

Robot status bar

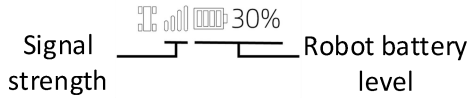

Remote control status bar

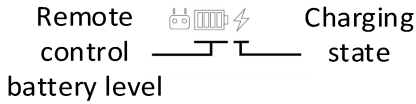

Robot information display area

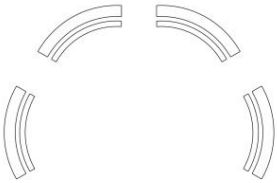

This icon displays yellow to indicate that the ultrasonic radar in the corresponding direction has detected an obstacle, and displays red to indicate that the obstacle is too close (less than 30cm).

Assisted driving status area

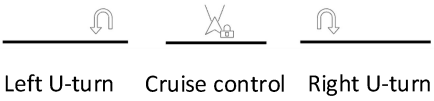

When the corresponding icon lights up, it indicates that the assisted driving task is being performed.

Blade status area

After starting the blade, the real-time power of the blade motor is displayed.

Expansion module status area

It can only be used after installing the auto-dumping bag. After installation, it can detect whether the grass-bag is full, and then control the opening and closing of the auto-dumping bag according to the prompts.

Notifications bar

When the robot triggers protection, errors/warnings, etc., it will be prompted here. Tap on the notification bar will expand it, allowing you to view detailed information, obtain operation tips, clear warning/error prompts, and other operations.

Settings page

Ultrasonic sensor switch: There are 4 ultrasonic sensors on the front left, front right, left and right sides of the robot for obstacle avoidance. When passing through narrow passages and other complex situations, you can choose to turn off the ultrasonic obstacle avoidance function. In order to comply with safety regulations, after turning off the ultrasonic sensor, the remote control distance is reduced to 20ft.(6m), and the assisted driving function is disabled.

Voice prompts: turn on and off the voice prompts.

Advanced:

Stability-enhancing mode switch: In the stability-enhancing mode, the main controller uses the IMU to provide body attitude measurement and superimpose the adjustment of the drive wheels to form a closed loop of body attitude control. This improves the stability of the vehicle body when resisting potholes and bumpy roads, allowing it to go straighter and turn more smoothly.

Bumper Sensor Switch: Bumper sensor switch: The bumper in front of the robot has a built-in collision sensor, and you can choose to turn off the collision detection function.

In order to comply with safety regulations, after turning off the ultrasonic sensor, the remote control distance is reduced to 20ft.(6m), and the assisted driving function is disabled.

Restore factory settings: Restore to factory settings, but the password will not be cleared.

Language: Select the language for the interactive interface.

Modify PIN code: Follow the prompts to modify the PIN code.

Pairing mode: When replacing the remote controller, you need to perform this step to pair the new remote controller with the robot. Please follow the prompts.

Joystick calibration: When there are problems such as the joystick not returning to the center or reaching the maximum value, you can perform this calibration of the joystick. Please follow the prompts to complete the joystick calibration.

Firmware version: Check the current firmware version of the remote control, robot, battery, etc.

Help and Feedback： Availability of Assistance and Provision of Feedback.

Mode switch button: Touch to switch the robot function mode, including manual lawn mowing and manual leaf suction modes. Manual leaf suction mode is only applicable to MOWRATOR centrifugal fan blades (need to be purchased separately). Manual mowing mode is available with other MOWRATOR mowing blades.

Charging operation

Just connect one end of the OTG cable to the USB type-C charging port on the remote control, and the other end to a charger with an output of 5V⎓ 1A. The OTG cable is supplied with the accessory . If the charging is successful, there will be a corresponding prompt on the display.

Note: Some dedicated chargers may not be able to charge the Mowrator remote control. Please use a more universal charger.

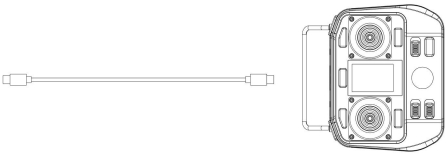

Troubleshooting

Fault name	possible reason	Solution
Unable to turn on	1.Battery is exhausted.	1.Charge.
Can't charge	1.Some dedicated chargers are not able to charge the Mowrator remote control. 2.USB cable is abnormal. 3.The charging port is abnormal or dirty. 4.The ambient temperature is too low <32℉(0°) or too high >104℉(40°).	1.Replace with a suitable charger for charging. 2.Replace USB cable and verify. 3.Clean the charging port and try again. 4.Try again at a suitable. ambient temperature.
The joystick does not rebound or return to center	1.The lever is stuck in gravel.	1.Clean the lever and dust-proof silicone.
The joystick has been returned to center, but the machine is still	1.The joystick needs calibration.	1.Calibrate the joystick in the settings. If the problem still exists after calibration, you need to contact after-sales

moving slowly		service.
The machine is not controlled by the remote control	1.Not connected to the machine. 2.The machine generates error warnings. 3.Signal too poor.	1.Follow the prompts to connect to the machine. 2.Check the notification bar for detailed information and operation tips. 3.Please move closer to the machine and try again.

Storage Guidelines

1. Please place items in a cool, dry place away from direct sunlight.
2. If it will not be used for a long time, please make sure to charge the battery to more than 70% before storing it.
3. Please keep items out of reach of children to avoid damage or accidents.
4. Do not place items in flammable and explosive environments, and keep away from corrosive substances and liquids.
5. Before using it again, please check whether each button is working properly before using it.

SteadyForce 56V 12&18Ah Battery

Safety Signs

Safety signs and their instructions deserve your careful attention and understanding.

The purpose of safety signs is to alert you to possible hazards.

Safety signs by themselves do not eliminate any hazard and cannot be used for accident prevention.

⚠**Warning：** Be sure to read and understand all safety instructions in this manual and always follow the safety instructions in this manual when operating, including paying attention to and understanding all safety symbols such as "DANGER," "WARNING," and "CAUTION" before using this tool. Failure to follow all instructions listed below may result in electric shock, fire, or serious personal injury.

Safety rules

⚠**Warning：**

1.To reduce the risk of electric shock, avoid contact with water or operate on damp surfaces. Do not throw the battery into water or fire. In case of accidental immersion, please stop using.

2.Avoid strong physical impacts, drops, crushing, puncturing, short-circuiting, and burning of the battery.

3.Refer to the user manual for proper usage and operation. Do not disassemble, repair, or modify it on your own.

4.Only use the charger with model number 600CG4810L for charging. If abnormalities like swelling or leakage occur, stop using or charging.

5.Avoid prolonged exposure of the battery to high temperatures >158℉(70°C).

6.Improper use may lead to explosions or fires. Do not short-circuit or overcharge.

7.Keep the battery away from children. Dispose of the battery according to environmental regulations when needed.

8.For storage exceeding 3 months, keep the battery in an environment of 32-95℉(0-35°C). For storage under 1 month, it can be stored in an environment of -4-113℉(-20-45°C).

9.Hot swapping is not allowed. Plug in the connector before powering on and power off before unplugging.

10.Keep the wiring terminals dry and clean, avoiding dirt or water droplets, which may cause a short circuit or poor contact.

11.Discontinue use if the battery shows signs of swelling, leakage, damage, or severe deformation.

12.During usage, beware of and stay away from explosive gases, flames, and fireworks.

13.Connecting metal objects between the positive and negative terminals of the battery pack will short-circuit it. Avoid placing the battery pack near anything that may cause a short circuit, such as paper clips, coins, keys, screws, nails, and other metal objects.

14.Prohibited for use on products other than Mowrator to avoid unknown risks and issues.

15. Prevent the battery from overheating, overloading, overcharging, and excessive discharge.

16. The battery undergoes a natural aging process. Replace the battery pack no later than when its capacity drops to 80% of the new battery pack capacity. A weakened battery in an aging battery pack can no longer meet the high power requirements for the cordless lawnmower to operate normally, posing a safety risk.

Product Overview

This battery is designed for compatibility with MOWRATOR products and is crafted with lithium iron phosphate cells, ensuring safety and reliability. Please read this manual carefully to understand how to operate and maintain your product properly, preventing unnecessary losses. For the latest information on MOWRATOR, you can visit the website https://www.mowrator.com. In case of the need for repairs, parts replacement, or other services, please contact an authorized service provider and provide the product's model and serial number located on the front label sticker of the battery.

Product Specifications

Parameter	Content	
Name	Mowrator SteadyForce 56V 12Ah Battery	Mowrator SteadyForce 56V 18Ah Battery
Battery Model	ZMBPL5112G1	ZMBPL5118G1
Weight	16 lb	21 lb
Size	14.1 x 9.9 x 4.2 in	
Operating Temperature	32℉~104℉（0°C~40°C）	
Charging Temperature	32℉~113℉（0°C~45°C）	
Rated Voltage	51.2V	
Output (Voltage, Power)	44.8V~ 58.4V⎓	
Capacity	12Ah	18Ah
Energy	614.4Wh	921.6Wh
Limited charge voltage	58.4 V	
Maximum continuous charging current	12 A	18 A
Maximum continuous discharge current	36 A	54 A
Charging time length	70min	90min
	With Mowrator 600W Supercharger，Model 600CG4810L	
Battery life	1.5h	2.25h
	With Mowrator S1 series	

Single battery mowing area	3000 ㎡ (0.75 ac)	4500 ㎡ (1.125 ac)
	With Mowrator S1 series	
Battery type	Lithium iron phosphate	
Number of charge cycles	1500	
BMS protection	Charging over temperature, discharging over temperature, excessive total voltage, insufficient total voltage, excessive individual voltage, insufficient individual voltage, individual imbalance, overcurrent, short circuit, communication anomaly protection	
OTA	support	

Product Introduction

The names and functions of each component are illustrated in the diagram:

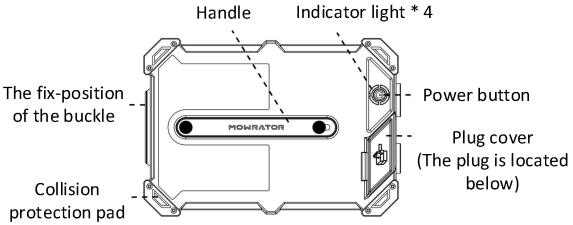

Checking Battery Level

Short press the power button to check the battery level. After a short press, the four indicator lights will display the current battery level. The lights will turn off after 5 seconds.

Indicator Light Sequence

Indicator Light Battery Levels:

Battery level	**1# light**	**2# light**	**3# light**	**4# light**
0~12.5%	Blinking	Off	Off	Off
12.5%~25%	Solid	Off	Off	Off
25%~37.5%	Solid	Blinking	Off	Off

37.5%~50%	Solid	Solid	Off	Off
50%~62.5%	Solid	Solid	Blinking	Off
62.5%~75%	Solid	Solid	Solid	Off
75%~87.5%	Solid	Solid	Solid	Blinking
87.5%~100%	Solid	Solid	Solid	Solid

Battery Power On/Off

Power On:

Long press the power button to turn on the battery. During the long-press, indicator lights 1, 2, 3 and 4 will sequentially illuminate. Continue holding until all four indicator lights are fully lit, then release the button. The battery is now powered on, and the indicator lights display the current battery level.

⚠**Note:** If you release the button before all four lights are fully lit, the power-on process will be aborted, and the lights will turn off.

Power Off:

Long press the power button after the battery is powered on to initiate the shutdown process. During the long-press, indicator lights 4, 3, 2, and 1 will sequentially turn off.Continue holding until all four indicator lights are fully extinguished, then release the button.The battery is now powered off.

Charging Operation

Connect one end of the charger to the 100-220Vac power outlet and the other end to the battery port to complete the charging process.

⚠**Note:** Please use the dedicated charger provided for charging. Do not use any other charger for this purpose.

Charger Indicator Lights Applicable to 600CG4810L：

Indicator Lights	Meaning	Actions
Blinking Green	Charging in progress	—
Solid Green	Charging complete	—
Solid Yellow	Standby mode	Battery can be inserted for charging
Solid Red	Battery or charger overheating	Resume usage after the battery or charger returns to normal temperature
Blinking Red	Internal error in the	Please restart or contact customer support

	battery or charger	

Troubleshooting

Issue	Possible Causes	Troubleshooting
Battery Cannot Power On	Battery is completely drained.	Recharge the battery before use.
Unable to charge	1.Charger malfunction. 2.Plug not properly inserted. 3.Dirt between plugs.	1.Check if the charger is damaged. 2.Ensure the plug is securely inserted. 3.Clean the plugs.
Mower Unable to Start	1.Power cable not properly connected. 2.Battery is depleted.	1.Ensure proper connection of the power cable. 2.Charge the battery
Automatic Shutdown After Running for a While	Communication failure between the battery and the mower.	Clean the small hole in the battery interface and check for dirt affecting contact.
Battery Auto Shutdown	1.Battery is completely drained. 2.Battery overheating<-4℉ (-20°C) or >140℉ (60°C). 3.Short circuit or overcurrent.	1.Recharge the battery 2.Allow the battery to return to a normal temperature before retrying. 3.Check for water or dirt in the battery interface.

Storage Guidelines

1.For storage periods exceeding 3 months, keep the battery in an environment with temperatures between 32-95℉ (0-35°C); for storage less than 1 month, it can be stored in an environment between -4-113℉ (-20-45°C).

2.Keep the battery interface dry and clean, avoiding the entry of conductive objects or liquids that may cause a short circuit.

3.Store away from flammable or explosive gases and avoid high-temperature and high-humidity environments.

4.Store in a location inaccessible to children.

Warranty Guide

After-sales policy coverage

1. During the warranty period, the damage caused by performance failure.

Non-after-sales policy coverage

This policy does not cover the following situations:

1. Damage caused by improper use, maintenance or failure to comply with the product user manual;
2. Collision and burning accidents caused by man-made problems other than the quality of the product itself;
3. Damage caused by unauthorized modification, disassembly, shell opening, etc. not guided by official instructions;
4. Damage caused by incorrect installation, use and operation without following the instruction manual;
5. Damage caused by customers repairing and installing parts on their own without official instructions and guidance;
6. Damage caused by operation in harsh environments, such as strong wind, rain, sand and dust, etc..

Disclaimers and Warnings

This product is not a toy and is not suitable for use by persons under the age of 18. Please do not let children come into contact with this product. Please be particularly careful when operating in scenes where children are present.

This product is a multi-functional lawn mower that will provide an efficient, intelligent and stable lawn mowing experience when the power supply is working normally and the components are not damaged. Visit https://www.mowrator.com for the latest User Manual. Shenzhen Zongguan Innovation Co., Ltd. (MOWRATOR) reserves the right to update this User Manual.

Please be sure to read the entire User Manual carefully before using this product, and operate it only after you are familiar with the functions of the product. If you do not operate this product correctly, you may cause serious harm to yourself or others, or cause damage to the product and property. This product is relatively complex and requires a period of familiarity

before it can be used safely, and some basic common sense is required before operation. Without a strong sense of safety, improper operation may result in product damage and property loss, or even serious injury to yourself and others. Never use parts not provided and recommended by MOWRATOR. You must install and use the product in accordance with MOWRATOR's instructions. Before assembly, setup and use, be sure to visit the MOWRATOR official website (https://www.mowrator.com) to download the "User Manual" and carefully read all instructions and warnings in the document.

Once you use this product, you are deemed to have understood, recognized and accepted all the terms and contents of this document. Users promise to be responsible for their own actions and all consequences arising therefrom. The user promises to use this product only for legitimate purposes and agrees to all terms and content of this document and any relevant policies or guidelines that MOWRATOR may formulate.

MOWRATOR is not responsible for any losses caused by the user's failure to use the product in accordance with this document and the "User Manual".

Subject to compliance with laws and regulations, MOWRATOR has the final right to interpret this document. MOWRATOR reserves the right to update, revise or terminate these Terms without prior notice.

The documentation for this product is subject to update without prior notice. Please visit the official website https://www.mowrator.com and enter the product page for the latest information.

MOWRATOR will not be responsible for the following situations:

1. Accidents caused by use of products by persons under 18 years of age;
2. Accidents caused by failure to use the product correctly and reasonably according to the usage instructions guided by the official instructions (including but not limited to the safety rules therein);
3. Accidents caused by using Mowrtaor products that are not sold through Mowrtaor’s official sales channels or that are not properly maintained or maintained;
4. If the service provider officially designated by Mowrator is not operated according to the plan approved by Mowrator, the user can modify, disassemble, and open the shell of Mowrtaor products (including but not limited to mechanical parts, circuit batteries or electronic components, and external accessories) by themselves or by entrusting other parties to do so. Part), and then an accident occurs during the process or causes subsequent Mowrtaor products to fail to function normally or cause accidents during use;

5. If the service provider officially designated by Mowrator is not operated according to the solution approved by Mowrator, the user himself or entrusts other parties to repair, replace parts or install third-party parts certified by Mowrator, which may cause accidents in the process or cause subsequent Mowrtaor products to malfunction. An accident occurs during use or use;

6. Wear, collision, falling, fire, water immersion, chemical corrosion, electromagnetic shock and other factors that are not caused by quality problems of Mowrtaor products themselves cause Mowrtaor products to fail to function normally or cause accidents.

Additional instructions

While using the Mowrator App, carefully read all safety tips, warnings, and disclaimers that pop up. Be sure to understand the relevant local laws and regulations. Mowrator is not responsible for any of your usage. Before using the Mowrator App, you must agree to the Mowrator App Terms of Use and the ZGI Privacy Policy. These Terms of Use and Privacy Policy limit some of Mowrator's legal liabilities, please read them carefully within the app.

Mowrator and its affiliates, suppliers, resellers or service providers will not assume any liability for is not responsible, even if advised of the possibility of their occurrence:

1) A third party files a damage claim against you;

2) Your data is lost, damaged or leaked;

3) Special, incidental, indirect or consequential damages, including but not limited to loss of profits, business revenue, goodwill or anticipated savings.

The total liability of Mowrator and its affiliates, suppliers, resellers or service providers regardless of the cause of the damage shall be limited to the actual direct losses suffered by you, which shall not exceed the amount paid by you to purchase the product.

FCC Statement

Warning: Changes or modifications to this unit not expressly approved by the party responsible for compliance could void the user’s authority to operate the equipment.

Note: This equipment has been tested and found to comply with the limits for a Class B digital device, pursuant to Part 15 of the FCC Rules. These limits are designed to provide reasonable protection against harmful interference in a residential installation. This equipment generates, uses and can radiate radio frequency energy and, if not installed and used in accordance with the instructions, may cause harmful interference to radio communications.

However, there is no guarantee that interference will not occur in a particular installation. If this equipment does cause harmful interference to radio or television reception, which can be determined by turning the equipment off and on, the user is encouraged to try to correct the interference by one or more of the following measures:

- Reorient or relocate the receiving antenna.
- Increase the separation between the equipment and receiver.
- Connect the equipment into an outlet on a circuit different from that to which the receiver is connected.
- Consult the dealer or an experienced radio/TV technician for help

The device must not be co-located or operating in conjunction with any other antenna or transmitter.

FCC RF Radiation Exposure Statement Caution:

To maintain compliance with the FCC's RF exposure guidelines, Smart lawn mowers shall place the product at least 20cm from nearby persons.

Mowrator remote control is a radio transmitter and receiver intended to be worn on your wrist. It is designed not to exceed the limits for exposure to radio waves (radio frequency electromagnetic fields) adopted by the Federal Communications Commission (FCC).