Test Report
23-1-0143001T001a-C01

Number of pages:	34	**Date of Report:**	2024-Apr-12
Testing company:	cetecom advanced GmbH Untertuerkheimer Str. 6-10 66117 Saarbruecken GERMANY	**Applicant:**	Gameproofer Oy
Product: **Model:**	**Smart sensor** **DGT4G**		
FCC ID:	2BE7W-DGT4G	**IC:**	32115-DGT4G
Testing has been carried out in accordance with:	**FCC Regulations** **Title 47 CFR, Chapter I, Subchapter A, Part 15** **Subpart C Intentional Radiators** § 15.247 Operation within the bands 902-928 MHz, 2400-2483.5 MHz, and 5725-5850 MHz **ISED-Regulations** **Radio Standards Specification** **RSS-Gen, Issue 5** General Requirements for Compliance of Radio Apparatus **RSS-247, Issue 3** Digital Transmission Systems (DTSs), Frequency Hopping Systems (FHSs) and Licence-Exempt Local Area Network (LE-LAN) Device		
Tested Technology:	BLE		
Test Results:	**☒ The EUT complies with the requirements in respect of selected parameters subject to the test.** The test results relate only to devices specified in this document The current version of “Test Report 23-1-0143001T001a-C01” replaces the “Test Report 23-1-0143001T001a” dated 2024-Apr-09. The replaced test report is herewith invalid.		
Signatures:			

B.Eng. Martin Nunier	Timo Franke
Supervisor Radio Services	Testing Manager
Authorization of test report	Responsible of test report

Table of Contents

Table of Annex 3
1 General information 4
1.1 Disclaimer and Notes 4
1.2 Attestation 4
1.3 Summary of Test Results 5
1.4 Summary of Test Methods 6
2 Administrative Data 7
2.1 Identification of the Testing Laboratory 7
2.2 General limits for environmental conditions 7
2.3 Test Laboratories sub-contracted 7
2.4 Organizational Items 7
2.5 Applicant's details 7
2.6 Manufacturer's details 7
2.7 Equipment under Test (EUT) 8
2.8 Untested Variant (VAR) 8
2.9 Auxiliary Equipment (AE) 8
2.10 Connected cables (CAB) 8
2.11 Software (SW) 8
2.12 EUT set-ups 8
2.13 EUT operation modes 8
3 Equipment under test (EUT) 9
3.1 General Data of Main EUT as Declared by Applicant 9
3.2 Detailed Technical data of Main EUT as Declared by Applicant 9
3.3 Modifications on Test sample 9
4 Measurements 10
4.1 Duty-Cycle 10
4.2 Peak output power (Sweep) 11
4.3 Power spectral density 13
4.4 Minimum Emission Bandwidth 6 dB 15
4.5 Occupied Channel Bandwidth 99% 16
4.6 Emissions in non-restricted frequency bands 17
4.7 Radiated field strength emissions below 30 MHz 19
4.8 Radiated field strength emissions 30 MHz – 1 GHz 23
4.9 Radiated field strength emissions above 1 GHz 25
4.10 Radiated Band-Edge emissions 28
4.11 Equipment lists 30
5 Results from external laboratory 32

6 Opinions and interpretations 32
7 List of abbreviations 32
8 Measurement Uncertainty valid for conducted/radiated measurements 33
9 Versions of test reports (change history) 34

Table of Annex			
Annex No.	**Contents**	**Reference Description**	**Total Pages**
Annex 1	Test result diagrams	**TR23-1-0143001T001a-A1**	69
Annex 2	Internal photographs of EUT	**Provided by applicant**	-
Annex 3	External photographs of EUT	**TR23-1-0143001T001a-A3**	4
Annex 4	Test set-up photographs	**TR23-1-0143001T001a-A4**	6
The listed attachments are separate documents.			

1 General information

1.1 Disclaimer and Notes

The test results of this test report relate exclusively to the test item specified in this test report as specified in chapter 2.7. cetecom advanced does not assume responsibility for any conclusions and generalizations drawn from the test results with regard to other specimens or samples of the type of the equipment represented by the test item.
The test report may only be reproduced or published in full. Reproduction or publication of extracts from the report requires the prior written approval of cetecom advanced.
The testing service provided by cetecom advanced has been rendered under the current "General Terms and Conditions for cetecom advanced".
cetecom advanced will not be liable for any loss or damage resulting from false, inaccurate, inappropriate or incomplete product information provided by the customer.
Under no circumstances does the cetecom advanced test report include any endorsement or warranty regarding the functionality, quality or performance of any other product or service provided.
Under no circumstances does the cetecom advanced test report include or imply any product or service warranties from cetecom advanced, including, without limitation, any implied warranties of merchantability, fitness for purpose, or non-infringement, all of which are expressly disclaimed by cetecom advanced.
All rights and remedies regarding vendor's products and services for which cetecom advanced has prepared this test report shall be provided by the party offering such products or services and not by cetecom advanced.
In no case this test report can be considered as a Letter of Approval.

This test report is electronically signed and valid without handwritten signature. For verification of the electronic signatures, the public keys can be requested at the testing laboratory.

The test report must always be reproduced in full; reproduction of an excerpt only is subject to written approval of the testing laboratory. The documentation of the testing performed on the tested devices is archived for 10 years at cetecom advanced.

Also we refer on special conditions which the applicant should fulfill according §2.927 to §2.948, special focus regarding modification of the equipment and availability of sample equipment for market surveillance tests.

1.2 Attestation

I declare that all measurements were performed by me or under my supervision and that all measurements have been performed and are correct to my best knowledge and belief to Industry Canada standards. All of the above requirements are met in accordance with enumerated standards.

1.3 Summary of Test Results

The EUT integrates a BLE transmitter. Other implemented wireless technologies were not considered within this test report.

Test case	Reference Clause FCC ☒	Reference Clause ISED ☒	Page	Remark	Result
Duty-Cycle	§15.35(c)	RSS-Gen Issue 5, §8.2	10	--	PASSED
Minimum Emission Bandwidth 6 dB	§15.247 5.2(a)	RSS-247, Issue 3, §5.2(a) RSS-Gen Issue 5,: §6.7	15	--	PASSED
Occupied Channel Bandwidth 99%	2.1049(h)	RSS-Gen Issue 5, §6.7	16	--	PASSED
Peak output power (Sweep)	§15.247(b)(3)	RSS-247, Issue 3, §5.4(d)	12	--	PASSED
Transmitter Peak output power radiated	§15.247(b)(4)(c)(i)	RSS-247, Issue 3, §5.4(d)	--	--	N/A
Emissions in non-restricted frequency bands	§15.247(d)	RSS-247, Issue 3, §5.5	18	--	PASSED
Radiated Band-Edge emissions	§15.205(b) §15.247(d)	RSS-Gen: Issue 5 §8.9, §8.10 RSS-247, Issue 3, §5.5	29	--	PASSED
Power spectral density	§15.247(e)	RSS-247, Issue 3, §5.2(b)	14	--	PASSED
Radiated field strength emissions below 30 MHz	§15.205(a) §15.209(a)	RSS-Gen: Issue 5 §8.9 Table 6	22	--	PASSED
Radiated field strength emissions 30 MHz – 1 GHz	§15.209 §15.247(d)	RSS-Gen: Issue 5 §8.9 Table 5 RSS-247, Issue 3, §5.5	24	--	PASSED
Radiated field strength emissions above 1 GHz	§15.209(a) §15.247(d)	RSS-Gen: Issue 5: §8.9 Table 5+7 RSS-247, Issue 3, §5.5	27	--	PASSED
AC-Power Lines Conducted Emissions	§15.207	RSS-Gen Issue 5: §8.8 Table 4	--	--	N/A

PASSED	The EUT complies with the essential requirements in the standard.
FAILED	The EUT does not comply with the essential requirements in the standard.
N/A	Test case does not apply to the test object.
NP	The test was not performed by the cetecom advanced laboratory.

Decision Rule: cetecom advanced GmbH follows ILAC G8:2019 chapter 4.2.1 (Simple Acceptance Rule).

1.4 Summary of Test Methods

Test case	Test method
Duty-Cycle	ANSI C63.10:2013, §11.6(b)
Minimum Emission Bandwidth 6 dB	ANSI C63.10:2013, §6.9.2, §11.8
Occupied Channel Bandwidth 99%	ANSI C63.10:2013, §6.9.3
Peak output power (Sweep)	ANSI C63.10:2013, §11.9
Power spectral density	ANSI C63.10:2013, §11.10
Emissions in non-restricted frequency bands	ANSI C63.10:2013, §11.11, §6.10.5
Radiated Band-Edge emissions	ANSI C63.10-2013; “Marker-Delta method”, §6.10.5, §11.13
Transmitter Peak output power radiated	Result calculated with measured conducted RF-power value and stated/measured antenna gain for band of interest
Radiated field strength emissions below 30 MHz	ANSI C63.10-2013 §6.3, §6.4
Radiated field strength emissions 30 MHz- 1 GHz	ANSI C63.4-2014 §8.2.3, ANSI C63.10-2013 §6.3, §6.5
Radiated field strength emissions above 1 GHz	ANSI C63.4-2014 §8.3, ANSI C63.10-2013 §6.3, §6.6
AC-Power Lines Conducted Emissions	ANSI C63.4-2014 §7, ANSI C63.10-2013 §6.2

And reference also to Test methods in KDB558074

2 Administrative Data

2.1 Identification of the Testing Laboratory

Company name:	cetecom advanced GmbH
Address:	Untertuerkheimer Str. 6-10 66117 Saarbruecken Germany
Responsible for testing laboratory:	Dipl.-Ing. (FH) Andreas Luckenbill M.Sc.
Accreditation scope:	**DAkkS Webpage: FCC ISED**
IC Lab company No. / CAB ID:	3462D / DE0001
Test location 1:	Im Teelbruch 116; 45219 Essen
Test location 2:	--

2.2 General limits for environmental conditions

Temperature:	22±2 °C
Relative. humidity:	45±15% rH

2.3 Test Laboratories sub-contracted

Company name:	--

2.4 Organizational Items

Responsible testing manager:	Timo Franke
Receipt of EUT:	2024-Feb-07
Date(s) of test:	2024-Feb-19 to 2024-Mar-08
Version of template:	24.0301

2.5 Applicant's details

Applicant's name:	Gameproofer Oy
Address:	Visiokatu 4 33720 Tampere Finland
Contact Person:	Timo Porttila
Contact Person's Email:	timo.porttila@gameproofer.com

2.6 Manufacturer's details

Manufacturer's name:	Gameproofer Oy
Address:	Visiokatu 4 33720 Tampere Finland

2.7 Equipment under Test (EUT)

EUT No.*)	Sample No.	Product	Model	Type	SN	HW	SW
EUT 1	23-1-01430S07_C01	Smart sensor	DGT4G	-	N/A	1.0	1.0
EUT 2	23-1-01430S08_C01	Smart sensor	DGT4G	-	N/A	1.0	1.0
EUT 3	23-1-01430S09_C01	Smart sensor	DGT4G	-	N/A	1.0	1.0

*) EUT short description is used to simplify the identification of the EUT in this test report.

2.8 Untested Variant (VAR)

VAR No.*)	Sample No.	Product	Model	Type	SN	HW	SW

*) The listed additional untested model variant(s) (VAR) is/are not object of evaluation of compliance. For further information please see Annex 5: Declaration of applicant of model differences.
If the table above does not show any other line than the headline, no untested variants are available.

2.9 Auxiliary Equipment (AE)

AE No.*)	Sample No.	Auxiliary Equipment	Model	SN	HW	SW

*) AE short description is used to simplify the identification of the auxiliary equipment in this test report. If the table above does not show any other line than the headline, no AE was used during testing nor was taken into account for evaluation

2.10 Connected cables (CAB)

CAB No.*)	Sample No.	Cable Type	Connectors / Details	Length

*) CAB short description is used to simplify the identification of the connected cables in this test report. If the table above does not show any other line than the headline, no cable was used during testing nor was taken into account for evaluation

2.11 Software (SW)

SW No.*)	Sample No.	SW Name	Description	SW Status

*) SW short description is used to simplify the identification of the used software in this test report. If the table above does not show any other line than the headline, no SW was used during testing nor was taken into account for evaluation.

2.12 EUT set-ups

set-up no.*)	Combination of EUT and AE	Description
1	EUT 2 (EUT 3)	Used for radiated measurements. EUT 2 and EUT 3 are identical and just switched to charge other EUTs internal battery.
2	EUT 1	Used for conducted measurements

*) EUT set-up no. is used to simplify the identification of the EUT set-up in this test report.

2.13 EUT operation modes

EUT operating mode no.*)	Operating modes	Additional information
op. 1	BLE_TX-Mode	With help of special test firmware TX-mode GFSK 1 Mbps was set-up. We refer to applicants information/papers for details about necessary commands.
op. 2	BLE_TX-Mode	With help of special test firmware TX-mode GFSK 2 Mbps was set-up. We refer to applicants information/papers for details about necessary commands.
op. 3	BLE_RX-Mode	With help of special test firmware RX-mode was set-up. We refer to applicants information/papers for details about necessary commands.

*) EUT operating mode no. is used to simplify the test report.

3 Equipment under test (EUT)

3.1 General Data of Main EUT as Declared by Applicant

Firmware	☐ for normal use	☒ Special version for test execution	
Power supply	☐ AC Mains	-	
	☒ DC Mains [1)]	**3.7** V DC via **banana** Connector	
	☒ Battery	Lithium polymer battery (Highdrive 251330)	
Operational conditions	T_{nom} = 21 °C	T_{min} = n/a °C	T_{max} = n/a °C
EUT sample type	**Engineering Samples**		
Weight	kg		
Size [LxWxH]	4 cm x 4 cm x 4 cm		
Interfaces/Ports	-		
For further details refer Applicants Declaration & following technical documents **1) DC-Mains only used for conducted tests. EUT standart is an internal battery.**			
For further details regarding radio parameters, please refer to Bluetooth Core Specification			

3.2 Detailed Technical data of Main EUT as Declared by Applicant

Frequency Band	2.4 GHz ISM Band (2400 MHz - 2483.5 MHz)	
Number of Channels (USA/Canada -bands)	40 (37 Hopping + 3 Advertising)	
Nominal Channel Bandwidth	1 MHz	
Type of Modulation | Data Rate	☒ GFSK | 1 Mbit/s	☒ GFSK | 2 Mbit/s
	☐ GFSK | 500 kbit/s	☐ GFSK | 125 kbit/s
Other wireless options	☐ a/n/ac mode ☐ b/g/n mode ☐ Bluetooth EDR (not tested within this report) ☐ Cellular transceiver (2G/3G/4G/5G/GPS, not tested in this report) ☒ GNSS	
Max. Conducted Output Power	GFSK **-4** dBm (measured)	
EIRP Power (Calculated EIRP)	GFSK **-4** dBm + **0.74** dBi = **-3.26** dBm	
Antenna Type	PCB-Antenna	
Antenna Gain	0.74 dBi	
FCC label attached	No	
Test firmware / software and storage location	EUT	
For further details refer Applicants Declaration & following technical documents		

Description of Reference Document (supplied by applicant)	Version	Total Pages
--	--	--

3.3 Modifications on Test sample

Additions/deviations or exclusions	--

4 Measurements

4.1 Duty-Cycle

Testing method:

The measurement is made according to relevant reference clauses:
(See Tables *Summary of Test Results* and *Summary of Test Methods* on page 5)

The necessary duty-cycle correction factor is determined on nominal conditions on middle channel only. It is assumed that no noticeable changes occur when tested on other channels or climatic conditions.

EUT settings
The EUT was instructed to send with maximum power (if adjustable) according applicants instructions.
Different modulation characteristics have been checked, e.g. data rates which EUT can operate.

A special firmware program is used for test purposes. In opposite to normal operating mode a higher duty-cycle is set in order to facilitate the measurements. This is maximized at the extent possible.

The necessary duty-cycle correction factor is determined on nominal conditions on one channel in each operable frequency-band. It is assumed that no noticeable changes occur when tested on other channels or climatic conditions. The Duty-Cycle was constant, means without variations.

Formula to calculate Duty-Cycle:

Duty cycle calculations: $x = {TX_{ON}}/{(TX_{ON} + TX_{OFF})}$	Duty cycle factor: DC=	Regarding power: $10 * log({1}/{x})$ dB
		Regarding field strength: $20 * log({1}/{x})$ dB

☒ The results were corrected in order to evaluate for worst-case result each time when average values are necessary for example average radiated emissions or similar
☐ No correction necessary: Duty-Cycle > 98%

4.1.1 Measurement Location

Test site	120910 - Radio Laboratory 1 (TS 8997)

4.1.2 Result

Duty-Cycle [%]	Duty-Cycle correction Power [dB]	Duty-Cycle correction Field Strength [dB]
63.3	1.99	3.97
33.5	4.75	9.5

4.2 Peak output power (Sweep)

4.2.1 Description of the general test setup and methodology, see below example:

The EUT's RF-signal is coupled out by a suitable antenna coupling connector (1). The signal is first attenuated (2) then connected to power meter (3) or spectrum-analyzer (4) for RF-conducted measurements. The specific attenuation loss is determined prior to the measurement within a set-up attenuation measurement. These are then taken into account by correcting the measurement readings.

Schematic:

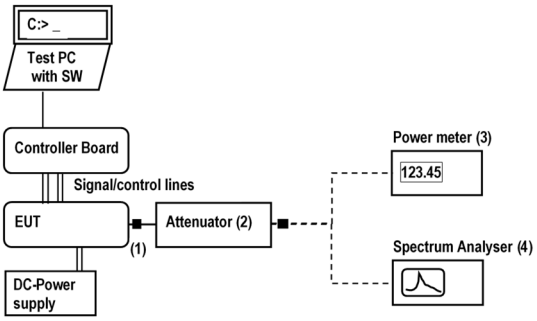

Testing method:

The measurement is made according to relevant reference clauses:
(See Tables *Summary of Test Results* and *Summary of Test Methods* on page 5)

Measurement is made using Rohde & Schwarz TS8997 test system.

Test method	Maximum peak conducted output power(RBW = DTS-bandwidth of the signal)
Remarks	--

The measurement was performed in non-hopping transmission mode with the carrier set to lowest/middle and highest channel.

EUT settings
The EUT was instructed to send with maximum power (if adjustable) according applicants instructions.
Different modulation characteristics have been checked, e.g. data rates which EUT can operate

4.2.2 Measurement Location

Test site	120910 - Radio Laboratory 1 (TS 8997)

4.2.3 Limit

Frequency Range [MHz]	Limit [W]	Limit [dBm]	Detector	RBW / VBW [MHz]
2400 - 2483.5	**1**	**30**	**MaxPeak**	**3 / 10**

4.2.4 Result

Mode	DUT Frequency (MHz)	Peak Power (dBm)	Limit Max (dBm)	Result
BT-5 [1Mbps]; 2402MHz	2402.000000	-4.5	30.0	PASS
BT-5 [1Mbps]; 2440MHz	2440.000000	-4.3	30.0	PASS
BT-5 [1Mbps]; 2480MHz	2480.000000	-4.0	30.0	PASS
BT-5 [2Mbps]; 2402MHz	2402.000000	-4.5	30.0	PASS
BT-5 [2Mbps]; 2440MHz	2440.000000	-4.3	30.0	PASS
BT-5 [2Mbps]; 2480MHz	2480.000000	-4.0	30.0	PASS

Remark: for more information and graphical plot see annex A1 **TR23-1-0143001T001a-A1**

4.3 Power spectral density

4.3.1 Description of the general test setup and methodology, see below example:

The EUT's RF-signal is coupled out by a suitable antenna coupling connector (1). The signal is first attenuated (2) then connected to spectrum-analyzer (4) for RF-conducted measurements. The specific attenuation loss is determined prior to the measurement within a set-up attenuation measurement. These are then taken into account by correcting the measurement readings of the spectrum-analyzer.

Schematic:

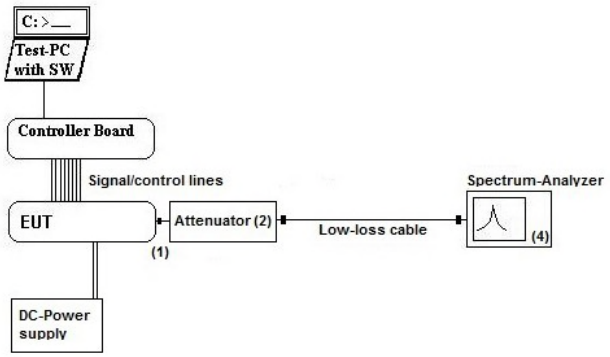

Testing method:

The measurement is made according to relevant reference clauses:
(See Tables *Summary of Test Results* and *Summary of Test Methods* on page 5)

Measurement is made using Rohde & Schwarz TS8997 test system.

Test method	PKPSD-Method
Remarks	--

EUT settings
The EUT was instructed to send with maximum power (if adjustable) according applicants instructions.

4.3.2 Measurement Location

Test site	120910 - Radio Laboratory 1 (TS 8997)

4.3.3 Limit

Limit [dBm] @ 3 kHz	Detector [MaxHold]	RBW / VBW [kHz]
≤ 8	**Peak**	**3 / 10**

4.3.4 Result

Mode	DUT Frequency	Frequency (MHz)	PSD (dBm)	Limit Max (dBm)	Result
BT-5 [1Mbps]; 2402MHz	2402.000000	2401.977425	-14.500	8.0	PASS
BT-5 [1Mbps]; 2440MHz	2440.000000	2439.977425	-14.376	8.0	PASS
BT-5 [1Mbps]; 2480MHz	2480.000000	2479.826923	-14.062	8.0	PASS
BT-5 [2Mbps]; 2402MHz	2402.000000	2402.012521	-14.856	8.0	PASS
BT-5 [2Mbps]; 2440MHz	2440.000000	2440.012521	-14.586	8.0	PASS
BT-5 [2Mbps]; 2480MHz	2480.000000	2480.012521	-14.357	8.0	PASS

Remark: for more information and graphical plot see annex A1 **TR23-1-0143001T001a-A1**

4.4 Minimum Emission Bandwidth 6 dB

4.4.1 Description of the general test setup and methodology, see below example:

The EUT's RF-signal is coupled out by a suitable antenna coupling connector (1). The signal is first attenuated (2) then connected to spectrum-analyzer (4) for RF-conducted measurements. The specific attenuation loss is determined prior to the measurement within a set-up attenuation measurement. These are then taken into account by correcting the measurement readings of the spectrum-analyzer.

Schematic:

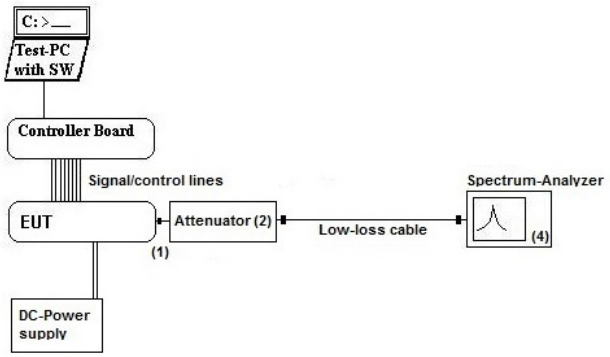

Testing method:

The measurement is made according to relevant reference clauses:
(See Tables *Summary of Test Results* and *Summary of Test Methods* on page 5)

Measurement is made using Rohde & Schwarz TS8997 test system.

4.4.2 Measurement Location

Test site	120910 - Radio Laboratory 1 (TS 8997)

4.4.3 Limit

Limit [kHz]	Detector [MaxHold]	RBW / VBW [kHz]
≥ 500	**MaxPeak**	**100 / 300**

4.4.4 Result

Mode	DUT Frequency	Bandwidth (MHz)	Limit Min	Limit Max	Band Edge Left	Band Edge Right
BT-5 [1Mbps]; 2402MHz	2402.000000	0.740000	0.500000	---	2401.640000	2402.380000
BT-5 [1Mbps]; 2440MHz	2440.000000	0.740000	0.500000	---	2439.640000	2440.380000
BT-5 [1Mbps]; 2480MHz	2480.000000	0.760000	0.500000	---	2479.620000	2480.380000
BT-5 [2Mbps]; 2402MHz	2402.000000	1.240000	0.500000	---	2401.400000	2402.640000
BT-5 [2Mbps]; 2440MHz	2440.000000	1.240000	0.500000	---	2439.400000	2440.640000
BT-5 [2Mbps]; 2480MHz	2480.000000	1.240000	0.500000	---	2479.400000	2480.640000

Remark: for more information and graphical plot see annex A1 **TR23-1-0143001T001a-A1**

4.5 Occupied Channel Bandwidth 99%

4.5.1 Description of the general test setup and methodology, see below example:

The EUT's RF-signal is coupled out by a suitable antenna coupling connector (1). The signal is first attenuated (2) then connected to spectrum-analyzer (4) for RF-conducted measurements. The specific attenuation loss is determined prior to the measurement within a set-up attenuation measurement. These are then taken into account by correcting the measurement readings of the spectrum-analyzer.

Schematic:

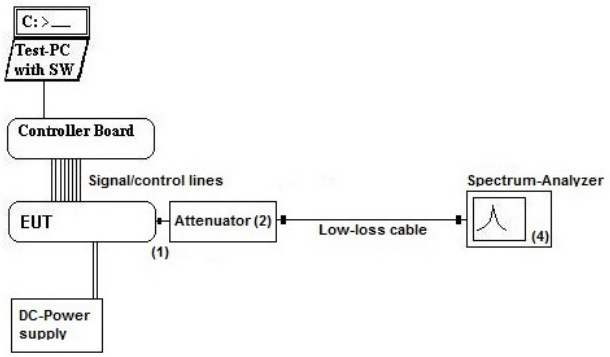

Testing method:

The measurement is made according to relevant reference clauses:
(See Tables *Summary of Test Results* and *Summary of Test Methods* on page 5)

Measurement is made using Rohde & Schwarz TS8997 test system.

4.5.2 Measurement Location

Test site	120910 - Radio Laboratory 1 (TS 8997)

4.5.3 Limit

When the occupied bandwidth limit is not stated in the applicable reference measurement method, the transmitted signal bandwidth shall be reported as the 99% emission bandwidth, as calculated or measured.

4.5.4 Result

Mode	DUT Frequency	Bandwidth (MHz)	Limit Min	Limit Max	Band Edge Left	Band Edge Right
BT-5 [1Mbps]; 2402MHz	2402.000000	1.052631	---	---	2401.496241	2402.548872
BT-5 [1Mbps]; 2440MHz	2440.000000	1.052631	---	---	2439.496241	2440.548872
BT-5 [1Mbps]; 2480MHz	2480.000000	1.052631	---	---	2479.496241	2480.548872
BT-5 [2Mbps]; 2402MHz	2402.000000	2.035088	---	---	2401.012531	2403.047619
BT-5 [2Mbps]; 2440MHz	2440.000000	2.045113	---	---	2439.012531	2441.057644
BT-5 [2Mbps]; 2480MHz	2480.000000	2.045113	---	---	2479.012531	2481.057644

Remark: for more information and graphical plot see annex A1 **TR23-1-0143001T001a-A1**

4.6 Emissions in non-restricted frequency bands

4.6.1 Description of the general conducted test setup and methodology, see below example:

The EUT's RF-signal is coupled out by a suitable antenna coupling connector (1). The signal is first attenuated (2) then connected to spectrum-analyzer (4) for RF-conducted measurements. The specific attenuation loss is determined prior to the measurement within a set-up attenuation measurement. These are then taken into account by correcting the measurement readings of the spectrum-analyzer.

Schematic:

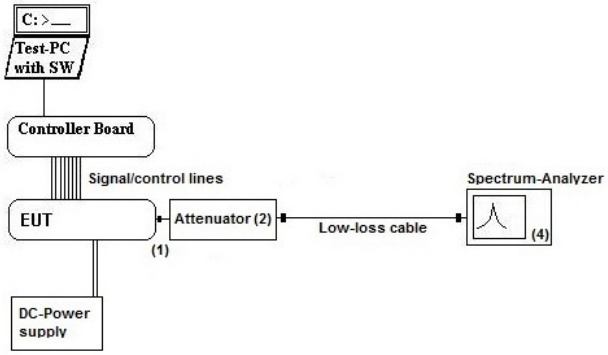

Testing method:

The measurement is made according to relevant reference clauses:
(See Tables *Summary of Test Results* and *Summary of Test Methods* on page 5)

Measurement is made using Rohde & Schwarz TS8997 test system.

The measurements were performed with the RBW set to 100 kHz & maximum carrier level was indicated with MAX-Hold positive peak detector using markers. Then a frequency line was set 20 or 30 dB below this measured maximum carrier level.

Then using RBW 100 kHz & spectrum analyzer span from 150 kHz to 25 GHz in three steps spurious emissions were measured with MAX-Hold positive peak detector.

The sweep time set as long as necessary to capture the full signal burst per hopping channel. The burst on-period is captured by setting appropriate markers in the rising and falling edges.

EUT settings
The EUT was instructed to send with maximum power (if adjustable) according applicants instructions.
Different modulation characteristics have been checked e.g. data rates which EUT can operate.

4.6.2 Measurement Location

Test site	120910 - Radio Laboratory 1 (TS 8997)

4.6.3 Limit

Frequency Range [MHz]	Limit [dBc]
0.15 – 25000	**-20 / -30**

4.6.4 Result

Maximum Level Peak [dBc]

Mode	Channel	Frequency [MHz]	Result
GFSK | 1Mbps	37	2402	PASS
GFSK | 1Mbps	19	2440	PASS
GFSK | 1Mbps	39	2480	PASS
GFSK | 2Mbps	37	2402	PASS
GFSK | 2Mbps	19	2440	PASS
GFSK | 2Mbps	39	2480	PASS

Remark1: every RF-Port tested separatelly in case on MIMO device

Remark2: for more information and graphical plot see annex A1 **TR23-1-0143001T001a-A1**

4.7 Radiated field strength emissions below 30 MHz

4.7.1 Description of the general test setup and methodology, see below example:

Evaluating the radiated field emissions are done first by an exploratory emission measurement and a final measurement for most critical frequencies determined.

The loop antenna was placed at 1 m height above ground plane and 3 m measurement distance from set-up for investigations. Because of reduced measurement distance, correction data were applied, as stated in chapter "General Limit - Radiated field strength emissions below 30 MHz". The tests are performed in the semi anechoic room recognized by the regulatory commission.

Schematic:

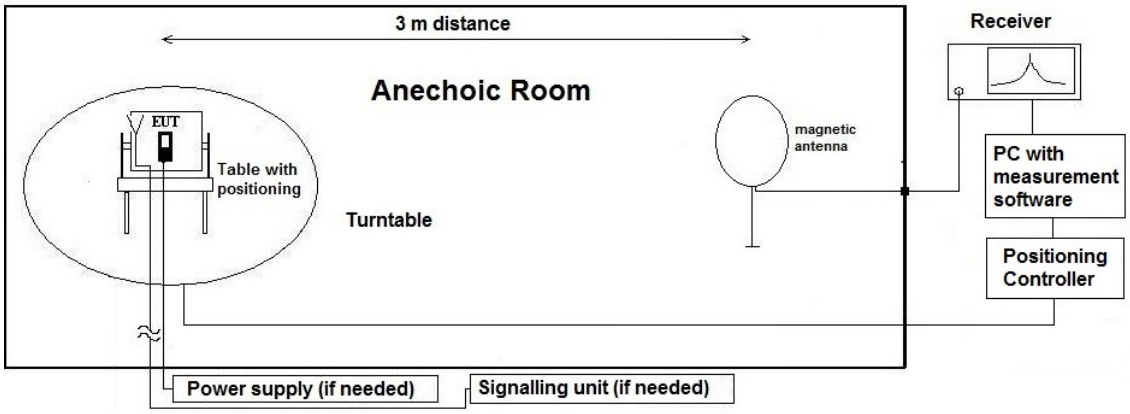

Testing method:

The measurement is made according to relevant reference clauses:
(See Tables *Summary of Test Results* and *Summary of Test Methods* on page 5)

Exploratory, preliminary measurements
The EUT and its associated accessories are placed on a non-conductive position manipulator (tipping device) of 0.8 m height which is placed on the turntable. By rotating the turntable (step 90°, range 0°to 360°) and the EUT itself either on 3-orthogonal axis (portable equipment) or 2-orthogonal axis (defined operational position of EUT), the emission spectrum was recorded.

The loop antenna was moved at least to 2-perpendicular axes (antenna vector in direction of EUT and parallel to EUT) in order to maximize the emissions. The results are documented in a diagram. Critical frequencies (low margin to limit) are saved within a data reduction table for further investigations. If various operating modes are supported, further investigations are made to find the worst-case. Also the interconnection cables and equipment position were varied in order to maximize the emissions.

Final measurement on critical frequencies
Based on the exploratory measurements, the most critical frequencies are re-measured by maintaining the EUT's worst-case operation mode, cable position, etc.

First a frequency zoom around the critical frequency is done to locate the frequency more precisely. After this step, for all identified critical frequencies, the maximum peak was determined.

Following parameters were varied: the turntable angle continuously in the range 0 to 360 degree, the EUT itself either over 3-orthogonal axis (not defined usage position) or 2-orthogonal axis (defined usage position).

On the determined worst-case position, a final measurement with necessary bandwidth and detector according standard has been carried out.

Formula:

$E_C = E_R + AF + C_L + D_F - G_A$

$M = L_T - E_C$

AF = Antenna factor
C_L = Cable loss
D_F = Distance correction factor (if used)
E_C = Electrical field – corrected value
E_R = Receiver reading
G_A = Gain of pre-amplifier (if used)
L_T = Limit
M = Margin

All units are dB-units, positive margin means value is below limit.

4.7.2 Sample calculation

Raw-Value [dBuV/m]	Antenna factor	Distance Correction [dB]	Cable Loss	Preamplifier	Resulting correction value [dB]	Final result [dBuV/m]	Remarks
19.83	18.9	-70.75	0.18	--	-51.67	-31.83	30 to 3 m correction used according ANSI C63.10-2013

Remark: This calculation is based on an example value at 458 kHz

4.7.3 Measurement Location

Test site	120901 - SAC3 - Radiated Emission <1GHz

4.7.4 Correction factors due to reduced meas. distance (f < 30 MHz):

The used correction factors when the measurement distance is reduced compared to regulatory measurement distance, are calculated according Extrapolation formulas valid for EUT's with maximum dimension of 0.625xLambda. Formula 2+3+4 as presented in ANSI C63.10, Chapter 6.4.4 are used for the calculations of proper extrapolation factors

Frequency Range	f [kHz/MHz]	Lambda [m]	Far-Field Point [m]	Distance Limit accord. 15.209 [m]	1st Condition (dmeas < Dnear-field)	2nd Condition (Limit distance bigger dnear-field)	Distance Correction accord. Formula
kHz	9	33333.33	5305.17	300	fullfilled	not fullfilled	-80.00
	10	30000.00	4774.65		fullfilled	not fullfilled	-80.00
	20	15000.00	2387.33		fullfilled	not fullfilled	-80.00
	30	10000.00	1591.55		fullfilled	not fullfilled	-80.00
	40	7500.00	1193.66		fullfilled	not fullfilled	-80.00
	50	6000.00	954.93		fullfilled	not fullfilled	-80.00
	60	5000.00	795.78		fullfilled	not fullfilled	-80.00
	70	4285.71	682.09		fullfilled	not fullfilled	-80.00
	80	3750.00	596.83		fullfilled	not fullfilled	-80.00
	90	3333.33	530.52		fullfilled	not fullfilled	-80.00
	100	3000.00	477.47		fullfilled	not fullfilled	-80.00
	125	2400.00	381.97		fullfilled	not fullfilled	-80.00
	200	1500.00	238.73		fullfilled	fullfilled	-78.02
	300	1000.00	159.16		fullfilled	fullfilled	-74.49
	400	750.00	119.37		fullfilled	fullfilled	-72.00
	490	612.24	97.44		fullfilled	fullfilled	-70.23
	500	600.00	95.49	30	fullfilled	not fullfilled	-40.00
	600	500.00	79.58		fullfilled	not fullfilled	-40.00
	700	428.57	68.21		fullfilled	not fullfilled	-40.00
	800	375.00	59.68		fullfilled	not fullfilled	-40.00
	900	333.33	53.05		fullfilled	not fullfilled	-40.00
MHz	1.00	300.00	47.75		fullfilled	not fullfilled	-40.00
	1.59	188.50	**30.00**		fullfilled	not fullfilled	-40.00
	2.00	150.00	23.87		fullfilled	fullfilled	-38.02
	3.00	100.00	15.92		fullfilled	fullfilled	-34.49
	4.00	75.00	11.94		fullfilled	fullfilled	-32.00
	5.00	60.00	9.55		fullfilled	fullfilled	-30.06
	6.00	50.00	7.96		fullfilled	fullfilled	-28.47
	7.00	42.86	6.82		fullfilled	fullfilled	-27.13
	8.00	37.50	5.97		fullfilled	fullfilled	-25.97
	9.00	33.33	5.31		fullfilled	fullfilled	-24.95
	10.00	30.00	4.77		fullfilled	fullfilled	-24.04
	10.60	28.30	4.50		fullfilled	fullfilled	-23.53
	11.00	27.27	4.34		fullfilled	fullfilled	-23.21
	12.00	25.00	3.98		fullfilled	fullfilled	-22.45
	13.56	22.12	3.52		fullfilled	fullfilled	-21.39
	15.00	20.00	3.18		fullfilled	fullfilled	-20.51
	15.92	18.85	**3.00**		fullfilled	fullfilled	-20.00
	17.00	17.65	2.81		not fullfilled	fullfilled	-20.00
	18.00	16.67	2.65		not fullfilled	fullfilled	-20.00
	20.00	15.00	2.39		not fullfilled	fullfilled	-20.00
	21.00	14.29	2.27		not fullfilled	fullfilled	-20.00
	23.00	13.04	2.08		not fullfilled	fullfilled	-20.00
	25.00	12.00	1.91		not fullfilled	fullfilled	-20.00
	27.00	11.11	1.77		not fullfilled	fullfilled	-20.00
	29.00	10.34	1.65		not fullfilled	fullfilled	-20.00
	30.00	10.00	1.59		not fullfilled	fullfilled	-20.00

4.7.5 Limit

Radiated emissions limits, (3 meters)					
Frequency Range [MHz]	Limit [µV/m]	Limit [dBµV/m] *	Distance [m]	Detector	RBW [kHz]
0.009 – 0.09	2400 / f [kHz]	67.6 – 20Log(f) (kHz)	300	Pk & Avg	0.2
0.09 – 0.11	2400 / f [kHz]	67.6 – 20Log(f) (kHz)	300	Quasi peak	0.2
0.11 – 0.15	2400 / f [kHz]	67.6 – 20Log(f) (kHz)	300	Pk & Avg	0.2
0.15 – 0.49	2400 / f [kHz]	67.6 – 20Log(f) (kHz)	300	Pk & Avg	9
0.49 – 1.705	24000 / f [kHz]	87.6 – 20Log(f) (kHz)	30	Quasi peak	9
1.705 - 30	30	29.5	30	Quasi peak	9

*Remark: In Canada same limits apply, just unit reference is different

4.7.6 Result

Diagram	Channel	Mode	Maximum Level [dBµV/m] Frequency Range 0.009 – 30 MHz	Result
2.01	Low	BLE_GFSK_Standing	No peaks < 6 dB margin found	PASS
2.02	Low	BLE_GFSK_Laying	No peaks < 6 dB margin found	PASS
2.03	Mid	BLE_GFSK	No peaks < 6 dB margin found	PASS
2.04	High	BLE_GFSK	No peaks < 6 dB margin found	PASS

Remark: for more information and graphical plot see annex A1 **TR23-1-0143001T001a-A1**

4.8 Radiated field strength emissions 30 MHz – 1 GHz

4.8.1 Description of the general test setup and methodology, see below example:

Evaluating the emissions have to be done first by an exploratory emissions measurement and a final measurement for most critical frequencies. The tests are performed in a CISPR 16-1-4:2010 compliant semi anechoic room (SAR) and fully anechoic room (FAR) recognized by the regulatory commission. The measurement distance was set to 3 meter for frequencies up to 18 GHz and 2 meter above 18 GHz. A logarithmic periodic antenna is used for the frequency range 30 MHz to 1 GHz. Horn antennas are used for frequency range 1 GHz to 40 GHz. The EUT is aligned within 3 dB beam width of the measurement antenna with three orthogonal axis measurements on the EUT.

Schematic:

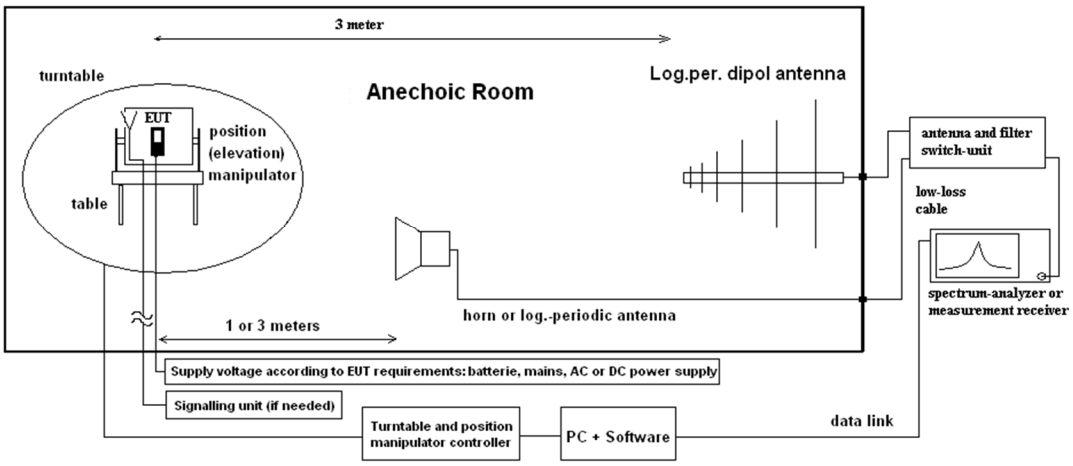

Testing method:

The measurement is made according to relevant reference clauses:
(See Tables *Summary of Test Results* and *Summary of Test Methods* on page 5)

Exploratory, preliminary measurements
The EUT and its associated accessories are placed on a non-conductive position manipulator (tipping device) of 0.8 m height which is placed on the turntable. By rotating the turntable (range 0° to 360°, step 90°) and the EUT itself either on 3-orthogonal axis (portable equipment) or 2-orthogonal axis (defined operational position of EUT) the emission spectrum and its characteristics was recorded with an EMI-receiver, broadband antenna and software.

Measurement antenna: horizontal and vertical, heights: 1,0 m and 1,82 m as worst-case determined by an exploratory emission measurements. The results are documented in a diagram. Critical frequencies (low margin to limit) are saved within a table for further investigations. If various operating modes are supported, further investigations are made to find the worst-case of them. Also the interconnection cables and equipment position were varied in order to maximize the emissions.

Final measurement on critical frequencies
Based on the exploratory measurements, the most critical frequencies are re-measured by main-taining the EUT's worst-case operation mode, cable position, etc. either on 10m OATS or 3m semi-anechoic room.
First a frequency zoom around the critical frequency is done to locate the frequency more precisely. After this step, for all identified critical frequencies, the maximum peak was determined.

Following parameters were varied: the turntable angle continuously in the range 0 to 360 degree, the EUT itself either over 3-orthogonal axis (not defined usage position) or 2-orthogonal axis (defined usage position). The measurement antenna height between 1 m and 4 m.
On the determined worst-case position, a final measurement with necessary bandwidth and detector according standard has been carried out

Formula:

$E_C = E_R + AF + C_L + D_F - G_A$ (1)

$M = L_T - E_C$ (2)

AF = Antenna factor
C_L = Cable loss
D_F = Distance correction factor (if used)
E_C = Electrical field – corrected value
E_R = Receiver reading
G_A = Gain of pre-amplifier (if used)
L_T = Limit
M = Margin

All units are dB-units, positive margin means value is below limit.

4.8.2 Sample calculation

Raw-Value [dBuV/m]	Antenna factor	Distance Correction [dB]	Cable Loss	Preamplifier	Resulting correction value [dB]	Final result [dBuV/m]	Remarks
32.7	22.25	--	3.1	--	25.35	58.05	--

Remark: This calculation is based on an example value at 800.4 MHz

4.8.3 Measurement Location

Test site	120901 - SAC3 - Radiated Emission <1GHz

4.8.4 Limit

Radiated emissions limits, (3 meters)				
Frequency Range [MHz]	Limit [µV/m]	Limit [dBµV/m]	Detector	RBW / VBW [kHz]
30 - 88	100	40.0	Quasi peak	100 / 300
88 - 216	150	43.5	Quasi peak	100 / 300
216 - 960	200	46.0	Quasi peak	100 / 300
960 - 1000	500	54.0	Quasi peak	100 / 300

4.8.5 Result

Diagram	Channel	Mode	Maximum Level [dBµV/m] Frequency Range 30 – 1000 MHz	Result
3.01	Low	BLE_GFSK_Standing	No peaks < 6 dB margin found	PASS
3.02	Low	BLE_GFSK_Laying	No peaks < 6 dB margin found	PASS
3.03	Mid	BLE_GFSK	No peaks < 6 dB margin found	PASS
3.04	High	BLE_GFSK	No peaks < 6 dB margin found	PASS

Remark: for more information and graphical plot see annex A1 **TR23-1-0143001T001a-A1**

4.9 Radiated field strength emissions above 1 GHz

4.9.1 Description of the general test setup and methodology, see below example:

Evaluating the emissions have to be done first by an exploratory emissions measurement and a final measurement for most critical frequencies. The tests are performed in a CISPR 18-1-4:2010 compliant fully anechoic room (FAR) recognized by the regulatory commission. The measurement distance was set to 3 meter for frequencies up to 18 GHz and 2 meter above 18 GHz. A logarithmic periodic antenna is used for the frequency range 30 MHz to 1 GHz. Horn antennas are used for frequency range 1 GHz to 40 GHz. The EUT is aligned within 3 dB beam width of the measurement antenna with three orthogonal axis measurements on the EUT.

Schematic:

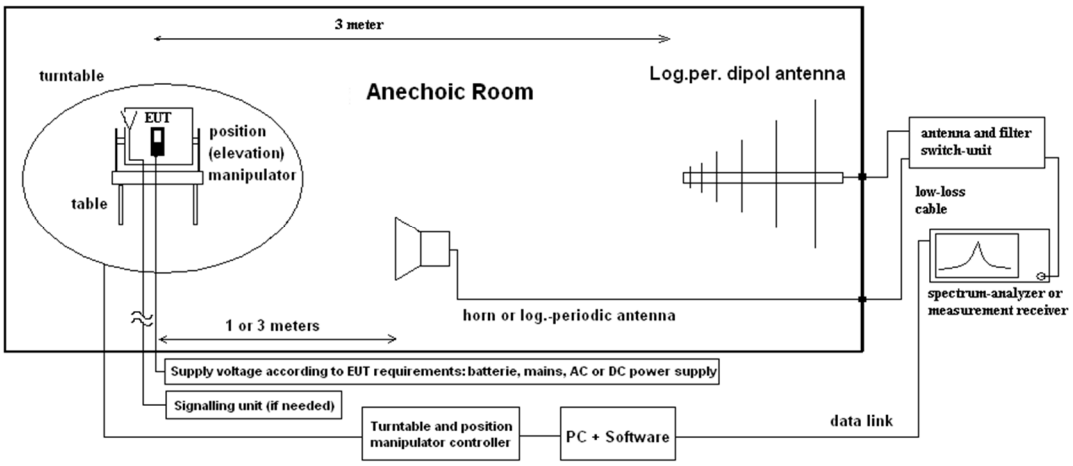

Testing method:

The measurement is made according to relevant reference clauses:
(See Tables *Summary of Test Results* and *Summary of Test Methods* on page 5)

Exploratory, preliminary measurements
The EUT and its associated accessories are placed on a non-conductive position manipulator (tipping device) of 1.55 m height which is placed on the turntable. By rotating the turntable (range 0° to 360°, step 15°) and the EUT itself either on 3-orthogonal axis (portable equipment) or 2-orthogonal axis (defined operational position of EUT) the emission spectrum and its characteristics was recorded with an EMI-receiver, broadband antenna and software.
The measurements are performed in horizontal and vertical polarization of the measurement antennas. The results are documented in a diagram. Critical frequencies (low margin to limit) are saved within a table for further investigations. If various operating modes are supported, further investigations are made to find the worst-case of them. Also the interconnection cables and equipment position were varied in order to maximize the emissions.

Final measurement on critical frequencies
Based on the exploratory measurements, the most critical frequencies are re-measured by maintaining the EUT's worst-case operation mode, cable position, etc.

First a frequency zoom around the critical frequency is done to locate the frequency more precisely. After this step, for all identified critical frequencies, the maximum peak was determined.
Following parameters were varied: the turntable angle continuously in the range 0 to 360 degree, the EUT itself over 3-orthogonal axis and the height for EUT with large dimensions or three axis scan for portable/small equipment.

On the determined worst-case position, a final measurement with necessary bandwidth and detector according standard has been carried out.

Formula:

$E_C = E_R + A_F + C_L + D_F - G_A$ (1)

$M = L_T - E_C$ (2)

E_C = Electrical field – corrected value
E_R = Receiver reading
M = Margin
L_T = Limit
A_F = Antenna factor
C_L = Cable loss
D_F = Distance correction factor (if used)
G_A = Gain of pre-amplifier (if used)

All units are dB-units, positive margin means value is below limit.

4.9.2 Sample calculation

Raw-Value [dBuV/m]	Antenna factor	Distance Correction [dB]	Cable Loss + Preamplifier	Resulting correction value [dB]	Final result [dBuV/m]	Remarks
29.37	41.20	--	24.28	16.92	46.3	CableLoss and PreAmp data in one data correction file

Remark: This calculation is based on an example value at 10 GHz

4.9.3 Measurement Location

Test site 1 – 18 GHz	120904 - FAC1 - Radiated Emissions
Test site 18 – 26.5 GHz	120907 - FAC2 - Radiated Emissions

4.9.4 Limit

Radiated emissions limits, (3 meters)				
Frequency Range [MHz]	**Limit [µV/m]**	**Limit [dBµV/m]**	**Detector**	**RBW / VBW [kHz]**
Above 1000	500	54	Average	1000 / 3000
Above 1000	5000	74	Peak	1000 / 3000

4.9.5 Result

Diagram	Channel	Mode	Maximum Level [dBµV/m] Frequency Range 1 – 18 GHz	Result
4.01a	Low	1	No peaks < 6 dB margin found	PASS
4.02a	Mid	1	No peaks < 6 dB margin found	PASS
4.03a	High	1	No peaks < 6 dB margin found	PASS

Remark: for more information and graphical plot see annex A1 **TR23-1-0143001T001a-A1**

Diagram	Channel	Mode	Maximum Level [dBµV/m] Frequency Range 18 – 26.5 GHz	Result
4.04	Low	1_AntH	No peaks < 6 dB margin found	PASS
4.05	Low	1_AntV	No peaks < 6 dB margin found	PASS
4.06	Mid	1_AntH	No peaks < 6 dB margin found	PASS
4.07	Mid	1_AntV	No peaks < 6 dB margin found	PASS
4.08	High	1_AntH	No peaks < 6 dB margin found	PASS
4.09	High	1_AntV	No peaks < 6 dB margin found	PASS

Remark: for more information and graphical plot see annex A1 **TR23-1-0143001T001a-A1**

4.10 Radiated Band-Edge emissions

4.10.1 Description of the general test setup and methodology, see below example:

Schematic:

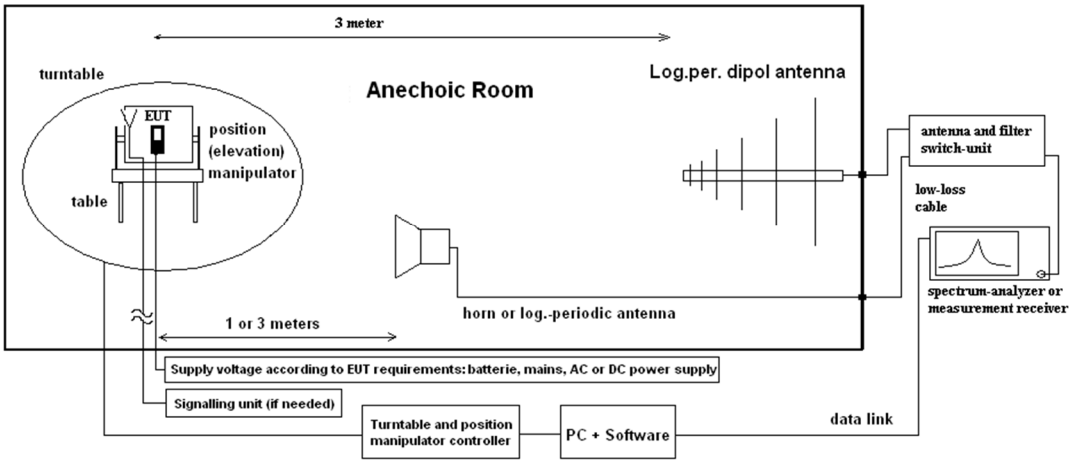

Testing method:

The measurement is made according to relevant reference clauses:
(See Tables *Summary of Test Results* and *Summary of Test Methods* on page 5)

For uncritical results where a measurement resolution bandwidth of 1MHz can clearly show the compliance without influencing the results, a field strength measurement was performed to show compliance.

For critical results a Marker-Delta marker method was used for showing compliance to restricted bands.
The method consists of three independent steps:

1. Step: Prior to the measurement the fundamental radiated In-Band field strength was performed. The determined value is used as reference value.

2. Step: Second step consist of finding the relative attenuation between the fundamental emission and the maximum local out-of-band emission (within 2 MHz range around the band edge either on the band-edge directly or some modulation product if the level is greater than that on the band-edge) when measured with lower resolution bandwidth.

3. .Step: The delta value recorded in step 2 will be subtracted from value recorded in step 1, thus giving the required field strength at the band-edge. This value must fulfil the requirements for radiated spurious emissions in restricted bands in FCC §15.205 with the general limits of FCC §15.209

The EUT was instructed to send with maximum power (if adjustable) according to applicants instructions.

4.10.2 Measurement Location

Test site	120904 - FAC1 - Radiated Emissions

4.10.3 Limit

Frequency Range [MHz]	Pk Limit [dBc]	Avg Limit [dBc]	Avg Limit [dBµV/m]	Pk Limit [dBµV/m]	Detector	RBW / VBW [kHz]
Below 2390	-	-	54	74	Average / Peak	100 / 300
Above 2483.5	-	-	54	74	Average / Peak	1000 / 3000
2390 - 2400	-20	-	-	-	Peak	100 / 300
2390 - 2400	-	-30	-	-	Average	100 / 300

4.10.4 Result

Non-restricted bands near-by

Diagram	Channel	Mode	Peak [dBc]	Average [dBc]	Result
9.01	Low	1	44.52	41.51	PASS

Remark: for more information and graphical plot see annex A1 **TR23-1-0143001T001a-A1**

Restricted bands near-by

Diagram	Channel	Mode	Peak [dBµV/m]	Average [dBµV/m]	Result
9.02	High	1	61.39	46.80	PASS

Remark: for more information and graphical plot see annex A1 **TR23-1-0143001T001a-A1**

4.11 Equipment lists

ID	Description	Manufacturer	SerNo	CheckType	Last Check	Interval	Next Check
	120901 - SAC3 - Radiated Emission <1GHz			calchk	cal: 2015-Jul-21 chk: 2021-Jul-27	cal: 10Y chk: 12M	cal: 2025-Jul-21 chk: 2022-Jul-27
20341	Digital Multimeter Fluke 112	Fluke Deutschland GmbH / Glottertal	81650455	cal	cal: 2022-May-18	cal: 24M	cal: 2024-May-18
20442	Semi Anechoic Chamber	ETS-Lindgren Gmbh / Taufkirchen	without	cnn	cal: - chk: -	cal: - chk: -	cal: - chk: -
20482	filter matrix Filter matrix SAR 1	cetecom advanced GmbH / Essen	without	cnn	cal: - chk: -	cal: - chk: -	cal: - chk: -
20574	Biconilog Hybrid Antenna BTA-L	Frankonia GmbH / Heideck	980026L	cal	cal: 2022-Jun-15	cal: 36M	cal: 2025-Jun-15
20620	Test Receiver ESU26	Rohde & Schwarz Messgerätebau GmbH / Memmingen	100362	cal	cal: 2023-May-24	cal: 12M	cal: 2024-May-24
20885	Power Supply EA3632A	Agilent Technologies Deutschland GmbH	75305850	cnn	cal: - chk: -	cal: - chk: -	cal: - chk: -
25038	Loop Antenna HFH2-Z2	Rohde & Schwarz Messgerätebau GmbH / Memmingen	879824/13	cal	cal: 2022-Jul-04	cal: 24M	cal: 2024-Jul-04
	120904 - FAC1 - Radiated Emissions			chk	chk: 2023-Aug-22	chk: 12M	chk: 2024-Aug-22
20020	Horn Antenna 3115 (Subst 1)	EMCO Elektronik GmbH	9107-3699	calchk	cal: 2021-Aug-17 chk: 2013-Apr-20	cal: 36M chk: 12M	cal: 2024-Aug-17
20066	Notch Filter WRCT 1900/2200-5/40-10EEK	Wainwright Instruments GmbH	5	chk	chk: 2023-Aug-22	chk: 12M	chk: 2024-Aug-22
20121	Notch Filter WRCB 1879,5/1880,5EE	Wainwright Instruments GmbH	15	chk	chk: 2023-Aug-22	chk: 12M	chk: 2024-Aug-22
20122	Notch Filter WRCB 1747/1748	Wainwright Instruments GmbH / Andechs	12	chk	chk: 2023-Aug-22	chk: 12M	chk: 2024-Aug-22
20254	High Pass Filter 5HC 2600/12750-1.5KK	Trilithic	23042	chk	chk: 2023-Aug-22	chk: 12M	chk: 2024-Aug-22
20287	Pre-Amplifier 25MHz - 4GHz AMF-2D-100M4G-35-10P	Miteq Inc.	379418	chk	chk: 2023-Aug-22	chk: 12M	chk: 2024-Aug-22
20290	Notch Filter WRCA 901,9/903,1SS	Wainwright Instruments GmbH	3RR	chk	chk: 2023-Aug-22	chk: 12M	chk: 2024-Aug-22
20291	High Pass Filter WHJ 2200-4EE	Wainwright Instruments GmbH	14	chk	chk: 2023-Aug-22	chk: 12M	chk: 2024-Aug-22
20338	Pre-Amplifier 100MHz - 26GHz JS4-00102600-38-5P	Miteq Inc.	838697	chk	chk: 2023-Aug-22	chk: 12M	chk: 2024-Aug-22
20448	Notch Filter WRCT 1850.0/2170.0-5/40-10SSK	Wainwright Instruments GmbH	5	chk	chk: 2023-Aug-22	chk: 12M	chk: 2024-Aug-22
20449	Notch Filter WRCT 824.0/894.0-5/40-8SSK	Wainwright Instruments GmbH	1	chk	chk: 2023-Aug-22	chk: 12M	chk: 2024-Aug-22
20484	Pre-Amplifier 2,5GHz - 18GHz AMF-5D-02501800-25-10P	Miteq Inc.	1244554	chk	chk: 2023-Aug-22	chk: 12M	chk: 2024-Aug-22
20489	Test Receiver ESU40	Rohde & Schwarz Messgerätebau GmbH / Memmingen	100030	cal	cal: 2023-May-24	cal: 12M	cal: 2024-May-24
20512	Notch Filter WRCA 800/960-02/40-6EEK (GSM 850)	Wainwright Instruments GmbH	24	chk	chk: 2023-Aug-22	chk: 12M	chk: 2024-Aug-22
20549	Log. Per. Antenna HL025	Rohde & Schwarz Messgerätebau GmbH	1000060	calchk	cal: 2021-Aug-18	cal: 36M chk: 12M	cal: 2024-Aug-18
20558	Fully Anechoic Chamber 1	ETS-Lindgren Gmbh / Taufkirchen	-	cnn	cal: - chk: -	cal: - chk: -	cal: - chk: -
20608	Ultrabroadband-Antenna HL562	Rohde & Schwarz Messgerätebau GmbH / Memmingen	830547/009	cal	cal: 2023-Jul-04	cal: 36M	cal: 2026-Jul-04
20611	Power Supply E3632A	Agilent Technologies Deutschland GmbH	KR 75305854	cpu			
20690	Spectrum Analyzer FSU	Rohde & Schwarz Messgerätebau GmbH / Memmingen	100302/026	cal	cal: 2023-May-25	cal: 24M	cal: 2025-May-25
20720	Measurement Software EMC32 [FAC]	Rohde & Schwarz Messgerätebau GmbH	V10.xx	cnn	cal: - chk: -	cal: - chk: -	cal: - chk: -
20868	High Pass Filter AFH-07000	AtlanTecRF	16071300004	chk	chk: 2023-Aug-22	chk: 12M	chk: 2024-Aug-22
20883	Open Switch and control Platform OSP-B200S2 Satellite	Rohde & Schwarz Messgerätebau GmbH / Memmingen	101432	chk	chk: 2023-Aug-22	chk: 12M	chk: 2024-Aug-22
20884	Open Switch and control Platform OSP320	Rohde & Schwarz Messgerätebau GmbH / Memmingen	101391	chk	chk: 2023-Aug-22	chk: 12M	chk: 2024-Aug-22
	120907 - FAC2 - Radiated Emissions			chk	chk: 2023-Feb-21	chk: 12M	chk: 2024-Feb-21
20005	AC - LISN 50 Ohm/50µH ESH2-Z5	Rohde & Schwarz Messgerätebau GmbH / Memmingen	861741/005	cal	cal: 2023-May-25	cal: 12M	cal: 2024-May-25
20133	Horn Antenna 3115 (Meas 1)	EMCO Elektronik GmbH / Gilching	9012-3629	cal	cal: 2023-May-22	cal: 36M	cal: 2026-May-22
20302	Horn Antenna BBHA9170 (Meas 1)	Schwarzbeck Mess-Elektronik OHG / Schönau	155	cpu	chk: 2020-Apr-15	chk: 12M	
20412	Fully Anechoic Chamber 2	ETS-Lindgren Gmbh / Taufkirchen	without	chk	chk: 2023-Apr-14	chk: 12M	chk: 2024-Apr-14
20729	FS-Z140	Rohde & Schwarz Messgerätebau GmbH / Memmingen	101004	cal	cal: 2023-Jun-16	cal: 36M	cal: 2026-Jun-16
20730	FS-Z110	Rohde & Schwarz Messgerätebau GmbH / Memmingen	101468	cal	cal: 2023-Jun-02	cal: 36M	cal: 2026-Jun-02
20731	FS-Z75	Rohde & Schwarz Messgerätebau GmbH / Memmingen	101022	cal	cal: 2022-May-18	cal: 36M	cal: 2025-May-18
20732	Signal- and Spectrum Analyzer FSW67	Rohde & Schwarz Messgerätebau GmbH / Memmingen	104023	cal	cal: 2023-May-25	cal: 12M	cal: 2024-May-25
20733	Harmonic Mixer FS-Z220	RPG-Radiometer Physics GmbH	101009	cal	cal: 2021-May-27	cal: 36M	cal: 2024-May-27
20734	Harmonic Mixer FS-Z325	RPG-Radiometer Physics GmbH / Meckenheim	101005	cal	cal: 2021-May-27	cal: 36M	cal: 2024-May-27
20765	Pickett-Potter Horn Antenna FH-PP 40-60	RPG-Radiometer Physics GmbH / Meckenheim	010001	chk	chk: 2023-Oct-20	chk: 12M	chk: 2024-Oct-20
20767	Pickett-Potter Horn Antenna FH-PP 140-220	RPG-Radiometer Physics GmbH / Meckenheim	010011	chk	chk: 2023-Oct-20	chk: 12M	chk: 2024-Oct-20
20811	Horn Antenna ASY-SGH-124-SMA	Antenna Systems Solutions S.L	29F14182337	cal	cal: 2021-Oct-20	cal: 36M	cal: 2024-Oct-20
20812	Pickett-Potter Horn Antenna FH-PP-325	RPG-Radiometer Physics GmbH / Meckenheim	10024	chk	chk: 2023-Oct-20	chk: 12M	chk: 2024-Oct-20

ID	Description	Manufacturer	SerNo	CheckType	Last Check	Interval	Next Check
20813	Pickett-Potter Horn Antenna FH-PP 075	RPG-Radiometer Physics GmbH / Meckenheim	10006	chk	chk: 2023-Oct-20	chk: 12M	chk: 2024-Oct-20
20814	Pickett-Potter Horn Antenna FH-PP 140	RPG-Radiometer Physics GmbH / Meckenheim	10008	chk	chk: 2023-Oct-20	chk: 12M	chk: 2024-Oct-20
20815	Pickett-Potter Horn Antenna FH-PP 110	RPG-Radiometer Physics GmbH / Meckenheim	10014	chk	chk: 2023-Oct-20	chk: 12M	chk: 2024-Oct-20
20816	SGH Antenna SGH-26-WR10	Anteral S.L.	1144	cnn	cal: - chk: -	cal: - chk: -	cal: - chk: -
20817	Waveguide Rectangular Horn Antenna SAR-2309-22-S2	ERAVANT / Torrance	13254-01	chk	chk: 2023-Oct-20	chk: 12M	chk: 2024-Oct-20
20836	1-18 GHz Amplifier	Wright Technologies, Inc., Inc. / Roseville	0001	chk		chk: 36M	
20907	Waveguide WR-15 attenuator STA-30-15-M2	SAGE Millimeter Inc.	13256-01	cnn	cal: - chk: -	cal: - chk: -	cal: - chk: -
20908	Waveguide WR 10 attenuator STA-30-10-M2	SAGE Millimeter Inc.	13256-01	cnn	cal: - chk: -	cal: - chk: -	cal: - chk: -
20909	Waveguide Horn Antenna PE9881-24	Pasternack Enterprises, Inc.	37/2016	cnn	cal: - chk: -	cal: - chk: -	cal: - chk: -
20910	Frequency Multiplier 936VF-10/385	MI-Wave, Millimeter Wave Products Inc.	142	cnn	cal: - chk: -	cal: - chk: -	cal: - chk: -
20911	Frequency Multiplier 938WF-10/387	MI-Wave, Millimeter Wave Products Inc.	141	cnn	cal: - chk: -	cal: - chk: -	cal: - chk: -
20913	Phase Amplitude Stable Cable Assembly DC-40GHz	RF-Lambda Europe GmbH	AC19040001	cnn	cal: - chk: -	cal: - chk: -	cal: - chk: -
25457	DRG Horn Antenna SAS-574	A.H. Systems, Inc. / Chatsworth	383	cal	cal: 2022-Mar-28	cal: 36M	cal: 2025-Mar-28
	120910 - Radio Laboratory 1 (TS 8997)			chk	chk: 2023-Jul-10	chk: 12M	chk: 2024-Jul-10
20559	Vector Signal Generator SMU200A	Rohde & Schwarz Messgerätebau GmbH / Memmingen	103736	cal	cal: 2023-May-25	cal: 24M	cal: 2025-May-25
20691	Open Switch and control Platform OSP157W 8 Port Plus	Rohde & Schwarz Messgerätebau GmbH / Memmingen	100950	cal	cal: 2023-Jun-30	cal: 36M	cal: 2026-Jun-30
20805	Open Switch and control Platform OSP B157WX 40GHz 8Port Switch	Rohde & Schwarz Messgerätebau GmbH / Memmingen	101264	cal	cal: 2023-May-26	cal: 36M	cal: 2026-May-26
20866	Signal Analyzer FSV3030	Rohde & Schwarz Messgerätebau GmbH / Memmingen	101247	cal	cal: 2023-Jun-14	cal: 12M	cal: 2024-Jun-14
20871	NRP-Z81	Rohde & Schwarz Messgerätebau GmbH / Memmingen	104631	cal	cal: 2023-May-23	cal: 12M	cal: 2024-May-23
20872	NRX Power Meter	Rohde & Schwarz Messgerätebau GmbH / Memmingen	101831	cal	cal: 2022-May-17	cal: 24M	cal: 2024-May-17
20904	Climatic Chamber ClimeEvent C/1000/70a/5	Weiss Umwelttechnik GmbH / Reiskirchen-Lindenstruth	58226223240010	cal	cal: 2022-Nov-29	cal: 24M	cal: 2024-Nov-29
20927	Signal Generator SMF 100A	Rohde & Schwarz Messgerätebau GmbH / Memmingen	102109	cal	cal: 2022-May-19	cal: 36M	cal: 2025-May-19

Tools used in 'P1M1'

4.11.1 Legend

Note / remarks	Interval of calibration & Verification
12M	12 months
24M	24 months
36M	36 months
10Y	10 Years

Abbreviation Check Type	Description
cnn	Calibration and verification not necessary
cal	Calibration
calchk	Calibration plus intermediate Verification
chk	Verification
cpu	Verification before usage

5 Results from external laboratory

None	-

6 Opinions and interpretations

None	-

7 List of abbreviations

None	-

8 Measurement Uncertainty valid for conducted/radiated measurements

The reported uncertainties are calculated based on the standard uncertainty multiplied with the appropriate coverage factor **k**, such that a confidence level of approximately 95% is achieved. For uncertainty determination, each component used in the concrete measurement set-up was taken in account and it contribution to the overall uncertainty according its statistical distribution calculated.

Issue No.	Measurement type	Reference	Frequency range of measurement		Calculated Uncertainty based on confidence level of 95.54%	Remarks
			Start [MHz]	Stop [MHz]		
1	Magnetic Field Strength	EN ,FCC, JP, IC	0.009	30	4.86	Magnetic loop antenna, Pre-Amp on
2	RF-Output Power (EIRP) Unwanted emissions (EIRP) [dB]	EN, FCC, JP, IC	30	100	4.57	without Pre-Amp
			30	100	4.91	with Pre-Amp
			100	1000	4.02	without Pre-Amp
			100	1000	4.26	with Pre-Amp
			1000	18000	4.36	without Pre-Amp
			1000	18000	5.23	with Pre-Amp
			18000	33000	4.92	Schwarzbeck BBHA9170 (#20302) Antenna set-up non-waveguide antenna)
			33000	50000	4.17	Set-up for Q-Band (WR-22), non-wave guide antenna
			40000	60000	4.69	Set-up U-Band (WR-19), non-waveguide antenna
			50000	75000	4.06	External Mixer set-up V-Band (WR-15)
			75000	110000	4.17	External Mixer set-up W-Band (WR-6)
			90000	140000	5.49	External Mixer set-up F-Band (WR-8)
			140000	225000	6.22	External Mixer set-up G-Band (WR-5)
			225000	325000	7.04	External Mixer set-up (WR-3)
			325000	500000	8.84	External Mixer set-up (WR-2.2)
3	Radiated Blocking [dB]	EN	1000	18000	2.85	Typical set-up with microwave generator and antenna, value for 7 GHz calculated
			18000	33000	4.66	Typical set-up with microwave generator and antenna
			33000	50000	3.48	WR-22 set-up
			50000	75000	3.73	WR-15 set-up
			75000	110000	4.26	WR-6 set-up
4	Frequency Error / UWB+FMCW [kHz]	EN, FCC, JP, ISED	40000	77000	276.19	calculated for 77 GHz (FMCW) carrier
			6000	7000	33.92	calculated for 6.5 GHz UWB Ch.5
	Frequency Error / NFC [Hz]	EN, FCC, JP, ISED	11.00	14.00	20.76	calculated for 13.56 MHz NFC carrier
5	TS 8997 Conducted Parameters	FCC15/18 / ISED	30	6000	1.11	1. Power measurement with Fast-sampling-detector
			30	6000	1.20	2. Power measurement with Spectrum-Analyzer
			30	6000	1.20	3. Power Spectrum-Density measurement
			30	7500	1.20	4. Conducted Spurious emissions
			0.009	30	2.56	5. Conducted Spurious emissions
			2.4	2.48	1.95 ppm	6a. Bandwidth / 2-Marker Method for 2.4 GHz ISM
			5.18	5.825	7.180 ppm	6b. Bandwidth / 2-Marker Method for 5 GHz WLAN
			5.18	5.825	1.099 ppm	7. Frequency (Marker method) for 5 GHz WLAN
			30	6000	0.11561 µs	8. Medium-Utilization factor / Timing
			30	6000	1.85	9a. Blocking-Level of companion device
			30	6000	1.62	9b. Blocking Generator level
6	Conducted Emissions	EN, FCC	0.009	30	3.57	general EMI-measurements on AC/DC ports

9 Versions of test reports (change history)

Version	Applied changes	Date of release
--	Initial release	2024-Apr-09
C01	Chapter 3.2: changed conducted output power from 0 to -4 dBm and antenna gain from 0.5 to 0.74 dBi. EIRP calculation changed accordingly.	2024-Apr-12
--	--	--

End Of Test Report