Radio Test Report

Report No.:STS2505051W01

Issued for

Horizon Powered USA Inc.

8350 NW 52nd Terrace, Suite 301, Miami, FL 33166 United States

Product Name:	4G/LTE MiFi Hotspot
Brand Name:	Horizon
Model Name:	MH07
Series Model(s):	N/A
FCC ID:	2BE94MH07
Test Standards:	47 CFR Part 2, 22, 24, 27, 90

The test results presented in this report relate only to the object tested. This report shall not be reproduced, except in full, without the written approval of the Shenzhen STS Test Services Co., Ltd.

TEST REPORT

Applicant's Name..... : Horizon Powered USA Inc.

Address ..... : 8350 NW 52nd Terrace, Suite 301, Miami, FL 33166 United States

Manufacturer's Name ..... : Horizon Powered USA Inc.

Address ..... : 8350 NW 52nd Terrace, Suite 301, Miami, FL 33166 United States

Product Description

Product Name..... : 4G/LTE MiFi Hotspot

Brand Name ..... : Horizon

Model Name ..... : MH07

Series Model(s) ..... : N/A

Test Standards..... : 47 CFR Part 2, 22, 24, 27, 90

Test Procedure ..... : KDB 971168 D01 v03r01,ANSI C63.26(2015)

This device described above has been tested by STS, the test results show that the equipment under test (EUT) is in compliance with the FCC requirements. And it is applicable only to the tested sample identified in the report.
The test results presented in this report relate only to the object tested. This report shall not be reproduced, except in full, without the written approval of the Shenzhen STS Test Services Co., Ltd.

Date of Test.....:

Date of receipt of test item .....: 12 May 2025

Date (s) of performance of tests.: 12 May 2025~19 May 2025

Date of Issue.....: 19 May 2025

Test Result.....: Pass

Testing Engineer : Lenon. Hou

(Lenon Hou)

Technical Manager : Skylar. Li

(Skylar Li)

Authorized Signatory : Bovey Yang

(Bovey Yang)

SHENZHEN STS TEST SERVICES CO., LTD. TESTING APPROVAL

Table of Contents Page

1 SUMMARY OF TEST RESULTS **5**
1.1 INTRODUCTION 7
2 PRODUCT INFORMATION **8**
3 TEST CONFIGURATION OF EQUIPMENT UNDER TEST **12**
4 MEASUREMENT INSTRUMENTS **16**
5 TEST ITEMS **17**
5.1 CONDUCTED OUTPUT POWER&TRANSMITTER RADIATED POWER 17
5.2 PEAK TO AVERAGE RATIO 74
5.3 OCCUPIED BANDWIDTH 75
5.4 FREQUENCY STABILITY 76
5.5 SPURIOUS EMISSIONS AT ANTENNA TERMINALS 88
5.6 BAND EDGE 89
5.7 FIELD STRENGTH OF SPURIOUS RADIATION MEASUREMENT 91
APPENDIX-PHOTOS OF TEST SETUP **154**

Revision History

Rev.	Issue Date	Report No.	Effect Page	Contents
00	19 May 2025	STS2505051W01	ALL	Initial Issue

101, Building B, Zhuoke Science Park, No. 190 Chongqing Road, Zhancheng Shequ, Fuhai Sub-District, Bao'an District, Shenzhen, Guangdong, China
Tel: +86-755 3688 6288 Fax: +86-755 3688 6277 Http://www.stsapp.com E-mail:sts@stsapp.com

1 SUMMARY OF TEST RESULTS

Test procedures according to the technical standards:

The radiated emission testing was performed according to the procedures of KDB 971168 D01 v03r01 and ANSI C63.26(2015)

Test Description	FCC Rules	Band	Test Limit	Test Result
Conducted Output Power	2.1046	/	Reporting Only	PASS
Transmitter Radiated Power	22.913	B5, B26	ERP < 7 Watt	PASS
	24.232(c)	B2, B25	EIRP < 2Watt	
	27.50(b)	B13	ERP < 3 Watt	
	27.50(c)	B12, B17, B71	ERP < 3 Watt	
	27.50(d)	B4, B66	EIRP < 1Watt	
	27.50(h)	B7	EIRP < 2Watt	
	90.635(b)	B26	ERP < 100Watt	
Peak-to-Average Ratio	22.913(d)	B5, B26	< 13 dB	PASS
	24.232(d)	B2, B25		
	27.50	B4, B7, B12, B13, B17, B66, B71		
Occupied Bandwidth	2.1049	/	Reporting Only	PASS
Frequency Stability	2.1055	/	< 2.5 ppm	PASS
	22.355	B5, B26		
	24.235	B2, B25		
	27.54	B4, B7, B12, B13, B17, B66, B71		
	90.213	B26		
Spurious Emission at Antenna Terminals	2.1051	/	< 43+10log10(P[Watts])	PASS
	22.917	B5, B26		

	24.238(a)	B2, B25		
	27.53(c)	B13		
	27.53(g)	B12, B17, B71		
	27.53(h)	B4, B66		
	90.691	B26		
	27.53(m)	B7	< 55+10log10(P[Watts])	
Band Edge	2.1051	/	Please refer to standard	PASS
	22.917	B5, B26		
	24.238(a)	B2, B25		
	27.53(c)	B13		
	27.53(g)	B12, B17, B71		
	27.53(h)	B4, B66		
	27.53(m)	B7, B41		
	90.543(e)	B14		
	90.691	B26		
Field Strength of Spurious Radiation	2.1053	/	< 43+10log10(P[Watts])	PASS
	22.917	B5, B26		
	24.238(a)	B2, B25		
	27.53(c)	B13		
	27.53(g)	B12, B17, B71		
	27.53(h)	B4, B66		
	90.691	B26		
	27.53(m)	B7	< 55+10log10(P[Watts])	

1.1 INTRODUCTION

TEST FACTORY

SHENZHEN STS TEST SERVICES CO., LTD

Add. : 101, Building B, Zhuoke Science Park, No.190 Chongqing Road, ZhanChengShequ, Fuhai Sub-District, Bao'an District, Shenzhen, Guang Dong, China

FCC test Firm Registration Number: 625569

IC test Firm Registration Number: 12108A

A2LA Certificate No.: 4338.01

MEASUREMENT UNCERTAINTY

The measurement uncertainties shown below were calculated in accordance with the requirements ofANSI C63.4-2014. All measurement uncertainty values are shown with a coverage factor of k = 2 toindicate a 95% level of confidence. The measurement data shown herein meets or exceeds the UCISPRmeasurement uncertainty values specified in CISPR 16-4-2 and, thus, can be compared directly tospecified limits to determine compliance.

No.	Item	Uncertainty
1	RF output power, conducted	±0.755dB
2	Unwanted Emissions, conducted	±2.874dB
3	All emissions, radiated 9K-30MHz	±3.80dB
4	All emissions, radiated 30M-1GHz	±4.18dB
5	All emissions, radiated 1G-6GHz	±4.90dB
6	All emissions, radiated>6G	±5.24dB
7	Conducted Emission (9KHz-150KHz)	±2.19dB
8	Conducted Emission (150KHz-30MHz)	±2.53dB
9	Occupied Channel Bandwidth	±3.5%
10	Power Spectral Density, conducted	±1.245dB
11	Duty Cycle	±3.2%

2 PRODUCT INFORMATION

Product Name	4G/LTE MiFi Hotspot
Brand Name	Horizon
Model Name	MH07
Series Model(s)	N/A
Model Difference	N/A
Tx Frequency:	WCDMA B2: 1850-1910 MHz WCDMA B5: 824-849 MHz WCDMA B4: 1710-1755 MHz LTE Band 2:1850~1910MHz LTE Band 4:1710~1755MHz LTE Band 5:824~849MHz LTE Band 7: 2500-2570MHz LTE Band 12:699~716MHz LTE Band 13:777~787MHz LTE Band 17: 704-716 MHz LTE Band 25:1850~1915MHz LTE Band 26 Part 90:814~824MHz LTE Band 26 Part 22:824-849 MHz LTE Band 66:1710~1780MHz LTE Band 71: 663-698 MHz
Rx Frequency:	WCDMA B2: 1930-1990 MHz WCDMA B5: 869-894 MHz WCDMA B4: 2110-2155 MHz LTE Band 2:1930 ~1990MHz LTE Band 4:2110~2155MHz LTE Band 5:869~894MHz LTE Band 7: 2620-2690MHz LTE Band 12:729~746MHz LTE Band 13:746~756MHz LTE Band 17: 734-746 MHz LTE Band 25:1930~1995MHz LTE Band 26 Part 90:859~869MHz LTE Band 26 Part 22:869-894MHz LTE Band 66:2110~2200MHz LTE Band 71: 617-652 MHz
Max RF Output Power:	WCDMA B2: 23.54dBm WCDMA B4: 23.6dBm WCDMA B5: 18.37dBm LTE B2: 24.01dBm LTE B4: 24.51dBm LTE B5: 21.92dBm LTE B7: 23.72dBm LTE B12: 26.69dBm LTE B13: 22.57dBm LTE B17: 26.41dBm LTE B25: 24.86dBm LTE B26 Part 90: 24.91dBm LTE B26 Part 22:25.36 dBm LTE B66: 23.47dBm LTE B71: 24.01dBm

Modulation Characteristics:	WCDMA: QPSK; HSDPA:QPSK/16QAM; HSUPA:BPSK LTE: QPSK /16QAM
SIM Card:	Only support single SIM Card.
Antenna:	PIFA
Antenna gain:	WCDMA B2: 1.52dBi WCDMA B4: 0.5dBi WCDMA B5: 2.18dBi LTE B2: 1.52dBi LTE B4: 0.5dBi LTE B5: 2.18dBi LTE B7: 1.93dBi LTE B12: 1.57dBi LTE B13: 1.9dBi LTE B17: 1.57dBi LTE B25: 1.52dBi LTE B26: 2.67dBi LTE B66: 0.5dBi LTE B71: 1.4dBi
Extreme Vol. Limits:	DC 4.5V ~ DC 5.5V (Normal: DC 5V)
Extreme Temp. Tolerance:	-10℃~55℃
Power Rating	Input: DC 5V 2A 10W
Adapter	N/A
Battery	Rated Voltage: 3.8 V Charge Limit Voltage:4.35V Capacity: 3900mAh
Hardware version number:	N/A
Software version number:	N/A

*** Note: The High Voltage DC 5.5V and Low Voltage DC 4.5V was declared by manufacturer, The EUT couldn't be operate normally with higher or lower voltage, the antenna information refer the manufacturer provide report, applicable only to the tested sample identified in the report.*

EMISSION DESIGNATOR

Mode	Emission Designator (99%OBW)
WCDMA Band2	4M17F9W
HSDPA Band2	4M17F9W
HSUPA Band2	4M16F9W
WCDMA Band4	4M17F9W
HSDPA Band4	4M16F9W
HSUPA Band4	4M18F9W
WCDMA Band5	4M17F9W
HSDPA Band5	4M19F9W
HSUPA Band5	4M17F9W

LTE Band 2	Emission Designator	Emission Designator
BW(MHz)	(99%OBW)QPSK	(99%OBW)16QAM
1.4	1M10G7D	1M11W7D
3	2M71G7D	2M70W7D
5	4M52G7D	4M51W7D
10	9M00G7D	8M98W7D
15	13M5G7D	13M5W7D
20	18M0G7D	18M0W7D
LTE Band 4	Emission Designator	Emission Designator
BW(MHz)	(99%OBW)QPSK	(99%OBW)16QAM
1.4	1M11G7D	1M11W7D
3	2M71G7D	2M71W7D
5	4M52G7D	4M51W7D
10	8M98G7D	8M97W7D
15	13M5G7D	13M5W7D
20	18M0G7D	18M0W7D
LTE Band 5	Emission Designator	Emission Designator
BW(MHz)	(99%OBW)QPSK	(99%OBW)16QAM
1.4	1M11G7D	1M11W7D
3	2M71G7D	2M71W7D
5	4M51G7D	4M51W7D
10	9M00G7D	8M98W7D
LTE Band 7	Emission Designator	Emission Designator
BW(MHz)	(99%OBW)QPSK	(99%OBW)16QAM
5	4M54G7D	4M54W7D
10	8M99G7D	9M00W7D
15	13M5G7D	13M5W7D
20	18M0G7D	18M0W7D
LTE Band 12	Emission Designator	Emission Designator
BW(MHz)	(99%OBW)QPSK	(99%OBW)16QAM
1.4	1M12G7D	1M11W7D
3	2M74G7D	2M71W7D
5	4M54G7D	4M54W7D
10	8M99G7D	9M01W7D
LTE Band 13	Emission Designator	Emission Designator
BW(MHz)	(99%OBW)QPSK	(99%OBW)16QAM
5	4M51G7D	4M52W7D
10	8M97G7D	8M96W7D

LTE Band 17	Emission Designator	Emission Designator
BW(MHz)	(99%OBW)QPSK	(99%OBW)16QAM
5	4M53G7D	4M53W7D
10	8M99G7D	8M98W7D
LTE Band 25	Emission Designator	Emission Designator
BW(MHz)	(99%OBW)QPSK	(99%OBW)16QAM
1.4	1M11G7D	1M11W7D
3	2M70G7D	2M70W7D
5	4M50G7D	4M52W7D
10	9M00G7D	8M99W7D
15	13M5G7D	13M5W7D
20	18M0G7D	18M0W7D
LTE Band 26-Part 22	Emission Designator	Emission Designator
BW(MHz)	(99%OBW)QPSK	(99%OBW)16QAM
1.4	1M10G7D	1M11W7D
3	2M70G7D	2M70W7D
5	4M51G7D	4M52W7D
10	8M97G7D	8M98W7D
15	13M5G7D	13M4W7D
LTE Band 26-Part 90	Emission Designator	Emission Designator
BW(MHz)	(99%OBW)QPSK	(99%OBW)16QAM
1.4	1M11G7D	1M11W7D
3	2M71G7D	2M71W7D
5	4M50G7D	4M51W7D
10	8M94G7D	8M95W7D
LTE Band 66	Emission Designator	Emission Designator
BW(MHz)	(99%OBW)QPSK	(99%OBW)16QAM
1.4	1M11G7D	1M11W7D
3	2M71G7D	2M71W7D
5	4M53G7D	4M51W7D
10	8M98G7D	8M97W7D
15	13M5G7D	13M4W7D
20	18M0G7D	17M9W7D
LTE Band 71	Emission Designator	Emission Designator
BW(MHz)	(99%OBW)QPSK	(99%OBW)16QAM
5	4M51G7D	4M52W7D
10	8M98G7D	8M99W7D
15	13M5G7D	13M5W7D
20	17M9G7D	17M9W7D

3 TEST CONFIGURATION OF EQUIPMENT UNDER TEST

Antenna port conducted and radiated test items were performed according to KDB 971168 D01 and ANSI C63.26 2015 Power Meas. License Digital Systems with maximum output power.

Radiated measurements were performed with rotating EUT in different three orthogonal test planes to find the maximum emission.

Radiated emissions were investigated as following frequency range:

1. 30 MHz to 10th harmonic for GSM850 and WCDMA Band V.

2. 30 MHz to 10th harmonic for WCDMA Band IV.

3. 30 MHz to 10th harmonic for GSM1900 and WCDMA Band II.

All modes and data rates and positions were investigated.

Test modes are chosen to be reported as the worst case configuration below:

	TEST MODES	
BAND	RADIATED TCS	CONDUCTED TCS
WCDMA BAND V	RMC 12.2KBPS LINK	RMC 12.2KBPS LINK
WCDMA BAND II	RMC 12.2KBPS LINK	RMC 12.2KBPS LINK
WCDMA BAND IV	RMC 12.2KBPS LINK	RMC 12.2KBPS LINK

LTE:

ITEMS	Band	Bandwidth (MHz)						Modulation		RB #			Test Channel		
		1.4	3	5	10	15	20	QPSK	16QAM	1	Half	Full	L	M	H
Max. Output Power	2	v	v	v	v	v	v	v	v	v	v	v	v	v	v
	4	v	v	v	v	v	v	v	v	v	v	v	v	v	v
	5	v	v	v	v			v	v	v	v	v	v	v	v
	7			v	v	v	v	v	v	v	v	v	v	v	v
	12	v	v	v	v			v	v	v	v	v	v	v	v
	13			v	v			v	v	v	v	v		v	
	17			v	v			v	v	v	v	v	v	v	v
	25	v	v	v	v	v	v	v	v	v	v	v	v	v	v
	26	v	v	v	v	v		v	v	v	v	v	v	v	v
	66	v	v	v	v	v	v	v	v	v	v	v	v	v	v
	71			v	v	v	v	v	v	v	v	v	v	v	v
Peak&Avera Ratio	2	v	v	v	v	v	v	v	v	v			v	v	v
	4	v	v	v	v	v	v	v	v	v			v	v	v
	5	v	v	v	v			v	v	v			v	v	v
	7			v	v	v	v	v	v	v			v	v	v
	12	v	v	v	v			v	v	v			v	v	v
	13			v	v			v	v	v				v	
	17			v	v			v	v	v			v	v	v
	25	v	v	v	v	v	v	v	v	v			v	v	v
	26	v	v	v	v	v		v	v	v			v	v	v
	66	v	v	v	v	v	v	v	v	v			v	v	v
	71			v	v	v	v	v	v	v			v	v	v
26dB&99% Bandwidth	2	v	v	v	v	v	v	v	v			v	v	v	v
	4	v	v	v	v	v	v	v	v			v	v	v	v
	5	v	v	v	v			v	v			v	v	v	v
	7			v	v	v	v	v	v			v	v	v	v
	12	v	v	v	v			v	v			v	v	v	v
	13			v	v			v	v			v		v	
	17			v	v			v	v			v	v	v	v
	25	v	v	v	v	v	v	v	v			v	v	v	v
	26	v	v	v	v	v		v	v			v	v	v	v
	66	v	v	v	v	v	v	v	v			v	v	v	v
	71			v	v	v	v	v	v			v	v	v	v
Conducted Band Edge	2	v	v	v	v	v	v	v	v			v	v		v
	4	v	v	v	v	v	v	v	v			v	v		v
	5	v	v	v	v			v	v			v	v		v
	7			v	v	v	v	v	v			v	v		v
	12	v	v	v	v			v	v			v	v		v
	13			v	v			v	v			v		v	

	17			V	V			V	V			V	V		V
	25	V	V	V	V	V	V	V	V			V	V		V
	26	V	V	V	V	V		V	V			V	V		V
	66	V	V	V	V	V	V	V	V			V	V		V
	71			V	V	V	V	V	V			V	V		V
Conducted Spurious Emission	2	V	V	V	V	V	V	V	V	V		V	V	V	V
	4	V	V	V	V	V	V	V	V	V		V	V	V	V
	5	V	V	V	V			V	V	V		V	V	V	V
	7			V	V	V	V	V	V	V		V	V	V	V
	12	V	V	V	V			V	V	V		V	V	V	V
	13			V	V			V	V	V		V		V	
	17			V	V			V	V	V		V	V	V	V
	25	V	V	V	V	V	V	V	V	V		V	V	V	V
	26	V	V	V	V	V		V	V	V		V	V	V	V
	66	V	V	V	V	V	V	V	V	V		V	V	V	V
	71			V	V	V	V	V	V	V		V	V	V	V
Frequency Stability	2				V			V				V		V	
	4				V			V				V		V	
	5				V			V				V		V	
	7				V			V				V		V	
	12				V			V				V		V	
	13				V			V				V		V	
	17				V			V				V		V	
	25				V			V				V		V	
	26				V			V				V		V	
	66				V			V				V		V	
	71				V			V				V		V	
E.R.P.& E.I.R.P.	2	V	V	V	V	V	V	V	V	V	V	V	V	V	V
	4	V	V	V	V	V	V	V	V	V	V	V	V	V	V
	5	V	V	V	V			V	V	V	V	V	V	V	V
	7			V	V	V	V	V	V	V	V	V	V	V	V
	12	V	V	V	V			V	V	V	V	V	V	V	V
	13			V	V			V	V	V	V	V		V	
	17			V	V			V	V	V	V	V	V	V	V
	25	V	V	V	V	V	V	V	V	V	V	V	V	V	V
	26	V	V	V	V	V		V	V	V	V	V	V	V	V
	66	V	V	V	V	V	V	V	V	V	V	V	V	V	V
	71			V	V	V	V	V	V	V	V	V	V	V	V
Radiated Spurious Emission	2	V	V	V	V	V	V	V		V			V	V	V
	4	V	V	V	V	V	V	V		V			V	V	V
	5	V	V	V	V			V		V			V	V	V
	7			V	V	V	V	V		V			V	V	V
	12	V	V	V	V			V		V			V	V	V

	13			V	V			V		V				V	
	17			V	V			V		V			V	V	V
	25	V	V	V	V	V	V	V		V			V	V	V
	26	V	V	V	V	V		V		V			V	V	V
	66	V	V	V	V	V	V	V		V			V	V	V
	71			V	V	V	V	V		V			V	V	V

4 MEASUREMENT INSTRUMENTS

RF Radiation Test Equipment					
Kind of Equipment	Manufacturer	Type No.	Serial No.	Last Calibration	Calibrated Until
Temperature & Humidity	SW-108	SuWei	N/A	2025.02.24	2026.02.23
Wireless Communications Test Set	R&S	CMW 500	117239	2024.09.23	2025.09.22
Pre-Amplifier(0.1M-3GHz)	EM	EM330	060665	2025.02.22	2026.02.21
Pre-Amplifier (1G-18GHz)	SKET	LNPA-01018G-45	SK2018080901	2024.09.23	2025.09.22
Pre-Amplifier(18G-40GHz)	SKET	LNPA_1840-50	SK2018101801	2025.02.22	2026.02.21
Positioning Controller	MF	MF-7802	MF-780208587	N/A	N/A
Signal Analyzer	R&S	FSV 40-N	101823	2024.09.23	2025.09.22
Switch Control Box	N/A	N/A	N/A	N/A	N/A
Filter Box	BALUN Technology	SU319E	BL-SZ1530051	N/A	N/A
Video Controller	SKET	FCS C-3	N/A	N/A	N/A
Bilog Antenna	TESEQ	CBL6111D	34678	2024.09.30	2025.09.29
Horn Antenna	SCHWARZBECK	BBHA 9120D	02014	2024.09.25	2025.09.24
Horn Antenna	A-INFOMW	LB-180400-KF	J211020657	2023.10.10	2025.10.09
Antenna Mast	MF	MFA-440H	N/A	N/A	N/A
Turn Table	MF	N/A	N/A	N/A	N/A
AC Power Source	APC	KDF-11010G	F214050035	N/A	N/A
DC Power Supply	Zhaoxin	RXN 605D	20R605D11010081	N/A	N/A
Test SW	EMC Test Software	15.2.0.339			
	EZ-EMC	Ver.STSLAB-03A1 RE			
RF Connected Test Equipment					
Kind of Equipment	Manufacturer	Type No.	Serial No.	Last Calibration	Calibrated Until
Temperature & Humidity	SW-108	SuWei	N/A	2025.02.24	2026.02.23
Wireless Communications Test Set	R&S	CMW 500	131428	2025.02.22	2026.02.21
Signal Analyzer	Agilent	N9020A	MY52440124	2025.02.22	2026.02.21
RF Automatic Test System	Maiwei	MW200-SFCB	N/A	N/A	N/A
Temperature & Humidity Test Chamber	Safety test	AG80L	171200018	2025.02.22	2026.02.21
Programmable Power Supply	Agilent	E3642A	MY40002025	2024.09.23	2025.09.22
POWER DIVIDER	eastsheep	PD-0.5/0.6-2S	N/A	2025.02.25	2026.02.24
Test SW	MTS 8200	2.0.0.0			

5 TEST ITEMS

5.1 CONDUCTED OUTPUT POWER&TRANSMITTER RADIATED POWER

TEST OVERVIEW

CONDUCTED OUTPUT POWER:
A system simulator was used to establish communication with the EUT. Its parameters were set to enforce EUT transmitting at the maximum power. The measured power in the radio frequency on the transmitter output terminals shall be reported.
TRANSMITTER RADIATED POWER (EIRP/ERP)
Determining ERP and/or EIRP from conducted RF output power measurements according to ANSI C63.26 2015 Section 5.2.5.5.
In many cases, RF output power limits are specified in terms of the ERP or the EIRP. Typically, ERP is specified when the operating frequency is less than or equal to 1 GHz and EIRP is specified when the operating frequency is greater than 1 GHz. Both are defined as the product of the power supplied to the antenna and its gain (relative to a dipole antenna in the case of ERP, and relative to an isotropic antenna in the case of EIRP); however, when working in decibels (i.e., logarithmic scale), the ERP and EIRP represent the sum of the transmit antenna gain (in dBd or dBi, respectively) and the conducted RF output power (expressed in dB relative to watts or milliwatts).
The relevant equation for determining the maximum ERP or EIRP from the measured RF output power is given in Equation (1) as follows:
(1) ERP or EIRP = PMeas + GT
ERP= EIRP-2.15
where
ERP or EIRP effective radiated power or equivalent isotropically radiated power, respectively (expressed in the same units as PMeas, e.g., dBm or dBW)
PMeas measured transmitter output power or PSD, in dBm or dBW
GT gain of the transmitting antenna, in dBd (ERP) or dBi (EIRP)
For devices utilizing multiple antennas, see 6.4 for guidance with respect to determining the effective array transmit antenna gain term to be used in the above equation.
The following equations demonstrate the mathematical relationship between ERP and EIRP:
a) ERP = EIRP − 2.15, where ERP and EIRP are expressed in consistent units.
b) EIRP = ERP + 2.15, where ERP and EIRP are expressed in consistent units.

TEST PROCEDURES

1. The transmitter output port was connected to the system simulator.

2. Set eut at maximum power through the system simulator.

3. Select lowest, middle, and highest channels for each band and different modulation.

4. Measure and record the power level from the system simulator.

TEST SETUP

TEST RESULT

Radiated Power (EIRP) for WCDMA Band 2							
Mode	Frequency (MHz)	Conduction AVG Power(dBm)	Ant Gain （dBi）	EIRP (dBm)	EIRP Limit(W)	EIRP Limit (dBm)	Conclusion
WCDMA	1852.40	22.94	1.52	24.46	2.00	33.01	PASS
	1880.00	22.88	1.52	24.40	2.00	33.01	PASS
	1907.60	23.54	1.52	25.06	2.00	33.01	PASS
HSDPA Subtest 1	1852.40	22.97	1.52	24.49	2.00	33.01	PASS
	1880.00	22.49	1.52	24.01	2.00	33.01	PASS
	1907.60	21.41	1.52	22.93	2.00	33.01	PASS
HSDPA Subtest 2	1852.40	21.03	1.52	22.55	2.00	33.01	PASS
	1880.00	23.27	1.52	24.79	2.00	33.01	PASS
	1907.60	22.77	1.52	24.29	2.00	33.01	PASS
HSDPA Subtest 3	1852.40	21.87	1.52	23.39	2.00	33.01	PASS
	1880.00	21.35	1.52	22.87	2.00	33.01	PASS
	1907.60	23.47	1.52	24.99	2.00	33.01	PASS
HSDPA Subtest 4	1852.40	22.98	1.52	24.50	2.00	33.01	PASS
	1880.00	21.46	1.52	22.98	2.00	33.01	PASS
	1907.60	21.48	1.52	23.00	2.00	33.01	PASS
HSUPA Subtest 1	1852.40	22.75	1.52	24.27	2.00	33.01	PASS
	1880.00	22.95	1.52	24.47	2.00	33.01	PASS
	1907.60	22.10	1.52	23.62	2.00	33.01	PASS
HSUPA Subtest 2	1852.40	23.13	1.52	24.65	2.00	33.01	PASS
	1880.00	22.52	1.52	24.04	2.00	33.01	PASS
	1907.60	23.17	1.52	24.69	2.00	33.01	PASS
HSUPA Subtest 3	1852.40	23.28	1.52	24.80	2.00	33.01	PASS
	1880.00	22.39	1.52	23.91	2.00	33.01	PASS
	1907.60	23.36	1.52	24.88	2.00	33.01	PASS
HSUPA Subtest 4	1852.40	22.78	1.52	24.30	2.00	33.01	PASS
	1880.00	23.25	1.52	24.77	2.00	33.01	PASS
	1907.60	23.44	1.52	24.96	2.00	33.01	PASS
HSUPA Subtest 5	1852.40	22.43	1.52	23.95	2.00	33.01	PASS
	1880.00	23.51	1.52	25.03	2.00	33.01	PASS
	1907.60	22.80	1.52	24.32	2.00	33.01	PASS

Radiated Power (EIRP) for WCDMA Band 4							
Mode	Frequency (MHz)	Conduction AVG Power(dBm)	Ant Gain（dBi）	EIRP (dBm)	EIRP Limit(W)	EIRP Limit (dBm)	Conclusion
WCDMA	1712.40	23.18	0.50	23.68	1.00	30.00	PASS
	1740.00	23.60	0.50	24.10	1.00	30.00	PASS
	1752.60	22.58	0.50	23.08	1.00	30.00	PASS
HSDPA Subtest 1	1712.40	23.07	0.50	23.57	1.00	30.00	PASS
	1740.00	22.59	0.50	23.09	1.00	30.00	PASS
	1752.60	21.32	0.50	21.82	1.00	30.00	PASS
HSDPA Subtest 2	1712.40	20.51	0.50	21.01	1.00	30.00	PASS
	1740.00	23.51	0.50	24.01	1.00	30.00	PASS
	1752.60	22.80	0.50	23.30	1.00	30.00	PASS
HSDPA Subtest 3	1712.40	21.66	0.50	22.16	1.00	30.00	PASS
	1740.00	21.14	0.50	21.64	1.00	30.00	PASS
	1752.60	22.53	0.50	23.03	1.00	30.00	PASS
HSDPA Subtest 4	1712.40	22.08	0.50	22.58	1.00	30.00	PASS
	1740.00	21.12	0.50	21.62	1.00	30.00	PASS
	1752.60	20.78	0.50	21.28	1.00	30.00	PASS
HSUPA Subtest 1	1712.40	22.82	0.50	23.32	1.00	30.00	PASS
	1740.00	22.96	0.50	23.46	1.00	30.00	PASS
	1752.60	21.92	0.50	22.42	1.00	30.00	PASS
HSUPA Subtest 2	1712.40	23.17	0.50	23.67	1.00	30.00	PASS
	1740.00	22.46	0.50	22.96	1.00	30.00	PASS
	1752.60	23.15	0.50	23.65	1.00	30.00	PASS
HSUPA Subtest 3	1712.40	23.39	0.50	23.89	1.00	30.00	PASS
	1740.00	22.31	0.50	22.81	1.00	30.00	PASS
	1752.60	23.56	0.50	24.06	1.00	30.00	PASS
HSUPA Subtest 4	1712.40	22.69	0.50	23.19	1.00	30.00	PASS
	1740.00	22.16	0.50	22.66	1.00	30.00	PASS
	1752.60	22.42	0.50	22.92	1.00	30.00	PASS
HSUPA Subtest 5	1712.40	21.38	0.50	21.88	1.00	30.00	PASS
	1740.00	22.58	0.50	23.08	1.00	30.00	PASS
	1752.60	21.74	0.50	22.24	1.00	30.00	PASS

Radiated Power (ERP) for WCDMA Band 5							
Mode	Frequency (MHz)	Conduction AVG Power(dBm)	Ant Gain（dBi）	ERP (dBm)	ERP Limit(W)	ERP Limit (dBm)	Conclusion
WCDMA	826.40	17.58	2.18	17.61	7.00	38.45	PASS
	836.40	18.02	2.18	18.05	7.00	38.45	PASS
	846.60	18.37	2.18	18.40	7.00	38.45	PASS
HSDPA Subtest 1	826.40	16.53	2.18	16.56	7.00	38.45	PASS
	836.40	15.76	2.18	15.79	7.00	38.45	PASS
	846.60	15.66	2.18	15.69	7.00	38.45	PASS
HSDPA Subtest 2	826.40	17.58	2.18	17.61	7.00	38.45	PASS
	836.40	18.27	2.18	18.30	7.00	38.45	PASS
	846.60	17.67	2.18	17.70	7.00	38.45	PASS
HSDPA Subtest 3	826.40	17.69	2.18	17.72	7.00	38.45	PASS
	836.40	17.55	2.18	17.58	7.00	38.45	PASS
	846.60	18.25	2.18	18.28	7.00	38.45	PASS
HSDPA Subtest 4	826.40	17.88	2.18	17.91	7.00	38.45	PASS
	836.40	17.26	2.18	17.29	7.00	38.45	PASS
	846.60	17.38	2.18	17.41	7.00	38.45	PASS
HSUPA Subtest 1	826.40	16.22	2.18	16.25	7.00	38.45	PASS
	836.40	16.34	2.18	16.37	7.00	38.45	PASS
	846.60	15.35	2.18	15.38	7.00	38.45	PASS
HSUPA Subtest 2	826.40	16.55	2.18	16.58	7.00	38.45	PASS
	836.40	16.95	2.18	16.98	7.00	38.45	PASS
	846.60	17.94	2.18	17.97	7.00	38.45	PASS
HSUPA Subtest 3	826.40	18.18	2.18	18.21	7.00	38.45	PASS
	836.40	17.49	2.18	17.52	7.00	38.45	PASS
	846.60	18.29	2.18	18.32	7.00	38.45	PASS
HSUPA Subtest 4	826.40	17.53	2.18	17.56	7.00	38.45	PASS
	836.40	18.34	2.18	18.37	7.00	38.45	PASS
	846.60	18.33	2.18	18.36	7.00	38.45	PASS
HSUPA Subtest 5	826.40	17.65	2.18	17.68	7.00	38.45	PASS
	836.40	18.11	2.18	18.14	7.00	38.45	PASS
	846.60	17.77	2.18	17.80	7.00	38.45	PASS

Radiated Power (EIRP) for LTE Band 2 /1.4M										
BW (MHz)	UL Channel	RB Size	RB offset	Modulation	Conduction AVG Power(dBm)	Ant Gain（dBi）	EIRP (dBm)	EIRP Limit(W)	EIRP Limit(dBm)	Verdict
1.4	Lowest	1	0	QPSK	23.40	1.52	24.92	2.00	33.01	PASS
		1	2		23.31	1.52	24.83	2.00	33.01	PASS
		1	5		23.37	1.52	24.89	2.00	33.01	PASS
		3	0		23.30	1.52	24.82	2.00	33.01	PASS
		3	1		23.32	1.52	24.84	2.00	33.01	PASS
		3	2		23.40	1.52	24.92	2.00	33.01	PASS
		6	0		22.53	1.52	24.05	2.00	33.01	PASS
		1	0	16QAM	22.39	1.52	23.91	2.00	33.01	PASS
		1	2		22.39	1.52	23.91	2.00	33.01	PASS
		1	5		22.49	1.52	24.01	2.00	33.01	PASS
		3	0		22.50	1.52	24.02	2.00	33.01	PASS
		3	1		22.51	1.52	24.03	2.00	33.01	PASS
		3	2		22.57	1.52	24.09	2.00	33.01	PASS
		6	0		21.68	1.52	23.20	2.00	33.01	PASS
	Middle	1	0	QPSK	23.98	1.52	25.50	2.00	33.01	PASS
		1	2		23.95	1.52	25.47	2.00	33.01	PASS
		1	5		23.98	1.52	25.50	2.00	33.01	PASS
		3	0		23.98	1.52	25.50	2.00	33.01	PASS
		3	1		23.99	1.52	25.51	2.00	33.01	PASS
		3	2		23.99	1.52	25.51	2.00	33.01	PASS
		6	0		23.13	1.52	24.65	2.00	33.01	PASS
		1	0	16QAM	23.14	1.52	24.66	2.00	33.01	PASS
		1	2		23.14	1.52	24.66	2.00	33.01	PASS
		1	5		23.15	1.52	24.67	2.00	33.01	PASS
		3	0		23.21	1.52	24.73	2.00	33.01	PASS
		3	1		23.21	1.52	24.73	2.00	33.01	PASS
		3	2		23.20	1.52	24.72	2.00	33.01	PASS
		6	0		22.39	1.52	23.91	2.00	33.01	PASS
	Highest	1	0	QPSK	23.80	1.52	25.32	2.00	33.01	PASS
		1	2		23.75	1.52	25.27	2.00	33.01	PASS
		1	5		23.87	1.52	25.39	2.00	33.01	PASS
		3	0		23.87	1.52	25.39	2.00	33.01	PASS
		3	1		23.90	1.52	25.42	2.00	33.01	PASS
		3	2		23.92	1.52	25.44	2.00	33.01	PASS
		6	0		23.09	1.52	24.61	2.00	33.01	PASS
		1	0	16QAM	23.23	1.52	24.75	2.00	33.01	PASS
		1	2		23.18	1.52	24.70	2.00	33.01	PASS
		1	5		23.32	1.52	24.84	2.00	33.01	PASS
		3	0		23.16	1.52	24.68	2.00	33.01	PASS
		3	1		23.20	1.52	24.72	2.00	33.01	PASS
		3	2		23.23	1.52	24.75	2.00	33.01	PASS
		6	0		22.24	1.52	23.76	2.00	33.01	PASS

Radiated Power (EIRP) for LTE Band 2 /3M										
BW (MHz)	UL Channel	RB Size	RB offset	Modulation	Conduction AVG Power(dBm)	Ant Gain（dBi）	EIRP (dBm)	EIRP Limit(W)	EIRP Limit(dBm)	Verdict
3	Lowest	1	0	QPSK	23.23	1.52	24.75	2.00	33.01	PASS
		1	7		23.35	1.52	24.87	2.00	33.01	PASS
		1	14		23.39	1.52	24.91	2.00	33.01	PASS
		8	0		22.48	1.52	24.00	2.00	33.01	PASS
		8	4		22.58	1.52	24.10	2.00	33.01	PASS
		8	7		22.57	1.52	24.09	2.00	33.01	PASS
		15	0		22.57	1.52	24.09	2.00	33.01	PASS
		1	0	16QAM	22.50	1.52	24.02	2.00	33.01	PASS
		1	7		22.68	1.52	24.20	2.00	33.01	PASS
		1	14		22.74	1.52	24.26	2.00	33.01	PASS
		8	0		21.60	1.52	23.12	2.00	33.01	PASS
		8	4		21.72	1.52	23.24	2.00	33.01	PASS
		8	7		21.76	1.52	23.28	2.00	33.01	PASS
		15	0		21.55	1.52	23.07	2.00	33.01	PASS
	Middle	1	0	QPSK	23.71	1.52	25.23	2.00	33.01	PASS
		1	7		23.96	1.52	25.48	2.00	33.01	PASS
		1	14		23.85	1.52	25.37	2.00	33.01	PASS
		8	0		23.14	1.52	24.66	2.00	33.01	PASS
		8	4		23.19	1.52	24.71	2.00	33.01	PASS
		8	7		23.16	1.52	24.68	2.00	33.01	PASS
		15	0		23.13	1.52	24.65	2.00	33.01	PASS
		1	0	16QAM	22.94	1.52	24.46	2.00	33.01	PASS
		1	7		23.14	1.52	24.66	2.00	33.01	PASS
		1	14		23.05	1.52	24.57	2.00	33.01	PASS
		8	0		22.18	1.52	23.70	2.00	33.01	PASS
		8	4		22.28	1.52	23.80	2.00	33.01	PASS
		8	7		22.26	1.52	23.78	2.00	33.01	PASS
		15	0		22.06	1.52	23.58	2.00	33.01	PASS
	Highest	1	0	QPSK	23.42	1.52	24.94	2.00	33.01	PASS
		1	7		23.66	1.52	25.18	2.00	33.01	PASS
		1	14		23.77	1.52	25.29	2.00	33.01	PASS
		8	0		22.76	1.52	24.28	2.00	33.01	PASS
		8	4		22.88	1.52	24.40	2.00	33.01	PASS
		8	7		23.01	1.52	24.53	2.00	33.01	PASS
		15	0		22.87	1.52	24.39	2.00	33.01	PASS
		1	0	16QAM	22.79	1.52	24.31	2.00	33.01	PASS
		1	7		23.04	1.52	24.56	2.00	33.01	PASS
		1	14		23.20	1.52	24.72	2.00	33.01	PASS
		8	0		21.77	1.52	23.29	2.00	33.01	PASS
		8	4		21.89	1.52	23.41	2.00	33.01	PASS
		8	7		22.04	1.52	23.56	2.00	33.01	PASS
		15	0		22.00	1.52	23.52	2.00	33.01	PASS

Radiated Power (EIRP) for LTE Band 2 /5M										
BW (MHz)	UL Channel	RB Size	RB offset	Modulation	Conduction AVG Power(dBm)	Ant Gain（dBi）	EIRP (dBm)	EIRP Limit(W)	EIRP Limit(dBm)	Verdict
5	Lowest	1	0	QPSK	23.12	1.52	24.64	2.00	33.01	PASS
		1	12		23.39	1.52	24.91	2.00	33.01	PASS
		1	24		23.44	1.52	24.96	2.00	33.01	PASS
		12	0		22.49	1.52	24.01	2.00	33.01	PASS
		12	6		22.63	1.52	24.15	2.00	33.01	PASS
		12	11		22.71	1.52	24.23	2.00	33.01	PASS
		25	0		22.59	1.52	24.11	2.00	33.01	PASS
		1	0	16QAM	22.63	1.52	24.15	2.00	33.01	PASS
		1	12		22.86	1.52	24.38	2.00	33.01	PASS
		1	24		22.97	1.52	24.49	2.00	33.01	PASS
		12	0		21.57	1.52	23.09	2.00	33.01	PASS
		12	6		21.76	1.52	23.28	2.00	33.01	PASS
		12	11		21.79	1.52	23.31	2.00	33.01	PASS
		25	0		21.64	1.52	23.16	2.00	33.01	PASS
	Middle	1	0	QPSK	23.70	1.52	25.22	2.00	33.01	PASS
		1	12		23.98	1.52	25.50	2.00	33.01	PASS
		1	24		23.74	1.52	25.26	2.00	33.01	PASS
		12	0		22.99	1.52	24.51	2.00	33.01	PASS
		12	6		23.16	1.52	24.68	2.00	33.01	PASS
		12	11		23.11	1.52	24.63	2.00	33.01	PASS
		25	0		23.07	1.52	24.59	2.00	33.01	PASS
		1	0	16QAM	22.94	1.52	24.46	2.00	33.01	PASS
		1	12		23.25	1.52	24.77	2.00	33.01	PASS
		1	24		23.00	1.52	24.52	2.00	33.01	PASS
		12	0		22.13	1.52	23.65	2.00	33.01	PASS
		12	6		22.30	1.52	23.82	2.00	33.01	PASS
		12	11		22.24	1.52	23.76	2.00	33.01	PASS
		25	0		22.08	1.52	23.60	2.00	33.01	PASS
	Highest	1	0	QPSK	23.26	1.52	24.78	2.00	33.01	PASS
		1	12		23.50	1.52	25.02	2.00	33.01	PASS
		1	24		23.77	1.52	25.29	2.00	33.01	PASS
		12	0		22.39	1.52	23.91	2.00	33.01	PASS
		12	6		22.67	1.52	24.19	2.00	33.01	PASS
		12	11		22.86	1.52	24.38	2.00	33.01	PASS
		25	0		22.67	1.52	24.19	2.00	33.01	PASS
		1	0	16QAM	22.44	1.52	23.96	2.00	33.01	PASS
		1	12		22.78	1.52	24.30	2.00	33.01	PASS
		1	24		23.09	1.52	24.61	2.00	33.01	PASS
		12	0		21.54	1.52	23.06	2.00	33.01	PASS
		12	6		21.84	1.52	23.36	2.00	33.01	PASS
		12	11		22.01	1.52	23.53	2.00	33.01	PASS
		25	0		21.70	1.52	23.22	2.00	33.01	PASS

Radiated Power (EIRP) for LTE Band 2 /10M										
BW (MHz)	UL Channel	RB Size	RB offset	Modulation	Conduction AVG Power(dBm)	Ant Gain（dBi）	EIRP (dBm)	EIRP Limit(W)	EIRP Limit(dBm)	Verdict
10	Lowest	1	0	QPSK	22.93	1.52	24.45	2.00	33.01	PASS
		1	24		23.44	1.52	24.96	2.00	33.01	PASS
		1	49		23.53	1.52	25.05	2.00	33.01	PASS
		25	0		22.42	1.52	23.94	2.00	33.01	PASS
		25	12		22.78	1.52	24.30	2.00	33.01	PASS
		25	24		22.83	1.52	24.35	2.00	33.01	PASS
		50	0		22.67	1.52	24.19	2.00	33.01	PASS
		1	0	16QAM	22.25	1.52	23.77	2.00	33.01	PASS
		1	24		22.80	1.52	24.32	2.00	33.01	PASS
		1	49		22.87	1.52	24.39	2.00	33.01	PASS
		25	0		21.51	1.52	23.03	2.00	33.01	PASS
		25	12		21.89	1.52	23.41	2.00	33.01	PASS
		25	24		21.97	1.52	23.49	2.00	33.01	PASS
		50	0		21.73	1.52	23.25	2.00	33.01	PASS
	Middle	1	0	QPSK	23.30	1.52	24.82	2.00	33.01	PASS
		1	24		23.87	1.52	25.39	2.00	33.01	PASS
		1	49		23.45	1.52	24.97	2.00	33.01	PASS
		25	0		22.63	1.52	24.15	2.00	33.01	PASS
		25	12		22.97	1.52	24.49	2.00	33.01	PASS
		25	24		22.84	1.52	24.36	2.00	33.01	PASS
		50	0		22.85	1.52	24.37	2.00	33.01	PASS
		1	0	16QAM	22.45	1.52	23.97	2.00	33.01	PASS
		1	24		23.03	1.52	24.55	2.00	33.01	PASS
		1	49		22.66	1.52	24.18	2.00	33.01	PASS
		25	0		21.68	1.52	23.20	2.00	33.01	PASS
		25	12		22.03	1.52	23.55	2.00	33.01	PASS
		25	24		21.89	1.52	23.41	2.00	33.01	PASS
		50	0		21.92	1.52	23.44	2.00	33.01	PASS
	Highest	1	0	QPSK	23.01	1.52	24.53	2.00	33.01	PASS
		1	24		23.16	1.52	24.68	2.00	33.01	PASS
		1	49		23.48	1.52	25.00	2.00	33.01	PASS
		25	0		22.05	1.52	23.57	2.00	33.01	PASS
		25	12		22.23	1.52	23.75	2.00	33.01	PASS
		25	24		22.40	1.52	23.92	2.00	33.01	PASS
		50	0		22.23	1.52	23.75	2.00	33.01	PASS
		1	0	16QAM	22.37	1.52	23.89	2.00	33.01	PASS
		1	24		22.52	1.52	24.04	2.00	33.01	PASS
		1	49		22.87	1.52	24.39	2.00	33.01	PASS
		25	0		21.05	1.52	22.57	2.00	33.01	PASS
		25	12		21.22	1.52	22.74	2.00	33.01	PASS
		25	24		21.44	1.52	22.96	2.00	33.01	PASS
		50	0		21.25	1.52	22.77	2.00	33.01	PASS

Radiated Power (EIRP) for LTE Band 2 /15M										
BW (MHz)	UL Channel	RB Size	RB offset	Modulation	Conduction AVG Power(dBm)	Ant Gain（dBi）	EIRP (dBm)	EIRP Limit(W)	EIRP Limit(dBm)	Verdict
15	Lowest	1	0	QPSK	23.10	1.52	24.62	2.00	33.01	PASS
		1	37		23.71	1.52	25.23	2.00	33.01	PASS
		1	74		23.81	1.52	25.33	2.00	33.01	PASS
		36	0		22.73	1.52	24.25	2.00	33.01	PASS
		36	18		23.05	1.52	24.57	2.00	33.01	PASS
		36	39		23.22	1.52	24.74	2.00	33.01	PASS
		75	0		22.97	1.52	24.49	2.00	33.01	PASS
		1	0	16QAM	22.41	1.52	23.93	2.00	33.01	PASS
		1	37		23.04	1.52	24.56	2.00	33.01	PASS
		1	74		23.18	1.52	24.70	2.00	33.01	PASS
		36	0		21.79	1.52	23.31	2.00	33.01	PASS
		36	18		22.14	1.52	23.66	2.00	33.01	PASS
		36	39		22.26	1.52	23.78	2.00	33.01	PASS
		75	0		22.04	1.52	23.56	2.00	33.01	PASS
	Middle	1	0	QPSK	23.47	1.52	24.99	2.00	33.01	PASS
		1	37		23.94	1.52	25.46	2.00	33.01	PASS
		1	74		23.77	1.52	25.29	2.00	33.01	PASS
		36	0		22.74	1.52	24.26	2.00	33.01	PASS
		36	18		23.11	1.52	24.63	2.00	33.01	PASS
		36	39		23.02	1.52	24.54	2.00	33.01	PASS
		75	0		23.09	1.52	24.61	2.00	33.01	PASS
		1	0	16QAM	22.69	1.52	24.21	2.00	33.01	PASS
		1	37		23.13	1.52	24.65	2.00	33.01	PASS
		1	74		22.98	1.52	24.50	2.00	33.01	PASS
		36	0		21.80	1.52	23.32	2.00	33.01	PASS
		36	18		22.17	1.52	23.69	2.00	33.01	PASS
		36	39		22.08	1.52	23.60	2.00	33.01	PASS
		75	0		22.12	1.52	23.64	2.00	33.01	PASS
	Highest	1	0	QPSK	23.96	1.52	25.48	2.00	33.01	PASS
		1	37		23.30	1.52	24.82	2.00	33.01	PASS
		1	74		23.81	1.52	25.33	2.00	33.01	PASS
		36	0		22.83	1.52	24.35	2.00	33.01	PASS
		36	18		22.44	1.52	23.96	2.00	33.01	PASS
		36	39		22.54	1.52	24.06	2.00	33.01	PASS
		75	0		22.63	1.52	24.15	2.00	33.01	PASS
		1	0	16QAM	23.00	1.52	24.52	2.00	33.01	PASS
		1	37		22.43	1.52	23.95	2.00	33.01	PASS
		1	74		22.86	1.52	24.38	2.00	33.01	PASS
		36	0		21.82	1.52	23.34	2.00	33.01	PASS
		36	18		21.47	1.52	22.99	2.00	33.01	PASS
		36	39		21.47	1.52	22.99	2.00	33.01	PASS
		75	0		21.62	1.52	23.14	2.00	33.01	PASS

Radiated Power (EIRP) for LTE Band 2 /20M										
BW (MHz)	UL Channel	RB Size	RB offset	Modulation	Conduction AVG Power(dBm)	Ant Gain（dBi）	EIRP (dBm)	EIRP Limit(W)	EIRP Limit(dBm)	Verdict
20	Lowest	1	0	QPSK	23.03	1.52	24.55	2.00	33.01	PASS
		1	49		23.80	1.52	25.32	2.00	33.01	PASS
		1	99		23.39	1.52	24.91	2.00	33.01	PASS
		50	0		22.85	1.52	24.37	2.00	33.01	PASS
		50	24		23.29	1.52	24.81	2.00	33.01	PASS
		50	49		23.10	1.52	24.62	2.00	33.01	PASS
		100	0		23.09	1.52	24.61	2.00	33.01	PASS
		1	0	16QAM	22.34	1.52	23.86	2.00	33.01	PASS
		1	49		23.12	1.52	24.64	2.00	33.01	PASS
		1	99		22.70	1.52	24.22	2.00	33.01	PASS
		50	0		21.92	1.52	23.44	2.00	33.01	PASS
		50	24		22.37	1.52	23.89	2.00	33.01	PASS
		50	49		22.09	1.52	23.61	2.00	33.01	PASS
		100	0		22.16	1.52	23.68	2.00	33.01	PASS
	Middle	1	0	QPSK	23.33	1.52	24.85	2.00	33.01	PASS
		1	49		24.01	1.52	25.53	2.00	33.01	PASS
		1	99		23.86	1.52	25.38	2.00	33.01	PASS
		50	0		22.69	1.52	24.21	2.00	33.01	PASS
		50	24		23.11	1.52	24.63	2.00	33.01	PASS
		50	49		23.06	1.52	24.58	2.00	33.01	PASS
		100	0		23.13	1.52	24.65	2.00	33.01	PASS
		1	0	16QAM	22.50	1.52	24.02	2.00	33.01	PASS
		1	49		23.12	1.52	24.64	2.00	33.01	PASS
		1	99		23.04	1.52	24.56	2.00	33.01	PASS
		50	0		21.68	1.52	23.20	2.00	33.01	PASS
		50	24		22.16	1.52	23.68	2.00	33.01	PASS
		50	49		22.07	1.52	23.59	2.00	33.01	PASS
		100	0		22.19	1.52	23.71	2.00	33.01	PASS
	Highest	1	0	QPSK	23.83	1.52	25.35	2.00	33.01	PASS
		1	49		23.42	1.52	24.94	2.00	33.01	PASS
		1	99		23.51	1.52	25.03	2.00	33.01	PASS
		50	0		23.14	1.52	24.66	2.00	33.01	PASS
		50	24		22.64	1.52	24.16	2.00	33.01	PASS
		50	49		22.34	1.52	23.86	2.00	33.01	PASS
		100	0		22.57	1.52	24.09	2.00	33.01	PASS
		1	0	16QAM	23.09	1.52	24.61	2.00	33.01	PASS
		1	49		22.59	1.52	24.11	2.00	33.01	PASS
		1	99		22.72	1.52	24.24	2.00	33.01	PASS
		50	0		22.23	1.52	23.75	2.00	33.01	PASS
		50	24		21.65	1.52	23.17	2.00	33.01	PASS
		50	49		21.43	1.52	22.95	2.00	33.01	PASS
		100	0		21.56	1.52	23.08	2.00	33.01	PASS

Radiated Power (EIRP) for LTE Band 4 /1.4M										
BW (MHz)	UL Channel	RB Size	RB offset	Modulation	Conduction AVG Power(dBm)	Ant Gain（dBi）	EIRP (dBm)	EIRP Limit(W)	EIRP Limit(dBm)	Verdict
1.4	Lowest	1	0	QPSK	24.21	0.5	24.71	1.00	30.00	PASS
		1	2		24.13	0.5	24.63	1.00	30.00	PASS
		1	5		24.17	0.5	24.67	1.00	30.00	PASS
		3	0		24.17	0.5	24.67	1.00	30.00	PASS
		3	1		24.26	0.5	24.76	1.00	30.00	PASS
		3	2		24.28	0.5	24.78	1.00	30.00	PASS
		6	0		23.45	0.5	23.95	1.00	30.00	PASS
		1	0	16QAM	23.26	0.5	23.76	1.00	30.00	PASS
		1	2		23.26	0.5	23.76	1.00	30.00	PASS
		1	5		23.33	0.5	23.83	1.00	30.00	PASS
		3	0		23.38	0.5	23.88	1.00	30.00	PASS
		3	1		23.39	0.5	23.89	1.00	30.00	PASS
		3	2		23.41	0.5	23.91	1.00	30.00	PASS
		6	0		22.85	0.5	23.35	1.00	30.00	PASS
	Middle	1	0	QPSK	24.31	0.5	24.81	1.00	30.00	PASS
		1	2		24.24	0.5	24.74	1.00	30.00	PASS
		1	5		24.34	0.5	24.84	1.00	30.00	PASS
		3	0		24.27	0.5	24.77	1.00	30.00	PASS
		3	1		24.33	0.5	24.83	1.00	30.00	PASS
		3	2		24.35	0.5	24.85	1.00	30.00	PASS
		6	0		23.54	0.5	24.04	1.00	30.00	PASS
		1	0	16QAM	23.70	0.5	24.20	1.00	30.00	PASS
		1	2		23.68	0.5	24.18	1.00	30.00	PASS
		1	5		23.76	0.5	24.26	1.00	30.00	PASS
		3	0		23.67	0.5	24.17	1.00	30.00	PASS
		3	1		23.67	0.5	24.17	1.00	30.00	PASS
		3	2		23.68	0.5	24.18	1.00	30.00	PASS
		6	0		22.88	0.5	23.38	1.00	30.00	PASS
	Highest	1	0	QPSK	23.77	0.5	24.27	1.00	30.00	PASS
		1	2		23.68	0.5	24.18	1.00	30.00	PASS
		1	5		23.79	0.5	24.29	1.00	30.00	PASS
		3	0		23.79	0.5	24.29	1.00	30.00	PASS
		3	1		23.78	0.5	24.28	1.00	30.00	PASS
		3	2		23.73	0.5	24.23	1.00	30.00	PASS
		6	0		22.99	0.5	23.49	1.00	30.00	PASS
		1	0	16QAM	23.01	0.5	23.51	1.00	30.00	PASS
		1	2		22.89	0.5	23.39	1.00	30.00	PASS
		1	5		22.98	0.5	23.48	1.00	30.00	PASS
		3	0		23.04	0.5	23.54	1.00	30.00	PASS
		3	1		23.04	0.5	23.54	1.00	30.00	PASS
		3	2		22.99	0.5	23.49	1.00	30.00	PASS
		6	0		22.37	0.5	22.87	1.00	30.00	PASS

Radiated Power (EIRP) for LTE Band 4 /3M										
BW (MHz)	UL Channel	RB Size	RB offset	Modulation	Conduction AVG Power(dBm)	Ant Gain（dBi）	EIRP (dBm)	EIRP Limit(W)	EIRP Limit(dBm)	Verdict
3	Lowest	1	0	QPSK	24.05	0.5	24.55	1.00	30.00	PASS
		1	7		24.16	0.5	24.66	1.00	30.00	PASS
		1	14		24.16	0.5	24.66	1.00	30.00	PASS
		8	0		23.50	0.5	24.00	1.00	30.00	PASS
		8	4		23.48	0.5	23.98	1.00	30.00	PASS
		8	7		23.51	0.5	24.01	1.00	30.00	PASS
		15	0		23.47	0.5	23.97	1.00	30.00	PASS
		1	0	16QAM	23.35	0.5	23.85	1.00	30.00	PASS
		1	7		23.48	0.5	23.98	1.00	30.00	PASS
		1	14		23.55	0.5	24.05	1.00	30.00	PASS
		8	0		22.81	0.5	23.31	1.00	30.00	PASS
		8	4		22.83	0.5	23.33	1.00	30.00	PASS
		8	7		22.86	0.5	23.36	1.00	30.00	PASS
		15	0		22.72	0.5	23.22	1.00	30.00	PASS
	Middle	1	0	QPSK	24.26	0.5	24.76	1.00	30.00	PASS
		1	7		24.33	0.5	24.83	1.00	30.00	PASS
		1	14		24.30	0.5	24.80	1.00	30.00	PASS
		8	0		23.62	0.5	24.12	1.00	30.00	PASS
		8	4		23.58	0.5	24.08	1.00	30.00	PASS
		8	7		23.62	0.5	24.12	1.00	30.00	PASS
		15	0		23.55	0.5	24.05	1.00	30.00	PASS
		1	0	16QAM	23.43	0.5	23.93	1.00	30.00	PASS
		1	7		23.45	0.5	23.95	1.00	30.00	PASS
		1	14		23.48	0.5	23.98	1.00	30.00	PASS
		8	0		22.89	0.5	23.39	1.00	30.00	PASS
		8	4		22.95	0.5	23.45	1.00	30.00	PASS
		8	7		22.89	0.5	23.39	1.00	30.00	PASS
		15	0		22.66	0.5	23.16	1.00	30.00	PASS
	Highest	1	0	QPSK	23.78	0.5	24.28	1.00	30.00	PASS
		1	7		23.76	0.5	24.26	1.00	30.00	PASS
		1	14		23.69	0.5	24.19	1.00	30.00	PASS
		8	0		23.08	0.5	23.58	1.00	30.00	PASS
		8	4		23.05	0.5	23.55	1.00	30.00	PASS
		8	7		23.00	0.5	23.50	1.00	30.00	PASS
		15	0		23.02	0.5	23.52	1.00	30.00	PASS
		1	0	16QAM	23.23	0.5	23.73	1.00	30.00	PASS
		1	7		23.24	0.5	23.74	1.00	30.00	PASS
		1	14		23.16	0.5	23.66	1.00	30.00	PASS
		8	0		22.29	0.5	22.79	1.00	30.00	PASS
		8	4		22.27	0.5	22.77	1.00	30.00	PASS
		8	7		22.23	0.5	22.73	1.00	30.00	PASS
		15	0		22.35	0.5	22.85	1.00	30.00	PASS

Radiated Power (EIRP) for LTE Band 4 /5M										
BW (MHz)	UL Channel	RB Size	RB offset	Modulation	Conduction AVG Power(dBm)	Ant Gain（dBi）	EIRP (dBm)	EIRP Limit(W)	EIRP Limit(dBm)	Verdict
5	Lowest	1	0	QPSK	23.97	0.5	24.47	1.00	30.00	PASS
		1	12		24.18	0.5	24.68	1.00	30.00	PASS
		1	24		24.13	0.5	24.63	1.00	30.00	PASS
		12	0		23.51	0.5	24.01	1.00	30.00	PASS
		12	6		23.64	0.5	24.14	1.00	30.00	PASS
		12	11		23.52	0.5	24.02	1.00	30.00	PASS
		25	0		23.47	0.5	23.97	1.00	30.00	PASS
		1	0	16QAM	23.49	0.5	23.99	1.00	30.00	PASS
		1	12		23.70	0.5	24.20	1.00	30.00	PASS
		1	24		23.64	0.5	24.14	1.00	30.00	PASS
		12	0		22.70	0.5	23.20	1.00	30.00	PASS
		12	6		22.85	0.5	23.35	1.00	30.00	PASS
		12	11		22.74	0.5	23.24	1.00	30.00	PASS
		25	0		22.81	0.5	23.31	1.00	30.00	PASS
	Middle	1	0	QPSK	24.12	0.5	24.62	1.00	30.00	PASS
		1	12		24.36	0.5	24.86	1.00	30.00	PASS
		1	24		24.33	0.5	24.83	1.00	30.00	PASS
		12	0		23.54	0.5	24.04	1.00	30.00	PASS
		12	6		23.64	0.5	24.14	1.00	30.00	PASS
		12	11		23.59	0.5	24.09	1.00	30.00	PASS
		25	0		23.59	0.5	24.09	1.00	30.00	PASS
		1	0	16QAM	23.45	0.5	23.95	1.00	30.00	PASS
		1	12		23.62	0.5	24.12	1.00	30.00	PASS
		1	24		23.63	0.5	24.13	1.00	30.00	PASS
		12	0		22.85	0.5	23.35	1.00	30.00	PASS
		12	6		23.00	0.5	23.50	1.00	30.00	PASS
		12	11		22.99	0.5	23.49	1.00	30.00	PASS
		25	0		22.78	0.5	23.28	1.00	30.00	PASS
	Highest	1	0	QPSK	23.97	0.5	24.47	1.00	30.00	PASS
		1	12		23.89	0.5	24.39	1.00	30.00	PASS
		1	24		23.79	0.5	24.29	1.00	30.00	PASS
		12	0		23.24	0.5	23.74	1.00	30.00	PASS
		12	6		23.20	0.5	23.70	1.00	30.00	PASS
		12	11		23.00	0.5	23.50	1.00	30.00	PASS
		25	0		23.15	0.5	23.65	1.00	30.00	PASS
		1	0	16QAM	23.34	0.5	23.84	1.00	30.00	PASS
		1	12		23.25	0.5	23.75	1.00	30.00	PASS
		1	24		23.14	0.5	23.64	1.00	30.00	PASS
		12	0		22.43	0.5	22.93	1.00	30.00	PASS
		12	6		22.40	0.5	22.90	1.00	30.00	PASS
		12	11		22.39	0.5	22.89	1.00	30.00	PASS
		25	0		22.23	0.5	22.73	1.00	30.00	PASS

Radiated Power (EIRP) for LTE Band 4 /10M										
BW (MHz)	UL Channel	RB Size	RB offset	Modulation	Conduction AVG Power(dBm)	Ant Gain（dBi）	EIRP (dBm)	EIRP Limit(W)	EIRP Limit(dBm)	Verdict
10	Lowest	1	0	QPSK	23.87	0.5	24.37	1.00	30.00	PASS
		1	24		24.10	0.5	24.60	1.00	30.00	PASS
		1	49		23.57	0.5	24.07	1.00	30.00	PASS
		25	0		23.32	0.5	23.82	1.00	30.00	PASS
		25	12		23.38	0.5	23.88	1.00	30.00	PASS
		25	24		23.11	0.5	23.61	1.00	30.00	PASS
		50	0		23.21	0.5	23.71	1.00	30.00	PASS
		1	0	16QAM	23.17	0.5	23.67	1.00	30.00	PASS
		1	24		23.45	0.5	23.95	1.00	30.00	PASS
		1	49		22.90	0.5	23.40	1.00	30.00	PASS
		25	0		22.64	0.5	23.14	1.00	30.00	PASS
		25	12		22.67	0.5	23.17	1.00	30.00	PASS
		25	24		22.37	0.5	22.87	1.00	30.00	PASS
		50	0		22.44	0.5	22.94	1.00	30.00	PASS
	Middle	1	0	QPSK	23.75	0.5	24.25	1.00	30.00	PASS
		1	24		24.23	0.5	24.73	1.00	30.00	PASS
		1	49		24.15	0.5	24.65	1.00	30.00	PASS
		25	0		23.32	0.5	23.82	1.00	30.00	PASS
		25	12		23.47	0.5	23.97	1.00	30.00	PASS
		25	24		23.39	0.5	23.89	1.00	30.00	PASS
		50	0		23.34	0.5	23.84	1.00	30.00	PASS
		1	0	16QAM	22.94	0.5	23.44	1.00	30.00	PASS
		1	24		23.41	0.5	23.91	1.00	30.00	PASS
		1	49		23.27	0.5	23.77	1.00	30.00	PASS
		25	0		22.51	0.5	23.01	1.00	30.00	PASS
		25	12		22.77	0.5	23.27	1.00	30.00	PASS
		25	24		22.68	0.5	23.18	1.00	30.00	PASS
		50	0		22.66	0.5	23.16	1.00	30.00	PASS
	Highest	1	0	QPSK	23.93	0.5	24.43	1.00	30.00	PASS
		1	24		23.94	0.5	24.44	1.00	30.00	PASS
		1	49		23.47	0.5	23.97	1.00	30.00	PASS
		25	0		23.34	0.5	23.84	1.00	30.00	PASS
		25	12		23.25	0.5	23.75	1.00	30.00	PASS
		25	24		22.93	0.5	23.43	1.00	30.00	PASS
		50	0		23.07	0.5	23.57	1.00	30.00	PASS
		1	0	16QAM	23.43	0.5	23.93	1.00	30.00	PASS
		1	24		23.44	0.5	23.94	1.00	30.00	PASS
		1	49		22.95	0.5	23.45	1.00	30.00	PASS
		25	0		22.37	0.5	22.87	1.00	30.00	PASS
		25	12		22.33	0.5	22.83	1.00	30.00	PASS
		25	24		22.01	0.5	22.51	1.00	30.00	PASS
		50	0		22.07	0.5	22.57	1.00	30.00	PASS

Radiated Power (EIRP) for LTE Band 4 /15M										
BW (MHz)	UL Channel	RB Size	RB offset	Modulation	Conduction AVG Power(dBm)	Ant Gain（dBi）	EIRP (dBm)	EIRP Limit(W)	EIRP Limit(dBm)	Verdict
15	Lowest	1	0	QPSK	24.08	0.5	24.58	1.00	30.00	PASS
		1	37		24.05	0.5	24.55	1.00	30.00	PASS
		1	74		23.82	0.5	24.32	1.00	30.00	PASS
		36	0		23.39	0.5	23.89	1.00	30.00	PASS
		36	18		23.34	0.5	23.84	1.00	30.00	PASS
		36	39		22.96	0.5	23.46	1.00	30.00	PASS
		75	0		23.16	0.5	23.66	1.00	30.00	PASS
		1	0	16QAM	23.37	0.5	23.87	1.00	30.00	PASS
		1	37		23.41	0.5	23.91	1.00	30.00	PASS
		1	74		23.12	0.5	23.62	1.00	30.00	PASS
		36	0		22.71	0.5	23.21	1.00	30.00	PASS
		36	18		22.55	0.5	23.05	1.00	30.00	PASS
		36	39		22.20	0.5	22.70	1.00	30.00	PASS
		75	0		22.40	0.5	22.90	1.00	30.00	PASS
	Middle	1	0	QPSK	23.78	0.5	24.28	1.00	30.00	PASS
		1	37		24.34	0.5	24.84	1.00	30.00	PASS
		1	74		24.32	0.5	24.82	1.00	30.00	PASS
		36	0		23.48	0.5	23.98	1.00	30.00	PASS
		36	18		23.60	0.5	24.10	1.00	30.00	PASS
		36	39		23.65	0.5	24.15	1.00	30.00	PASS
		75	0		23.58	0.5	24.08	1.00	30.00	PASS
		1	0	16QAM	23.02	0.5	23.52	1.00	30.00	PASS
		1	37		23.54	0.5	24.04	1.00	30.00	PASS
		1	74		23.57	0.5	24.07	1.00	30.00	PASS
		36	0		22.72	0.5	23.22	1.00	30.00	PASS
		36	18		22.93	0.5	23.43	1.00	30.00	PASS
		36	39		22.96	0.5	23.46	1.00	30.00	PASS
		75	0		22.79	0.5	23.29	1.00	30.00	PASS
	Highest	1	0	QPSK	24.48	0.5	24.98	1.00	30.00	PASS
		1	37		24.39	0.5	24.89	1.00	30.00	PASS
		1	74		23.78	0.5	24.28	1.00	30.00	PASS
		36	0		23.65	0.5	24.15	1.00	30.00	PASS
		36	18		23.66	0.5	24.16	1.00	30.00	PASS
		36	39		23.26	0.5	23.76	1.00	30.00	PASS
		75	0		23.48	0.5	23.98	1.00	30.00	PASS
		1	0	16QAM	23.55	0.5	24.05	1.00	30.00	PASS
		1	37		23.49	0.5	23.99	1.00	30.00	PASS
		1	74		22.94	0.5	23.44	1.00	30.00	PASS
		36	0		22.89	0.5	23.39	1.00	30.00	PASS
		36	18		22.64	0.5	23.14	1.00	30.00	PASS
		36	39		22.23	0.5	22.73	1.00	30.00	PASS
		75	0		22.49	0.5	22.99	1.00	30.00	PASS

Radiated Power (EIRP) for LTE Band 4 /20M										
BW (MHz)	UL Channel	RB Size	RB offset	Modulation	Conduction AVG Power(dBm)	Ant Gain（dBi）	EIRP (dBm)	EIRP Limit(W)	EIRP Limit(dBm)	Verdict
20	Lowest	1	0	QPSK	24.00	0.5	24.50	1.00	30.00	PASS
		1	49		23.84	0.5	24.34	1.00	30.00	PASS
		1	99		23.98	0.5	24.48	1.00	30.00	PASS
		50	0		23.28	0.5	23.78	1.00	30.00	PASS
		50	24		23.13	0.5	23.63	1.00	30.00	PASS
		50	49		22.99	0.5	23.49	1.00	30.00	PASS
		100	0		23.01	0.5	23.51	1.00	30.00	PASS
		1	0	16QAM	23.20	0.5	23.70	1.00	30.00	PASS
		1	49		23.18	0.5	23.68	1.00	30.00	PASS
		1	99		23.23	0.5	23.73	1.00	30.00	PASS
		50	0		22.59	0.5	23.09	1.00	30.00	PASS
		50	24		22.28	0.5	22.78	1.00	30.00	PASS
		50	49		22.23	0.5	22.73	1.00	30.00	PASS
		100	0		22.15	0.5	22.65	1.00	30.00	PASS
	Middle	1	0	QPSK	23.63	0.5	24.13	1.00	30.00	PASS
		1	49		24.35	0.5	24.85	1.00	30.00	PASS
		1	99		24.51	0.5	25.01	1.00	30.00	PASS
		50	0		23.26	0.5	23.76	1.00	30.00	PASS
		50	24		23.61	0.5	24.11	1.00	30.00	PASS
		50	49		23.64	0.5	24.14	1.00	30.00	PASS
		100	0		23.55	0.5	24.05	1.00	30.00	PASS
		1	0	16QAM	22.83	0.5	23.33	1.00	30.00	PASS
		1	49		23.51	0.5	24.01	1.00	30.00	PASS
		1	99		23.47	0.5	23.97	1.00	30.00	PASS
		50	0		22.49	0.5	22.99	1.00	30.00	PASS
		50	24		22.90	0.5	23.40	1.00	30.00	PASS
		50	49		22.90	0.5	23.40	1.00	30.00	PASS
		100	0		22.83	0.5	23.33	1.00	30.00	PASS
	Highest	1	0	QPSK	24.20	0.5	24.70	1.00	30.00	PASS
		1	49		24.25	0.5	24.75	1.00	30.00	PASS
		1	99		23.64	0.5	24.14	1.00	30.00	PASS
		50	0		23.66	0.5	24.16	1.00	30.00	PASS
		50	24		23.72	0.5	24.22	1.00	30.00	PASS
		50	49		23.27	0.5	23.77	1.00	30.00	PASS
		100	0		23.48	0.5	23.98	1.00	30.00	PASS
		1	0	16QAM	23.42	0.5	23.92	1.00	30.00	PASS
		1	49		23.60	0.5	24.10	1.00	30.00	PASS
		1	99		22.91	0.5	23.41	1.00	30.00	PASS
		50	0		22.96	0.5	23.46	1.00	30.00	PASS
		50	24		23.01	0.5	23.51	1.00	30.00	PASS
		50	49		22.34	0.5	22.84	1.00	30.00	PASS
		100	0		22.71	0.5	23.21	1.00	30.00	PASS

Radiated Power (ERP) for LTE Band 5 /1.4M										
BW (MHz)	UL Channel	RB Size	RB offset	Modulation	Conduction AVG Power(dBm)	Ant Gain（dBi）	ERP (dBm)	ERP Limit(W)	ERP Limit(dBm)	Verdict
1.4	Lowest	1	0	QPSK	17.31	2.18	17.34	7.00	38.45	PASS
		1	2		17.26	2.18	17.29	7.00	38.45	PASS
		1	5		17.46	2.18	17.49	7.00	38.45	PASS
		3	0		17.44	2.18	17.47	7.00	38.45	PASS
		3	1		17.46	2.18	17.49	7.00	38.45	PASS
		3	2		17.54	2.18	17.57	7.00	38.45	PASS
		6	0		16.54	2.18	16.57	7.00	38.45	PASS
		1	0	16QAM	16.29	2.18	16.32	7.00	38.45	PASS
		1	2		16.23	2.18	16.26	7.00	38.45	PASS
		1	5		16.53	2.18	16.56	7.00	38.45	PASS
		3	0		16.53	2.18	16.56	7.00	38.45	PASS
		3	1		16.55	2.18	16.58	7.00	38.45	PASS
		3	2		16.58	2.18	16.61	7.00	38.45	PASS
		6	0		15.70	2.18	15.73	7.00	38.45	PASS
	Middle	1	0	QPSK	18.77	2.18	18.80	7.00	38.45	PASS
		1	2		18.85	2.18	18.88	7.00	38.45	PASS
		1	5		19.20	2.18	19.23	7.00	38.45	PASS
		3	0		18.85	2.18	18.88	7.00	38.45	PASS
		3	1		18.95	2.18	18.98	7.00	38.45	PASS
		3	2		19.12	2.18	19.15	7.00	38.45	PASS
		6	0		18.08	2.18	18.11	7.00	38.45	PASS
		1	0	16QAM	17.85	2.18	17.88	7.00	38.45	PASS
		1	2		17.95	2.18	17.98	7.00	38.45	PASS
		1	5		18.30	2.18	18.33	7.00	38.45	PASS
		3	0		17.94	2.18	17.97	7.00	38.45	PASS
		3	1		18.04	2.18	18.07	7.00	38.45	PASS
		3	2		18.20	2.18	18.23	7.00	38.45	PASS
		6	0		17.37	2.18	17.40	7.00	38.45	PASS
	Highest	1	0	QPSK	21.11	2.18	21.14	7.00	38.45	PASS
		1	2		21.36	2.18	21.39	7.00	38.45	PASS
		1	5		21.79	2.18	21.82	7.00	38.45	PASS
		3	0		21.42	2.18	21.45	7.00	38.45	PASS
		3	1		21.59	2.18	21.62	7.00	38.45	PASS
		3	2		21.89	2.18	21.92	7.00	38.45	PASS
		6	0		20.78	2.18	20.81	7.00	38.45	PASS
		1	0	16QAM	20.41	2.18	20.44	7.00	38.45	PASS
		1	2		20.63	2.18	20.66	7.00	38.45	PASS
		1	5		21.15	2.18	21.18	7.00	38.45	PASS
		3	0		20.49	2.18	20.52	7.00	38.45	PASS
		3	1		20.70	2.18	20.73	7.00	38.45	PASS
		3	2		21.00	2.18	21.03	7.00	38.45	PASS
		6	0		19.74	2.18	19.77	7.00	38.45	PASS

Radiated Power (ERP) for LTE Band 5 /3M										
BW (MHz)	UL Channel	RB Size	RB offset	Modulation	Conduction AVG Power(dBm)	Ant Gain（dBi）	ERP (dBm)	ERP Limit(W)	ERP Limit(dBm)	Verdict
3	Lowest	1	0	QPSK	17.23	2.18	17.26	7.00	38.45	PASS
		1	7		17.52	2.18	17.55	7.00	38.45	PASS
		1	14		17.62	2.18	17.65	7.00	38.45	PASS
		8	0		16.65	2.18	16.68	7.00	38.45	PASS
		8	4		16.70	2.18	16.73	7.00	38.45	PASS
		8	7		16.70	2.18	16.73	7.00	38.45	PASS
		15	0		16.66	2.18	16.69	7.00	38.45	PASS
		1	0	16QAM	16.36	2.18	16.39	7.00	38.45	PASS
		1	7		16.67	2.18	16.70	7.00	38.45	PASS
		1	14		16.73	2.18	16.76	7.00	38.45	PASS
		8	0		15.61	2.18	15.64	7.00	38.45	PASS
		8	4		15.67	2.18	15.70	7.00	38.45	PASS
		8	7		15.71	2.18	15.74	7.00	38.45	PASS
		15	0		15.58	2.18	15.61	7.00	38.45	PASS
	Middle	1	0	QPSK	18.28	2.18	18.31	7.00	38.45	PASS
		1	7		18.91	2.18	18.94	7.00	38.45	PASS
		1	14		19.49	2.18	19.52	7.00	38.45	PASS
		8	0		17.81	2.18	17.84	7.00	38.45	PASS
		8	4		18.11	2.18	18.14	7.00	38.45	PASS
		8	7		18.44	2.18	18.47	7.00	38.45	PASS
		15	0		18.13	2.18	18.16	7.00	38.45	PASS
		1	0	16QAM	17.39	2.18	17.42	7.00	38.45	PASS
		1	7		18.04	2.18	18.07	7.00	38.45	PASS
		1	14		18.62	2.18	18.65	7.00	38.45	PASS
		8	0		16.95	2.18	16.98	7.00	38.45	PASS
		8	4		17.26	2.18	17.29	7.00	38.45	PASS
		8	7		17.59	2.18	17.62	7.00	38.45	PASS
		15	0		17.10	2.18	17.13	7.00	38.45	PASS
	Highest	1	0	QPSK	20.13	2.18	20.16	7.00	38.45	PASS
		1	7		20.77	2.18	20.80	7.00	38.45	PASS
		1	14		21.73	2.18	21.76	7.00	38.45	PASS
		8	0		19.66	2.18	19.69	7.00	38.45	PASS
		8	4		20.06	2.18	20.09	7.00	38.45	PASS
		8	7		20.60	2.18	20.63	7.00	38.45	PASS
		15	0		20.15	2.18	20.18	7.00	38.45	PASS
		1	0	16QAM	19.33	2.18	19.36	7.00	38.45	PASS
		1	7		20.05	2.18	20.08	7.00	38.45	PASS
		1	14		20.96	2.18	20.99	7.00	38.45	PASS
		8	0		18.59	2.18	18.62	7.00	38.45	PASS
		8	4		18.97	2.18	19.00	7.00	38.45	PASS
		8	7		19.46	2.18	19.49	7.00	38.45	PASS
		15	0		19.15	2.18	19.18	7.00	38.45	PASS

Radiated Power (ERP) for LTE Band 5 /5M										
BW (MHz)	UL Channel	RB Size	RB offset	Modulation	Conduction AVG Power(dBm)	Ant Gain（dBi）	ERP (dBm)	ERP Limit(W)	ERP Limit(dBm)	Verdict
5	Lowest	1	0	QPSK	17.20	2.18	17.23	7.00	38.45	PASS
		1	12		17.53	2.18	17.56	7.00	38.45	PASS
		1	24		17.54	2.18	17.57	7.00	38.45	PASS
		12	0		16.69	2.18	16.72	7.00	38.45	PASS
		12	6		16.78	2.18	16.81	7.00	38.45	PASS
		12	11		16.70	2.18	16.73	7.00	38.45	PASS
		25	0		16.65	2.18	16.68	7.00	38.45	PASS
		1	0	16QAM	16.56	2.18	16.59	7.00	38.45	PASS
		1	12		16.94	2.18	16.97	7.00	38.45	PASS
		1	24		16.85	2.18	16.88	7.00	38.45	PASS
		12	0		15.57	2.18	15.60	7.00	38.45	PASS
		12	6		15.67	2.18	15.70	7.00	38.45	PASS
		12	11		15.62	2.18	15.65	7.00	38.45	PASS
		25	0		15.61	2.18	15.64	7.00	38.45	PASS
	Middle	1	0	QPSK	17.85	2.18	17.88	7.00	38.45	PASS
		1	12		18.93	2.18	18.96	7.00	38.45	PASS
		1	24		19.99	2.18	20.02	7.00	38.45	PASS
		12	0		17.53	2.18	17.56	7.00	38.45	PASS
		12	6		18.12	2.18	18.15	7.00	38.45	PASS
		12	11		18.75	2.18	18.78	7.00	38.45	PASS
		25	0		18.11	2.18	18.14	7.00	38.45	PASS
		1	0	16QAM	17.01	2.18	17.04	7.00	38.45	PASS
		1	12		18.09	2.18	18.12	7.00	38.45	PASS
		1	24		19.13	2.18	19.16	7.00	38.45	PASS
		12	0		16.66	2.18	16.69	7.00	38.45	PASS
		12	6		17.27	2.18	17.30	7.00	38.45	PASS
		12	11		17.86	2.18	17.89	7.00	38.45	PASS
		25	0		17.14	2.18	17.17	7.00	38.45	PASS
	Highest	1	0	QPSK	19.82	2.18	19.85	7.00	38.45	PASS
		1	12		20.33	2.18	20.36	7.00	38.45	PASS
		1	24		21.70	2.18	21.73	7.00	38.45	PASS
		12	0		18.91	2.18	18.94	7.00	38.45	PASS
		12	6		19.39	2.18	19.42	7.00	38.45	PASS
		12	11		20.15	2.18	20.18	7.00	38.45	PASS
		25	0		19.58	2.18	19.61	7.00	38.45	PASS
		1	0	16QAM	18.84	2.18	18.87	7.00	38.45	PASS
		1	12		19.43	2.18	19.46	7.00	38.45	PASS
		1	24		20.92	2.18	20.95	7.00	38.45	PASS
		12	0		18.03	2.18	18.06	7.00	38.45	PASS
		12	6		18.49	2.18	18.52	7.00	38.45	PASS
		12	11		19.21	2.18	19.24	7.00	38.45	PASS
		25	0		18.53	2.18	18.56	7.00	38.45	PASS

Radiated Power (ERP) for LTE Band 5 /10M										
BW (MHz)	UL Channel	RB Size	RB offset	Modulation	Conduction AVG Power(dBm)	Ant Gain（dBi）	ERP (dBm)	ERP Limit(W)	ERP Limit(dBm)	Verdict
10	Lowest	1	0	QPSK	16.99	2.18	17.02	7.00	38.45	PASS
		1	24		17.49	2.18	17.52	7.00	38.45	PASS
		1	49		17.43	2.18	17.46	7.00	38.45	PASS
		25	0		16.43	2.18	16.46	7.00	38.45	PASS
		25	12		16.39	2.18	16.42	7.00	38.45	PASS
		25	24		16.29	2.18	16.32	7.00	38.45	PASS
		50	0		16.31	2.18	16.34	7.00	38.45	PASS
		1	0	16QAM	16.24	2.18	16.27	7.00	38.45	PASS
		1	24		16.56	2.18	16.59	7.00	38.45	PASS
		1	49		16.57	2.18	16.60	7.00	38.45	PASS
		25	0		15.42	2.18	15.45	7.00	38.45	PASS
		25	12		15.48	2.18	15.51	7.00	38.45	PASS
		25	24		15.37	2.18	15.40	7.00	38.45	PASS
		50	0		15.33	2.18	15.36	7.00	38.45	PASS
	Middle	1	0	QPSK	17.18	2.18	17.21	7.00	38.45	PASS
		1	24		18.67	2.18	18.70	7.00	38.45	PASS
		1	49		20.01	2.18	20.04	7.00	38.45	PASS
		25	0		16.83	2.18	16.86	7.00	38.45	PASS
		25	12		17.92	2.18	17.95	7.00	38.45	PASS
		25	24		18.84	2.18	18.87	7.00	38.45	PASS
		50	0		17.81	2.18	17.84	7.00	38.45	PASS
		1	0	16QAM	16.23	2.18	16.26	7.00	38.45	PASS
		1	24		17.79	2.18	17.82	7.00	38.45	PASS
		1	49		19.08	2.18	19.11	7.00	38.45	PASS
		25	0		15.94	2.18	15.97	7.00	38.45	PASS
		25	12		16.98	2.18	17.01	7.00	38.45	PASS
		25	24		17.93	2.18	17.96	7.00	38.45	PASS
		50	0		16.89	2.18	16.92	7.00	38.45	PASS
	Highest	1	0	QPSK	21.92	2.18	21.95	7.00	38.45	PASS
		1	24		19.68	2.18	19.71	7.00	38.45	PASS
		1	49		21.20	2.18	21.23	7.00	38.45	PASS
		25	0		18.93	2.18	18.96	7.00	38.45	PASS
		25	12		18.72	2.18	18.75	7.00	38.45	PASS
		25	24		19.07	2.18	19.10	7.00	38.45	PASS
		50	0		18.89	2.18	18.92	7.00	38.45	PASS
		1	0	16QAM	19.22	2.18	19.25	7.00	38.45	PASS
		1	24		18.87	2.18	18.90	7.00	38.45	PASS
		1	49		20.37	2.18	20.40	7.00	38.45	PASS
		25	0		18.02	2.18	18.05	7.00	38.45	PASS
		25	12		17.77	2.18	17.80	7.00	38.45	PASS
		25	24		18.07	2.18	18.10	7.00	38.45	PASS
		50	0		17.95	2.18	17.98	7.00	38.45	PASS

Radiated Power (EIRP) for LTE Band 7 /5M										
BW (MHz)	UL Channel	RB Size	RB offset	Modulation	Conduction AVG Power(dBm)	Ant Gain（dBi）	EIRP (dBm)	EIRP Limit(W)	EIRP Limit(dBm)	Verdict
5	Lowest	1	0	QPSK	22.57	1.93	24.50	2.00	33.01	PASS
		1	12		22.56	1.93	24.49	2.00	33.01	PASS
		1	24		22.31	1.93	24.24	2.00	33.01	PASS
		12	0		22.02	1.93	23.95	2.00	33.01	PASS
		12	6		21.97	1.93	23.90	2.00	33.01	PASS
		12	11		21.77	1.93	23.70	2.00	33.01	PASS
		25	0		21.86	1.93	23.79	2.00	33.01	PASS
		1	0	16QAM	22.11	1.93	24.04	2.00	33.01	PASS
		1	12		22.02	1.93	23.95	2.00	33.01	PASS
		1	24		21.78	1.93	23.71	2.00	33.01	PASS
		12	0		21.15	1.93	23.08	2.00	33.01	PASS
		12	6		21.15	1.93	23.08	2.00	33.01	PASS
		12	11		20.91	1.93	22.84	2.00	33.01	PASS
		25	0		21.10	1.93	23.03	2.00	33.01	PASS
	Middle	1	0	QPSK	23.69	1.93	25.62	2.00	33.01	PASS
		1	12		23.26	1.93	25.19	2.00	33.01	PASS
		1	24		23.58	1.93	25.51	2.00	33.01	PASS
		12	0		23.20	1.93	25.13	2.00	33.01	PASS
		12	6		23.27	1.93	25.20	2.00	33.01	PASS
		12	11		23.16	1.93	25.09	2.00	33.01	PASS
		25	0		23.20	1.93	25.13	2.00	33.01	PASS
		1	0	16QAM	22.86	1.93	24.79	2.00	33.01	PASS
		1	12		22.92	1.93	24.85	2.00	33.01	PASS
		1	24		22.77	1.93	24.70	2.00	33.01	PASS
		12	0		22.43	1.93	24.36	2.00	33.01	PASS
		12	6		22.55	1.93	24.48	2.00	33.01	PASS
		12	11		22.44	1.93	24.37	2.00	33.01	PASS
		25	0		22.39	1.93	24.32	2.00	33.01	PASS
	Highest	1	0	QPSK	21.35	1.93	23.28	2.00	33.01	PASS
		1	12		22.58	1.93	24.51	2.00	33.01	PASS
		1	24		22.54	1.93	24.47	2.00	33.01	PASS
		12	0		21.33	1.93	23.26	2.00	33.01	PASS
		12	6		21.64	1.93	23.57	2.00	33.01	PASS
		12	11		21.96	1.93	23.89	2.00	33.01	PASS
		25	0		21.68	1.93	23.61	2.00	33.01	PASS
		1	0	16QAM	20.73	1.93	22.66	2.00	33.01	PASS
		1	12		21.85	1.93	23.78	2.00	33.01	PASS
		1	24		21.94	1.93	23.87	2.00	33.01	PASS
		12	0		20.36	1.93	22.29	2.00	33.01	PASS
		12	6		20.73	1.93	22.66	2.00	33.01	PASS
		12	11		21.04	1.93	22.97	2.00	33.01	PASS
		25	0		20.61	1.93	22.54	2.00	33.01	PASS

Radiated Power (EIRP) for LTE Band 7 /10M										
BW (MHz)	UL Channel	RB Size	RB offset	Modulation	Conduction AVG Power(dBm)	Ant Gain（dBi）	EIRP (dBm)	EIRP Limit(W)	EIRP Limit(dBm)	Verdict
10	Lowest	1	0	QPSK	22.40	1.93	24.33	2.00	33.01	PASS
		1	24		22.11	1.93	24.04	2.00	33.01	PASS
		1	49		21.48	1.93	23.41	2.00	33.01	PASS
		25	0		21.54	1.93	23.47	2.00	33.01	PASS
		25	12		21.41	1.93	23.34	2.00	33.01	PASS
		25	24		21.05	1.93	22.98	2.00	33.01	PASS
		50	0		21.31	1.93	23.24	2.00	33.01	PASS
		1	0	16QAM	21.59	1.93	23.52	2.00	33.01	PASS
		1	24		21.43	1.93	23.36	2.00	33.01	PASS
		1	49		20.88	1.93	22.81	2.00	33.01	PASS
		25	0		20.76	1.93	22.69	2.00	33.01	PASS
		25	12		20.64	1.93	22.57	2.00	33.01	PASS
		25	24		20.35	1.93	22.28	2.00	33.01	PASS
		50	0		20.54	1.93	22.47	2.00	33.01	PASS
	Middle	1	0	QPSK	23.31	1.93	25.24	2.00	33.01	PASS
		1	24		23.68	1.93	25.61	2.00	33.01	PASS
		1	49		23.20	1.93	25.13	2.00	33.01	PASS
		25	0		23.02	1.93	24.95	2.00	33.01	PASS
		25	12		23.21	1.93	25.14	2.00	33.01	PASS
		25	24		22.90	1.93	24.83	2.00	33.01	PASS
		50	0		23.07	1.93	25.00	2.00	33.01	PASS
		1	0	16QAM	22.49	1.93	24.42	2.00	33.01	PASS
		1	24		22.89	1.93	24.82	2.00	33.01	PASS
		1	49		22.38	1.93	24.31	2.00	33.01	PASS
		25	0		22.19	1.93	24.12	2.00	33.01	PASS
		25	12		22.39	1.93	24.32	2.00	33.01	PASS
		25	24		22.12	1.93	24.05	2.00	33.01	PASS
		50	0		22.26	1.93	24.19	2.00	33.01	PASS
	Highest	1	0	QPSK	20.43	1.93	22.36	2.00	33.01	PASS
		1	24		22.16	1.93	24.09	2.00	33.01	PASS
		1	49		22.40	1.93	24.33	2.00	33.01	PASS
		25	0		20.18	1.93	22.11	2.00	33.01	PASS
		25	12		20.72	1.93	22.65	2.00	33.01	PASS
		25	24		21.32	1.93	23.25	2.00	33.01	PASS
		50	0		20.73	1.93	22.66	2.00	33.01	PASS
		1	0	16QAM	19.73	1.93	21.66	2.00	33.01	PASS
		1	24		20.55	1.93	22.48	2.00	33.01	PASS
		1	49		21.67	1.93	23.60	2.00	33.01	PASS
		25	0		19.25	1.93	21.18	2.00	33.01	PASS
		25	12		19.78	1.93	21.71	2.00	33.01	PASS
		25	24		20.38	1.93	22.31	2.00	33.01	PASS
		50	0		19.87	1.93	21.80	2.00	33.01	PASS

Radiated Power (EIRP) for LTE Band 7 /15M										
BW (MHz)	UL Channel	RB Size	RB offset	Modulation	Conduction AVG Power(dBm)	Ant Gain（dBi）	EIRP (dBm)	EIRP Limit(W)	EIRP Limit(dBm)	Verdict
15	Lowest	1	0	QPSK	22.47	1.93	24.40	2.00	33.01	PASS
		1	37		21.75	1.93	23.68	2.00	33.01	PASS
		1	74		21.61	1.93	23.54	2.00	33.01	PASS
		36	0		21.53	1.93	23.46	2.00	33.01	PASS
		36	18		21.21	1.93	23.14	2.00	33.01	PASS
		36	39		20.95	1.93	22.88	2.00	33.01	PASS
		75	0		21.13	1.93	23.06	2.00	33.01	PASS
		1	0	16QAM	21.71	1.93	23.64	2.00	33.01	PASS
		1	37		21.22	1.93	23.15	2.00	33.01	PASS
		1	74		20.95	1.93	22.88	2.00	33.01	PASS
		36	0		20.71	1.93	22.64	2.00	33.01	PASS
		36	18		20.43	1.93	22.36	2.00	33.01	PASS
		36	39		20.13	1.93	22.06	2.00	33.01	PASS
		75	0		20.45	1.93	22.38	2.00	33.01	PASS
	Middle	1	0	QPSK	23.20	1.93	25.13	2.00	33.01	PASS
		1	37		21.92	1.93	23.85	2.00	33.01	PASS
		1	74		22.96	1.93	24.89	2.00	33.01	PASS
		36	0		23.01	1.93	24.94	2.00	33.01	PASS
		36	18		23.19	1.93	25.12	2.00	33.01	PASS
		36	39		22.80	1.93	24.73	2.00	33.01	PASS
		75	0		23.04	1.93	24.97	2.00	33.01	PASS
		1	0	16QAM	22.38	1.93	24.31	2.00	33.01	PASS
		1	37		22.41	1.93	24.34	2.00	33.01	PASS
		1	74		22.13	1.93	24.06	2.00	33.01	PASS
		36	0		22.22	1.93	24.15	2.00	33.01	PASS
		36	18		22.40	1.93	24.33	2.00	33.01	PASS
		36	39		22.05	1.93	23.98	2.00	33.01	PASS
		75	0		22.23	1.93	24.16	2.00	33.01	PASS
	Highest	1	0	QPSK	19.24	1.93	21.17	2.00	33.01	PASS
		1	37		22.05	1.93	23.98	2.00	33.01	PASS
		1	74		22.24	1.93	24.17	2.00	33.01	PASS
		36	0		19.73	1.93	21.66	2.00	33.01	PASS
		36	18		20.22	1.93	22.15	2.00	33.01	PASS
		36	39		20.97	1.93	22.90	2.00	33.01	PASS
		75	0		20.42	1.93	22.35	2.00	33.01	PASS
		1	0	16QAM	19.59	1.93	21.52	2.00	33.01	PASS
		1	37		20.24	1.93	22.17	2.00	33.01	PASS
		1	74		21.39	1.93	23.32	2.00	33.01	PASS
		36	0		18.85	1.93	20.78	2.00	33.01	PASS
		36	18		19.33	1.93	21.26	2.00	33.01	PASS
		36	39		20.04	1.93	21.97	2.00	33.01	PASS
		75	0		19.53	1.93	21.46	2.00	33.01	PASS

Radiated Power (EIRP) for LTE Band 7 /20M										
BW (MHz)	UL Channel	RB Size	RB offset	Modulation	Conduction AVG Power(dBm)	Ant Gain（dBi）	EIRP (dBm)	EIRP Limit(W)	EIRP Limit(dBm)	Verdict
20	Lowest	1	0	QPSK	22.33	1.93	24.26	2.00	33.01	PASS
		1	49		21.73	1.93	23.66	2.00	33.01	PASS
		1	99		21.56	1.93	23.49	2.00	33.01	PASS
		50	0		21.27	1.93	23.20	2.00	33.01	PASS
		50	24		20.98	1.93	22.91	2.00	33.01	PASS
		50	49		20.83	1.93	22.76	2.00	33.01	PASS
		100	0		20.90	1.93	22.83	2.00	33.01	PASS
		1	0	16QAM	21.47	1.93	23.40	2.00	33.01	PASS
		1	49		20.93	1.93	22.86	2.00	33.01	PASS
		1	99		18.65	1.93	20.58	2.00	33.01	PASS
		50	0		20.50	1.93	22.43	2.00	33.01	PASS
		50	24		20.19	1.93	22.12	2.00	33.01	PASS
		50	49		20.02	1.93	21.95	2.00	33.01	PASS
		100	0		20.20	1.93	22.13	2.00	33.01	PASS
	Middle	1	0	QPSK	22.75	1.93	24.68	2.00	33.01	PASS
		1	49		23.72	1.93	25.65	2.00	33.01	PASS
		1	99		22.40	1.93	24.33	2.00	33.01	PASS
		50	0		22.84	1.93	24.77	2.00	33.01	PASS
		50	24		23.16	1.93	25.09	2.00	33.01	PASS
		50	49		22.61	1.93	24.54	2.00	33.01	PASS
		100	0		22.95	1.93	24.88	2.00	33.01	PASS
		1	0	16QAM	21.93	1.93	23.86	2.00	33.01	PASS
		1	49		22.90	1.93	24.83	2.00	33.01	PASS
		1	99		21.57	1.93	23.50	2.00	33.01	PASS
		50	0		22.08	1.93	24.01	2.00	33.01	PASS
		50	24		22.39	1.93	24.32	2.00	33.01	PASS
		50	49		21.82	1.93	23.75	2.00	33.01	PASS
		100	0		22.18	1.93	24.11	2.00	33.01	PASS
	Highest	1	0	QPSK	20.88	1.93	22.81	2.00	33.01	PASS
		1	49		20.55	1.93	22.48	2.00	33.01	PASS
		1	99		22.27	1.93	24.20	2.00	33.01	PASS
		50	0		19.83	1.93	21.76	2.00	33.01	PASS
		50	24		19.92	1.93	21.85	2.00	33.01	PASS
		50	49		20.65	1.93	22.58	2.00	33.01	PASS
		100	0		20.13	1.93	22.06	2.00	33.01	PASS
		1	0	16QAM	20.03	1.93	21.96	2.00	33.01	PASS
		1	49		19.70	1.93	21.63	2.00	33.01	PASS
		1	99		21.44	1.93	23.37	2.00	33.01	PASS
		50	0		18.96	1.93	20.89	2.00	33.01	PASS
		50	24		19.12	1.93	21.05	2.00	33.01	PASS
		50	49		19.72	1.93	21.65	2.00	33.01	PASS
		100	0		19.28	1.93	21.21	2.00	33.01	PASS

Radiated Power (ERP) for LTE Band 12 /1.4M										
BW (MHz)	UL Channel	RB Size	RB offset	Modulation	Conduction AVG Power(dBm)	Ant Gain（dBi）	ERP (dBm)	ERP Limit(W)	ERP Limit(dBm)	Verdict
1.4	Lowest	1	0	QPSK	23.06	1.57	22.48	3.00	34.77	PASS
		1	2		23.21	1.57	22.63	3.00	34.77	PASS
		1	5		23.17	1.57	22.59	3.00	34.77	PASS
		3	0		23.36	1.57	22.78	3.00	34.77	PASS
		3	1		23.33	1.57	22.75	3.00	34.77	PASS
		3	2		23.27	1.57	22.69	3.00	34.77	PASS
		6	0		22.79	1.57	22.21	3.00	34.77	PASS
		1	0	16QAM	22.57	1.57	21.99	3.00	34.77	PASS
		1	2		22.42	1.57	21.84	3.00	34.77	PASS
		1	5		22.42	1.57	21.84	3.00	34.77	PASS
		3	0		22.62	1.57	22.04	3.00	34.77	PASS
		3	1		22.59	1.57	22.01	3.00	34.77	PASS
		3	2		22.55	1.57	21.97	3.00	34.77	PASS
		6	0		22.09	1.57	21.51	3.00	34.77	PASS
	Middle	1	0	QPSK	23.70	1.57	23.12	3.00	34.77	PASS
		1	2		23.51	1.57	22.93	3.00	34.77	PASS
		1	5		23.49	1.57	22.91	3.00	34.77	PASS
		3	0		23.68	1.57	23.10	3.00	34.77	PASS
		3	1		23.67	1.57	23.09	3.00	34.77	PASS
		3	2		23.61	1.57	23.03	3.00	34.77	PASS
		6	0		22.83	1.57	22.25	3.00	34.77	PASS
		1	0	16QAM	22.98	1.57	22.40	3.00	34.77	PASS
		1	2		22.92	1.57	22.34	3.00	34.77	PASS
		1	5		25.34	1.57	24.76	3.00	34.77	PASS
		3	0		25.45	1.57	24.87	3.00	34.77	PASS
		3	1		24.89	1.57	24.31	3.00	34.77	PASS
		3	2		25.42	1.57	24.84	3.00	34.77	PASS
		6	0		24.60	1.57	24.02	3.00	34.77	PASS
	Highest	1	0	QPSK	25.86	1.57	25.28	3.00	34.77	PASS
		1	2		25.88	1.57	25.30	3.00	34.77	PASS
		1	5		26.16	1.57	25.58	3.00	34.77	PASS
		3	0		25.89	1.57	25.31	3.00	34.77	PASS
		3	1		25.96	1.57	25.38	3.00	34.77	PASS
		3	2		26.08	1.57	25.50	3.00	34.77	PASS
		6	0		25.14	1.57	24.56	3.00	34.77	PASS
		1	0	16QAM	24.98	1.57	24.40	3.00	34.77	PASS
		1	2		24.98	1.57	24.40	3.00	34.77	PASS
		1	5		25.28	1.57	24.70	3.00	34.77	PASS
		3	0		24.93	1.57	24.35	3.00	34.77	PASS
		3	1		25.06	1.57	24.48	3.00	34.77	PASS
		3	2		25.19	1.57	24.61	3.00	34.77	PASS
		6	0		24.33	1.57	23.75	3.00	34.77	PASS

Radiated Power (ERP) for LTE Band 12 /3M										
BW (MHz)	UL Channel	RB Size	RB offset	Modulation	Conduction AVG Power(dBm)	Ant Gain（dBi）	ERP (dBm)	ERP Limit(W)	ERP Limit(dBm)	Verdict
3	Lowest	1	0	QPSK	26.22	1.57	25.64	3.00	34.77	PASS
		1	7		26.10	1.57	25.52	3.00	34.77	PASS
		1	14		26.30	1.57	25.72	3.00	34.77	PASS
		8	0		25.52	1.57	24.94	3.00	34.77	PASS
		8	4		25.57	1.57	24.99	3.00	34.77	PASS
		8	7		25.60	1.57	25.02	3.00	34.77	PASS
		15	0		25.59	1.57	25.01	3.00	34.77	PASS
		1	0	16QAM	25.48	1.57	24.90	3.00	34.77	PASS
		1	7		25.48	1.57	24.90	3.00	34.77	PASS
		1	14		25.61	1.57	25.03	3.00	34.77	PASS
		8	0		24.58	1.57	24.00	3.00	34.77	PASS
		8	4		24.63	1.57	24.05	3.00	34.77	PASS
		8	7		24.62	1.57	24.04	3.00	34.77	PASS
		15	0		24.59	1.57	24.01	3.00	34.77	PASS
	Middle	1	0	QPSK	26.44	1.57	25.86	3.00	34.77	PASS
		1	7		26.29	1.57	25.71	3.00	34.77	PASS
		1	14		26.15	1.57	25.57	3.00	34.77	PASS
		8	0		25.48	1.57	24.90	3.00	34.77	PASS
		8	4		25.45	1.57	24.87	3.00	34.77	PASS
		8	7		25.33	1.57	24.75	3.00	34.77	PASS
		15	0		25.39	1.57	24.81	3.00	34.77	PASS
		1	0	16QAM	25.44	1.57	24.86	3.00	34.77	PASS
		1	7		25.41	1.57	24.83	3.00	34.77	PASS
		1	14		25.20	1.57	24.62	3.00	34.77	PASS
		8	0		24.45	1.57	23.87	3.00	34.77	PASS
		8	4		24.43	1.57	23.85	3.00	34.77	PASS
		8	7		24.30	1.57	23.72	3.00	34.77	PASS
		15	0		24.22	1.57	23.64	3.00	34.77	PASS
	Highest	1	0	QPSK	25.50	1.57	24.92	3.00	34.77	PASS
		1	7		25.71	1.57	25.13	3.00	34.77	PASS
		1	14		26.06	1.57	25.48	3.00	34.77	PASS
		8	0		24.98	1.57	24.40	3.00	34.77	PASS
		8	4		25.07	1.57	24.49	3.00	34.77	PASS
		8	7		25.17	1.57	24.59	3.00	34.77	PASS
		15	0		25.13	1.57	24.55	3.00	34.77	PASS
		1	0	16QAM	24.92	1.57	24.34	3.00	34.77	PASS
		1	7		25.08	1.57	24.50	3.00	34.77	PASS
		1	14		25.40	1.57	24.82	3.00	34.77	PASS
		8	0		23.96	1.57	23.38	3.00	34.77	PASS
		8	4		24.02	1.57	23.44	3.00	34.77	PASS
		8	7		24.10	1.57	23.52	3.00	34.77	PASS
		15	0		24.26	1.57	23.68	3.00	34.77	PASS

Radiated Power (ERP) for LTE Band 12 /5M										
BW (MHz)	UL Channel	RB Size	RB offset	Modulation	Conduction AVG Power(dBm)	Ant Gain（dBi）	ERP (dBm)	ERP Limit(W)	ERP Limit(dBm)	Verdict
5	Lowest	1	0	QPSK	26.06	1.57	25.48	3.00	34.77	PASS
		1	12		26.27	1.57	25.69	3.00	34.77	PASS
		1	24		26.65	1.57	26.07	3.00	34.77	PASS
		12	0		25.56	1.57	24.98	3.00	34.77	PASS
		12	6		25.79	1.57	25.21	3.00	34.77	PASS
		12	11		25.95	1.57	25.37	3.00	34.77	PASS
		25	0		25.77	1.57	25.19	3.00	34.77	PASS
		1	0	16QAM	25.56	1.57	24.98	3.00	34.77	PASS
		1	12		25.76	1.57	25.18	3.00	34.77	PASS
		1	24		26.06	1.57	25.48	3.00	34.77	PASS
		12	0		24.60	1.57	24.02	3.00	34.77	PASS
		12	6		24.78	1.57	24.20	3.00	34.77	PASS
		12	11		24.92	1.57	24.34	3.00	34.77	PASS
		25	0		24.78	1.57	24.20	3.00	34.77	PASS
	Middle	1	0	QPSK	26.46	1.57	25.88	3.00	34.77	PASS
		1	12		26.29	1.57	25.71	3.00	34.77	PASS
		1	24		26.03	1.57	25.45	3.00	34.77	PASS
		12	0		25.45	1.57	24.87	3.00	34.77	PASS
		12	6		25.47	1.57	24.89	3.00	34.77	PASS
		12	11		25.33	1.57	24.75	3.00	34.77	PASS
		25	0		25.40	1.57	24.82	3.00	34.77	PASS
		1	0	16QAM	25.58	1.57	25.00	3.00	34.77	PASS
		1	12		25.51	1.57	24.93	3.00	34.77	PASS
		1	24		25.21	1.57	24.63	3.00	34.77	PASS
		12	0		24.58	1.57	24.00	3.00	34.77	PASS
		12	6		24.47	1.57	23.89	3.00	34.77	PASS
		12	11		24.33	1.57	23.75	3.00	34.77	PASS
		25	0		24.32	1.57	23.74	3.00	34.77	PASS
	Highest	1	0	QPSK	25.78	1.57	25.20	3.00	34.77	PASS
		1	12		25.65	1.57	25.07	3.00	34.77	PASS
		1	24		26.07	1.57	25.49	3.00	34.77	PASS
		12	0		25.07	1.57	24.49	3.00	34.77	PASS
		12	6		25.12	1.57	24.54	3.00	34.77	PASS
		12	11		25.20	1.57	24.62	3.00	34.77	PASS
		25	0		25.17	1.57	24.59	3.00	34.77	PASS
		1	0	16QAM	25.19	1.57	24.61	3.00	34.77	PASS
		1	12		25.07	1.57	24.49	3.00	34.77	PASS
		1	24		25.38	1.57	24.80	3.00	34.77	PASS
		12	0		24.30	1.57	23.72	3.00	34.77	PASS
		12	6		24.26	1.57	23.68	3.00	34.77	PASS
		12	11		24.29	1.57	23.71	3.00	34.77	PASS
		25	0		24.19	1.57	23.61	3.00	34.77	PASS

Radiated Power (ERP) for LTE Band 12 /10M										
BW (MHz)	UL Channel	RB Size	RB offset	Modulation	Conduction AVG Power(dBm)	Ant Gain（dBi）	ERP (dBm)	ERP Limit(W)	ERP Limit(dBm)	Verdict
10	Lowest	1	0	QPSK	25.90	1.57	25.32	3.00	34.77	PASS
		1	24		26.57	1.57	25.99	3.00	34.77	PASS
		1	49		26.69	1.57	26.11	3.00	34.77	PASS
		25	0		25.56	1.57	24.98	3.00	34.77	PASS
		25	12		25.68	1.57	25.10	3.00	34.77	PASS
		25	24		25.26	1.57	24.68	3.00	34.77	PASS
		50	0		25.42	1.57	24.84	3.00	34.77	PASS
		1	0	16QAM	25.15	1.57	24.57	3.00	34.77	PASS
		1	24		25.77	1.57	25.19	3.00	34.77	PASS
		1	49		25.10	1.57	24.52	3.00	34.77	PASS
		25	0		24.60	1.57	24.02	3.00	34.77	PASS
		25	12		24.76	1.57	24.18	3.00	34.77	PASS
		25	24		24.30	1.57	23.72	3.00	34.77	PASS
		50	0		24.45	1.57	23.87	3.00	34.77	PASS
	Middle	1	0	QPSK	26.34	1.57	25.76	3.00	34.77	PASS
		1	24		26.08	1.57	25.50	3.00	34.77	PASS
		1	49		25.50	1.57	24.92	3.00	34.77	PASS
		25	0		25.34	1.57	24.76	3.00	34.77	PASS
		25	12		25.24	1.57	24.66	3.00	34.77	PASS
		25	24		25.14	1.57	24.56	3.00	34.77	PASS
		50	0		25.23	1.57	24.65	3.00	34.77	PASS
		1	0	16QAM	25.41	1.57	24.83	3.00	34.77	PASS
		1	24		25.24	1.57	24.66	3.00	34.77	PASS
		1	49		24.68	1.57	24.10	3.00	34.77	PASS
		25	0		24.38	1.57	23.80	3.00	34.77	PASS
		25	12		24.23	1.57	23.65	3.00	34.77	PASS
		25	24		24.13	1.57	23.55	3.00	34.77	PASS
		50	0		24.24	1.57	23.66	3.00	34.77	PASS
	Highest	1	0	QPSK	26.06	1.57	25.48	3.00	34.77	PASS
		1	24		25.78	1.57	25.20	3.00	34.77	PASS
		1	49		25.74	1.57	25.16	3.00	34.77	PASS
		25	0		25.06	1.57	24.48	3.00	34.77	PASS
		25	12		25.12	1.57	24.54	3.00	34.77	PASS
		25	24		24.93	1.57	24.35	3.00	34.77	PASS
		50	0		25.04	1.57	24.46	3.00	34.77	PASS
		1	0	16QAM	25.29	1.57	24.71	3.00	34.77	PASS
		1	24		25.19	1.57	24.61	3.00	34.77	PASS
		1	49		25.06	1.57	24.48	3.00	34.77	PASS
		25	0		24.03	1.57	23.45	3.00	34.77	PASS
		25	12		24.18	1.57	23.60	3.00	34.77	PASS
		25	24		23.95	1.57	23.37	3.00	34.77	PASS
		50	0		24.08	1.57	23.50	3.00	34.77	PASS

Radiated Power (ERP) for LTE Band 13 /5M										
BW (MHz)	UL Channel	RB Size	RB offset	Modulation	Conduction AVG Power(dBm)	Ant Gain（dBi）	ERP (dBm)	ERP Limit(W)	ERP Limit(dBm)	Verdict
5	Lowest	1	0	QPSK	21.37	1.9	21.12	3.00	34.77	PASS
		1	12		21.62	1.9	21.37	3.00	34.77	PASS
		1	24		21.45	1.9	21.20	3.00	34.77	PASS
		12	0		21.44	1.9	21.19	3.00	34.77	PASS
		12	6		21.54	1.9	21.29	3.00	34.77	PASS
		12	11		21.51	1.9	21.26	3.00	34.77	PASS
		25	0		21.46	1.9	21.21	3.00	34.77	PASS
		1	0	16QAM	21.49	1.9	21.24	3.00	34.77	PASS
		1	12		21.76	1.9	21.51	3.00	34.77	PASS
		1	24		21.62	1.9	21.37	3.00	34.77	PASS
		12	0		21.49	1.9	21.24	3.00	34.77	PASS
		12	6		21.60	1.9	21.35	3.00	34.77	PASS
		12	11		21.58	1.9	21.33	3.00	34.77	PASS
		25	0		21.42	1.9	21.17	3.00	34.77	PASS
	Middle	1	0	QPSK	21.39	1.9	21.14	3.00	34.77	PASS
		1	12		21.76	1.9	21.51	3.00	34.77	PASS
		1	24		21.95	1.9	21.70	3.00	34.77	PASS
		12	0		21.45	1.9	21.20	3.00	34.77	PASS
		12	6		21.64	1.9	21.39	3.00	34.77	PASS
		12	11		21.84	1.9	21.59	3.00	34.77	PASS
		25	0		21.65	1.9	21.40	3.00	34.77	PASS
		1	0	16QAM	21.39	1.9	21.14	3.00	34.77	PASS
		1	12		21.78	1.9	21.53	3.00	34.77	PASS
		1	24		21.98	1.9	21.73	3.00	34.77	PASS
		12	0		21.56	1.9	21.31	3.00	34.77	PASS
		12	6		21.76	1.9	21.51	3.00	34.77	PASS
		12	11		21.97	1.9	21.72	3.00	34.77	PASS
		25	0		21.65	1.9	21.40	3.00	34.77	PASS
	Highest	1	0	QPSK	21.48	1.9	21.23	3.00	34.77	PASS
		1	12		22.13	1.9	21.88	3.00	34.77	PASS
		1	24		22.22	1.9	21.97	3.00	34.77	PASS
		12	0		21.89	1.9	21.64	3.00	34.77	PASS
		12	6		22.14	1.9	21.89	3.00	34.77	PASS
		12	11		22.27	1.9	22.02	3.00	34.77	PASS
		25	0		22.08	1.9	21.83	3.00	34.77	PASS
		1	0	16QAM	21.85	1.9	21.60	3.00	34.77	PASS
		1	12		22.50	1.9	22.25	3.00	34.77	PASS
		1	24		22.57	1.9	22.32	3.00	34.77	PASS
		12	0		21.90	1.9	21.65	3.00	34.77	PASS
		12	6		22.15	1.9	21.90	3.00	34.77	PASS
		12	11		22.28	1.9	22.03	3.00	34.77	PASS
		25	0		22.12	1.9	21.87	3.00	34.77	PASS

Radiated Power (ERP) for LTE Band 13 /10M										
BW (MHz)	UL Channel	RB Size	RB offset	Modulation	Conduction AVG Power(dBm)	Ant Gain（dBi）	ERP (dBm)	ERP Limit(W)	ERP Limit(dBm)	Verdict
10	Middle	1	0	QPSK	20.61	1.9	20.36	3.00	34.77	PASS
		1	24		21.37	1.9	21.12	3.00	34.77	PASS
		1	49		21.50	1.9	21.25	3.00	34.77	PASS
		25	0		21.05	1.9	20.80	3.00	34.77	PASS
		25	12		21.40	1.9	21.15	3.00	34.77	PASS
		25	24		21.64	1.9	21.39	3.00	34.77	PASS
		50	0		21.34	1.9	21.09	3.00	34.77	PASS
		1	0	16QAM	20.83	1.9	20.58	3.00	34.77	PASS
		1	24		21.62	1.9	21.37	3.00	34.77	PASS
		1	49		21.76	1.9	21.51	3.00	34.77	PASS
		25	0		21.12	1.9	20.87	3.00	34.77	PASS
		25	12		21.48	1.9	21.23	3.00	34.77	PASS
		25	24		21.73	1.9	21.48	3.00	34.77	PASS
		50	0		21.36	1.9	21.11	3.00	34.77	PASS

Radiated Power (ERP) for LTE Band 17 /5M										
BW (MHz)	UL Channel	RB Size	RB offset	Modulation	Conduction AVG Power(dBm)	Ant Gain（dBi）	ERP (dBm)	ERP Limit(W)	ERP Limit(dBm)	Verdict
5	Lowest	1	0	QPSK	26.22	1.57	25.64	3.00	34.77	PASS
		1	12		26.32	1.57	25.74	3.00	34.77	PASS
		1	24		26.15	1.57	25.57	3.00	34.77	PASS
		12	0		25.40	1.57	24.82	3.00	34.77	PASS
		12	6		25.46	1.57	24.88	3.00	34.77	PASS
		12	11		25.48	1.57	24.90	3.00	34.77	PASS
		25	0		25.45	1.57	24.87	3.00	34.77	PASS
		1	0	16QAM	25.60	1.57	25.02	3.00	34.77	PASS
		1	12		25.75	1.57	25.17	3.00	34.77	PASS
		1	24		25.65	1.57	25.07	3.00	34.77	PASS
		12	0		24.36	1.57	23.78	3.00	34.77	PASS
		12	6		24.39	1.57	23.81	3.00	34.77	PASS
		12	11		24.37	1.57	23.79	3.00	34.77	PASS
		25	0		24.39	1.57	23.81	3.00	34.77	PASS
	Middle	1	0	QPSK	26.13	1.57	25.55	3.00	34.77	PASS
		1	12		26.15	1.57	25.57	3.00	34.77	PASS
		1	24		25.64	1.57	25.06	3.00	34.77	PASS
		12	0		25.51	1.57	24.93	3.00	34.77	PASS
		12	6		25.55	1.57	24.97	3.00	34.77	PASS
		12	11		25.35	1.57	24.77	3.00	34.77	PASS
		25	0		25.50	1.57	24.92	3.00	34.77	PASS
		1	0	16QAM	25.31	1.57	24.73	3.00	34.77	PASS
		1	12		25.39	1.57	24.81	3.00	34.77	PASS
		1	24		24.93	1.57	24.35	3.00	34.77	PASS
		12	0		24.60	1.57	24.02	3.00	34.77	PASS
		12	6		24.68	1.57	24.10	3.00	34.77	PASS
		12	11		24.49	1.57	23.91	3.00	34.77	PASS
		25	0		24.49	1.57	23.91	3.00	34.77	PASS
	Highest	1	0	QPSK	25.82	1.57	25.24	3.00	34.77	PASS
		1	12		25.70	1.57	25.12	3.00	34.77	PASS
		1	24		26.00	1.57	25.42	3.00	34.77	PASS
		12	0		25.14	1.57	24.56	3.00	34.77	PASS
		12	6		25.24	1.57	24.66	3.00	34.77	PASS
		12	11		25.24	1.57	24.66	3.00	34.77	PASS
		25	0		25.28	1.57	24.70	3.00	34.77	PASS
		1	0	16QAM	25.22	1.57	24.64	3.00	34.77	PASS
		1	12		25.11	1.57	24.53	3.00	34.77	PASS
		1	24		25.28	1.57	24.70	3.00	34.77	PASS
		12	0		24.28	1.57	23.70	3.00	34.77	PASS
		12	6		24.23	1.57	23.65	3.00	34.77	PASS
		12	11		24.27	1.57	23.69	3.00	34.77	PASS
		25	0		24.13	1.57	23.55	3.00	34.77	PASS

Radiated Power (ERP) for LTE Band 17 /10M										
BW (MHz)	UL Channel	RB Size	RB offset	Modulation	Conduction AVG Power(dBm)	Ant Gain（dBi）	ERP (dBm)	ERP Limit(W)	ERP Limit(dBm)	Verdict
10	Lowest	1	0	QPSK	25.83	1.57	25.25	3.00	34.77	PASS
		1	24		26.02	1.57	25.44	3.00	34.77	PASS
		1	49		26.41	1.57	25.83	3.00	34.77	PASS
		25	0		25.11	1.57	24.53	3.00	34.77	PASS
		25	12		25.31	1.57	24.73	3.00	34.77	PASS
		25	24		25.11	1.57	24.53	3.00	34.77	PASS
		50	0		25.25	1.57	24.67	3.00	34.77	PASS
		1	0	16QAM	25.07	1.57	24.49	3.00	34.77	PASS
		1	24		25.32	1.57	24.74	3.00	34.77	PASS
		1	49		24.70	1.57	24.12	3.00	34.77	PASS
		25	0		24.14	1.57	23.56	3.00	34.77	PASS
		25	12		24.40	1.57	23.82	3.00	34.77	PASS
		25	24		24.20	1.57	23.62	3.00	34.77	PASS
		50	0		24.28	1.57	23.70	3.00	34.77	PASS
	Middle	1	0	QPSK	25.80	1.57	25.22	3.00	34.77	PASS
		1	24		25.97	1.57	25.39	3.00	34.77	PASS
		1	49		25.37	1.57	24.79	3.00	34.77	PASS
		25	0		25.10	1.57	24.52	3.00	34.77	PASS
		25	12		25.27	1.57	24.69	3.00	34.77	PASS
		25	24		24.96	1.57	24.38	3.00	34.77	PASS
		50	0		25.17	1.57	24.59	3.00	34.77	PASS
		1	0	16QAM	24.91	1.57	24.33	3.00	34.77	PASS
		1	24		25.17	1.57	24.59	3.00	34.77	PASS
		1	49		24.52	1.57	23.94	3.00	34.77	PASS
		25	0		24.10	1.57	23.52	3.00	34.77	PASS
		25	12		24.30	1.57	23.72	3.00	34.77	PASS
		25	24		24.00	1.57	23.42	3.00	34.77	PASS
		50	0		24.19	1.57	23.61	3.00	34.77	PASS
	Highest	1	0	QPSK	25.82	1.57	25.24	3.00	34.77	PASS
		1	24		25.77	1.57	25.19	3.00	34.77	PASS
		1	49		25.70	1.57	25.12	3.00	34.77	PASS
		25	0		25.25	1.57	24.67	3.00	34.77	PASS
		25	12		25.24	1.57	24.66	3.00	34.77	PASS
		25	24		24.95	1.57	24.37	3.00	34.77	PASS
		50	0		25.18	1.57	24.60	3.00	34.77	PASS
		1	0	16QAM	25.07	1.57	24.49	3.00	34.77	PASS
		1	24		25.19	1.57	24.61	3.00	34.77	PASS
		1	49		24.99	1.57	24.41	3.00	34.77	PASS
		25	0		24.22	1.57	23.64	3.00	34.77	PASS
		25	12		24.20	1.57	23.62	3.00	34.77	PASS
		25	24		23.93	1.57	23.35	3.00	34.77	PASS
		50	0		24.15	1.57	23.57	3.00	34.77	PASS

Radiated Power (EIRP) for LTE Band 25 /1.4M										
BW (MHz)	UL Channel	RB Size	RB offset	Modulation	Conduction AVG Power(dBm)	Ant Gain（dBi）	EIRP (dBm)	EIRP Limit(W)	EIRP Limit(dBm)	Verdict
1.4	Lowest	1	0	QPSK	24.71	1.52	26.23	2.00	33.01	PASS
		1	2		24.52	1.52	26.04	2.00	33.01	PASS
		1	5		24.62	1.52	26.14	2.00	33.01	PASS
		3	0		24.39	1.52	25.91	2.00	33.01	PASS
		3	1		24.44	1.52	25.96	2.00	33.01	PASS
		3	2		24.43	1.52	25.95	2.00	33.01	PASS
		6	0		23.56	1.52	25.08	2.00	33.01	PASS
		1	0	16QAM	24.03	1.52	25.55	2.00	33.01	PASS
		1	2		23.88	1.52	25.40	2.00	33.01	PASS
		1	5		23.96	1.52	25.48	2.00	33.01	PASS
		3	0		23.74	1.52	25.26	2.00	33.01	PASS
		3	1		23.72	1.52	25.24	2.00	33.01	PASS
		3	2		23.71	1.52	25.23	2.00	33.01	PASS
		6	0		22.74	1.52	24.26	2.00	33.01	PASS
	Middle	1	0	QPSK	24.66	1.52	26.18	2.00	33.01	PASS
		1	2		24.60	1.52	26.12	2.00	33.01	PASS
		1	5		24.62	1.52	26.14	2.00	33.01	PASS
		3	0		24.50	1.52	26.02	2.00	33.01	PASS
		3	1		24.51	1.52	26.03	2.00	33.01	PASS
		3	2		24.48	1.52	26.00	2.00	33.01	PASS
		6	0		23.66	1.52	25.18	2.00	33.01	PASS
		1	0	16QAM	23.73	1.52	25.25	2.00	33.01	PASS
		1	2		23.65	1.52	25.17	2.00	33.01	PASS
		1	5		23.65	1.52	25.17	2.00	33.01	PASS
		3	0		23.78	1.52	25.30	2.00	33.01	PASS
		3	1		23.73	1.52	25.25	2.00	33.01	PASS
		3	2		23.71	1.52	25.23	2.00	33.01	PASS
		6	0		22.90	1.52	24.42	2.00	33.01	PASS
	Highest	1	0	QPSK	24.59	1.52	26.11	2.00	33.01	PASS
		1	2		24.35	1.52	25.87	2.00	33.01	PASS
		1	5		24.06	1.52	25.58	2.00	33.01	PASS
		3	0		24.41	1.52	25.93	2.00	33.01	PASS
		3	1		24.33	1.52	25.85	2.00	33.01	PASS
		3	2		24.10	1.52	25.62	2.00	33.01	PASS
		6	0		23.60	1.52	25.12	2.00	33.01	PASS
		1	0	16QAM	23.86	1.52	25.38	2.00	33.01	PASS
		1	2		23.66	1.52	25.18	2.00	33.01	PASS
		1	5		23.38	1.52	24.90	2.00	33.01	PASS
		3	0		23.73	1.52	25.25	2.00	33.01	PASS
		3	1		23.65	1.52	25.17	2.00	33.01	PASS
		3	2		23.44	1.52	24.96	2.00	33.01	PASS
		6	0		23.02	1.52	24.54	2.00	33.01	PASS

Radiated Power (EIRP) for LTE Band 25 /3M										
BW (MHz)	UL Channel	RB Size	RB offset	Modulation	Conduction AVG Power(dBm)	Ant Gain（dBi）	EIRP (dBm)	EIRP Limit(W)	EIRP Limit(dBm)	Verdict
3	Lowest	1	0	QPSK	24.42	1.52	25.94	2.00	33.01	PASS
		1	7		24.49	1.52	26.01	2.00	33.01	PASS
		1	14		24.39	1.52	25.91	2.00	33.01	PASS
		8	0		23.54	1.52	25.06	2.00	33.01	PASS
		8	4		23.55	1.52	25.07	2.00	33.01	PASS
		8	7		23.53	1.52	25.05	2.00	33.01	PASS
		15	0		23.54	1.52	25.06	2.00	33.01	PASS
		1	0	16QAM	23.77	1.52	25.29	2.00	33.01	PASS
		1	7		23.79	1.52	25.31	2.00	33.01	PASS
		1	14		23.73	1.52	25.25	2.00	33.01	PASS
		8	0		22.75	1.52	24.27	2.00	33.01	PASS
		8	4		22.71	1.52	24.23	2.00	33.01	PASS
		8	7		22.69	1.52	24.21	2.00	33.01	PASS
		15	0		22.58	1.52	24.10	2.00	33.01	PASS
	Middle	1	0	QPSK	24.60	1.52	26.12	2.00	33.01	PASS
		1	7		24.51	1.52	26.03	2.00	33.01	PASS
		1	14		24.39	1.52	25.91	2.00	33.01	PASS
		8	0		23.75	1.52	25.27	2.00	33.01	PASS
		8	4		23.69	1.52	25.21	2.00	33.01	PASS
		8	7		23.65	1.52	25.17	2.00	33.01	PASS
		15	0		23.66	1.52	25.18	2.00	33.01	PASS
		1	0	16QAM	23.80	1.52	25.32	2.00	33.01	PASS
		1	7		23.76	1.52	25.28	2.00	33.01	PASS
		1	14		23.70	1.52	25.22	2.00	33.01	PASS
		8	0		22.97	1.52	24.49	2.00	33.01	PASS
		8	4		22.86	1.52	24.38	2.00	33.01	PASS
		8	7		22.82	1.52	24.34	2.00	33.01	PASS
		15	0		22.66	1.52	24.18	2.00	33.01	PASS
	Highest	1	0	QPSK	24.68	1.52	26.20	2.00	33.01	PASS
		1	7		24.69	1.52	26.21	2.00	33.01	PASS
		1	14		24.03	1.52	25.55	2.00	33.01	PASS
		8	0		24.06	1.52	25.58	2.00	33.01	PASS
		8	4		24.02	1.52	25.54	2.00	33.01	PASS
		8	7		23.75	1.52	25.27	2.00	33.01	PASS
		15	0		23.94	1.52	25.46	2.00	33.01	PASS
		1	0	16QAM	24.15	1.52	25.67	2.00	33.01	PASS
		1	7		24.17	1.52	25.69	2.00	33.01	PASS
		1	14		23.48	1.52	25.00	2.00	33.01	PASS
		8	0		23.17	1.52	24.69	2.00	33.01	PASS
		8	4		23.14	1.52	24.66	2.00	33.01	PASS
		8	7		22.89	1.52	24.41	2.00	33.01	PASS
		15	0		23.16	1.52	24.68	2.00	33.01	PASS

Radiated Power (EIRP) for LTE Band 25 /5M										
BW (MHz)	UL Channel	RB Size	RB offset	Modulation	Conduction AVG Power(dBm)	Ant Gain（dBi）	EIRP (dBm)	EIRP Limit(W)	EIRP Limit(dBm)	Verdict
5	Lowest	1	0	QPSK	24.46	1.52	25.98	2.00	33.01	PASS
		1	12		24.50	1.52	26.02	2.00	33.01	PASS
		1	24		24.44	1.52	25.96	2.00	33.01	PASS
		12	0		23.52	1.52	25.04	2.00	33.01	PASS
		12	6		23.63	1.52	25.15	2.00	33.01	PASS
		12	11		23.63	1.52	25.15	2.00	33.01	PASS
		25	0		23.57	1.52	25.09	2.00	33.01	PASS
		1	0	16QAM	23.89	1.52	25.41	2.00	33.01	PASS
		1	12		24.00	1.52	25.52	2.00	33.01	PASS
		1	24		23.96	1.52	25.48	2.00	33.01	PASS
		12	0		22.66	1.52	24.18	2.00	33.01	PASS
		12	6		22.72	1.52	24.24	2.00	33.01	PASS
		12	11		22.73	1.52	24.25	2.00	33.01	PASS
		25	0		22.70	1.52	24.22	2.00	33.01	PASS
	Middle	1	0	QPSK	24.74	1.52	26.26	2.00	33.01	PASS
		1	12		24.61	1.52	26.13	2.00	33.01	PASS
		1	24		24.46	1.52	25.98	2.00	33.01	PASS
		12	0		23.82	1.52	25.34	2.00	33.01	PASS
		12	6		23.72	1.52	25.24	2.00	33.01	PASS
		12	11		23.64	1.52	25.16	2.00	33.01	PASS
		25	0		23.67	1.52	25.19	2.00	33.01	PASS
		1	0	16QAM	24.00	1.52	25.52	2.00	33.01	PASS
		1	12		23.93	1.52	25.45	2.00	33.01	PASS
		1	24		23.82	1.52	25.34	2.00	33.01	PASS
		12	0		23.01	1.52	24.53	2.00	33.01	PASS
		12	6		22.98	1.52	24.50	2.00	33.01	PASS
		12	11		22.89	1.52	24.41	2.00	33.01	PASS
		25	0		22.81	1.52	24.33	2.00	33.01	PASS
	Highest	1	0	QPSK	24.43	1.52	25.95	2.00	33.01	PASS
		1	12		24.82	1.52	26.34	2.00	33.01	PASS
		1	24		24.13	1.52	25.65	2.00	33.01	PASS
		12	0		23.96	1.52	25.48	2.00	33.01	PASS
		12	6		24.14	1.52	25.66	2.00	33.01	PASS
		12	11		23.92	1.52	25.44	2.00	33.01	PASS
		25	0		23.98	1.52	25.50	2.00	33.01	PASS
		1	0	16QAM	23.73	1.52	25.25	2.00	33.01	PASS
		1	12		24.21	1.52	25.73	2.00	33.01	PASS
		1	24		23.45	1.52	24.97	2.00	33.01	PASS
		12	0		23.20	1.52	24.72	2.00	33.01	PASS
		12	6		23.40	1.52	24.92	2.00	33.01	PASS
		12	11		23.19	1.52	24.71	2.00	33.01	PASS
		25	0		23.11	1.52	24.63	2.00	33.01	PASS

Radiated Power (EIRP) for LTE Band 25 /10M										
BW (MHz)	UL Channel	RB Size	RB offset	Modulation	Conduction AVG Power(dBm)	Ant Gain（dBi）	EIRP (dBm)	EIRP Limit(W)	EIRP Limit(dBm)	Verdict
10	Lowest	1	0	QPSK	24.24	1.52	25.76	2.00	33.01	PASS
		1	24		24.42	1.52	25.94	2.00	33.01	PASS
		1	49		24.38	1.52	25.90	2.00	33.01	PASS
		25	0		23.40	1.52	24.92	2.00	33.01	PASS
		25	12		23.59	1.52	25.11	2.00	33.01	PASS
		25	24		23.59	1.52	25.11	2.00	33.01	PASS
		50	0		23.50	1.52	25.02	2.00	33.01	PASS
		1	0	16QAM	23.52	1.52	25.04	2.00	33.01	PASS
		1	24		23.78	1.52	25.30	2.00	33.01	PASS
		1	49		23.75	1.52	25.27	2.00	33.01	PASS
		25	0		22.62	1.52	24.14	2.00	33.01	PASS
		25	12		22.81	1.52	24.33	2.00	33.01	PASS
		25	24		22.82	1.52	24.34	2.00	33.01	PASS
		50	0		22.68	1.52	24.20	2.00	33.01	PASS
	Middle	1	0	QPSK	24.34	1.52	25.86	2.00	33.01	PASS
		1	24		24.51	1.52	26.03	2.00	33.01	PASS
		1	49		24.33	1.52	25.85	2.00	33.01	PASS
		25	0		23.66	1.52	25.18	2.00	33.01	PASS
		25	12		23.64	1.52	25.16	2.00	33.01	PASS
		25	24		23.45	1.52	24.97	2.00	33.01	PASS
		50	0		23.57	1.52	25.09	2.00	33.01	PASS
		1	0	16QAM	23.57	1.52	25.09	2.00	33.01	PASS
		1	24		23.76	1.52	25.28	2.00	33.01	PASS
		1	49		23.59	1.52	25.11	2.00	33.01	PASS
		25	0		22.81	1.52	24.33	2.00	33.01	PASS
		25	12		22.80	1.52	24.32	2.00	33.01	PASS
		25	24		22.65	1.52	24.17	2.00	33.01	PASS
		50	0		22.73	1.52	24.25	2.00	33.01	PASS
	Highest	1	0	QPSK	23.35	1.52	24.87	2.00	33.01	PASS
		1	24		24.33	1.52	25.85	2.00	33.01	PASS
		1	49		24.03	1.52	25.55	2.00	33.01	PASS
		25	0		22.74	1.52	24.26	2.00	33.01	PASS
		25	12		23.49	1.52	25.01	2.00	33.01	PASS
		25	24		23.74	1.52	25.26	2.00	33.01	PASS
		50	0		23.40	1.52	24.92	2.00	33.01	PASS
		1	0	16QAM	22.81	1.52	24.33	2.00	33.01	PASS
		1	24		23.77	1.52	25.29	2.00	33.01	PASS
		1	49		23.39	1.52	24.91	2.00	33.01	PASS
		25	0		21.85	1.52	23.37	2.00	33.01	PASS
		25	12		22.60	1.52	24.12	2.00	33.01	PASS
		25	24		22.86	1.52	24.38	2.00	33.01	PASS
		50	0		22.53	1.52	24.05	2.00	33.01	PASS

Radiated Power (EIRP) for LTE Band 25 /15M										
BW (MHz)	UL Channel	RB Size	RB offset	Modulation	Conduction AVG Power(dBm)	Ant Gain（dBi）	EIRP (dBm)	EIRP Limit(W)	EIRP Limit(dBm)	Verdict
15	Lowest	1	0	QPSK	24.46	1.52	25.98	2.00	33.01	PASS
		1	37		24.62	1.52	26.14	2.00	33.01	PASS
		1	74		24.78	1.52	26.30	2.00	33.01	PASS
		36	0		23.64	1.52	25.16	2.00	33.01	PASS
		36	18		23.84	1.52	25.36	2.00	33.01	PASS
		36	39		24.05	1.52	25.57	2.00	33.01	PASS
		75	0		23.83	1.52	25.35	2.00	33.01	PASS
		1	0	16QAM	23.71	1.52	25.23	2.00	33.01	PASS
		1	37		23.98	1.52	25.50	2.00	33.01	PASS
		1	74		24.20	1.52	25.72	2.00	33.01	PASS
		36	0		22.76	1.52	24.28	2.00	33.01	PASS
		36	18		23.02	1.52	24.54	2.00	33.01	PASS
		36	39		23.24	1.52	24.76	2.00	33.01	PASS
		75	0		23.00	1.52	24.52	2.00	33.01	PASS
	Middle	1	0	QPSK	24.74	1.52	26.26	2.00	33.01	PASS
		1	37		24.62	1.52	26.14	2.00	33.01	PASS
		1	74		24.78	1.52	26.30	2.00	33.01	PASS
		36	0		23.95	1.52	25.47	2.00	33.01	PASS
		36	18		23.82	1.52	25.34	2.00	33.01	PASS
		36	39		23.80	1.52	25.32	2.00	33.01	PASS
		75	0		23.86	1.52	25.38	2.00	33.01	PASS
		1	0	16QAM	23.99	1.52	25.51	2.00	33.01	PASS
		1	37		23.85	1.52	25.37	2.00	33.01	PASS
		1	74		24.06	1.52	25.58	2.00	33.01	PASS
		36	0		23.06	1.52	24.58	2.00	33.01	PASS
		36	18		22.95	1.52	24.47	2.00	33.01	PASS
		36	39		22.98	1.52	24.50	2.00	33.01	PASS
		75	0		22.97	1.52	24.49	2.00	33.01	PASS
	Highest	1	0	QPSK	24.41	1.52	25.93	2.00	33.01	PASS
		1	37		23.98	1.52	25.50	2.00	33.01	PASS
		1	74		24.48	1.52	26.00	2.00	33.01	PASS
		36	0		23.12	1.52	24.64	2.00	33.01	PASS
		36	18		23.16	1.52	24.68	2.00	33.01	PASS
		36	39		23.79	1.52	25.31	2.00	33.01	PASS
		75	0		23.44	1.52	24.96	2.00	33.01	PASS
		1	0	16QAM	23.58	1.52	25.10	2.00	33.01	PASS
		1	37		23.12	1.52	24.64	2.00	33.01	PASS
		1	74		23.62	1.52	25.14	2.00	33.01	PASS
		36	0		22.22	1.52	23.74	2.00	33.01	PASS
		36	18		22.32	1.52	23.84	2.00	33.01	PASS
		36	39		22.96	1.52	24.48	2.00	33.01	PASS
		75	0		22.63	1.52	24.15	2.00	33.01	PASS

Radiated Power (EIRP) for LTE Band 25 /20M										
BW (MHz)	UL Channel	RB Size	RB offset	Modulation	Conduction AVG Power(dBm)	Ant Gain（dBi）	EIRP (dBm)	EIRP Limit(W)	EIRP Limit(dBm)	Verdict
20	Lowest	1	0	QPSK	24.38	1.52	25.90	2.00	33.01	PASS
		1	49		24.75	1.52	26.27	2.00	33.01	PASS
		1	99		24.64	1.52	26.16	2.00	33.01	PASS
		50	0		23.69	1.52	25.21	2.00	33.01	PASS
		50	24		24.14	1.52	25.66	2.00	33.01	PASS
		50	49		24.13	1.52	25.65	2.00	33.01	PASS
		100	0		24.03	1.52	25.55	2.00	33.01	PASS
		1	0	16QAM	23.63	1.52	25.15	2.00	33.01	PASS
		1	49		24.09	1.52	25.61	2.00	33.01	PASS
		1	99		24.00	1.52	25.52	2.00	33.01	PASS
		50	0		22.86	1.52	24.38	2.00	33.01	PASS
		50	24		23.28	1.52	24.80	2.00	33.01	PASS
		50	49		23.27	1.52	24.79	2.00	33.01	PASS
		100	0		23.16	1.52	24.68	2.00	33.01	PASS
	Middle	1	0	QPSK	24.71	1.52	26.23	2.00	33.01	PASS
		1	49		24.69	1.52	26.21	2.00	33.01	PASS
		1	99		24.86	1.52	26.38	2.00	33.01	PASS
		50	0		23.89	1.52	25.41	2.00	33.01	PASS
		50	24		23.88	1.52	25.40	2.00	33.01	PASS
		50	49		23.87	1.52	25.39	2.00	33.01	PASS
		100	0		24.00	1.52	25.52	2.00	33.01	PASS
		1	0	16QAM	23.94	1.52	25.46	2.00	33.01	PASS
		1	49		23.91	1.52	25.43	2.00	33.01	PASS
		1	99		24.05	1.52	25.57	2.00	33.01	PASS
		50	0		23.05	1.52	24.57	2.00	33.01	PASS
		50	24		23.01	1.52	24.53	2.00	33.01	PASS
		50	49		23.04	1.52	24.56	2.00	33.01	PASS
		100	0		23.12	1.52	24.64	2.00	33.01	PASS
	Highest	1	0	QPSK	24.79	1.52	26.31	2.00	33.01	PASS
		1	49		24.00	1.52	25.52	2.00	33.01	PASS
		1	99		24.52	1.52	26.04	2.00	33.01	PASS
		50	0		23.62	1.52	25.14	2.00	33.01	PASS
		50	24		23.20	1.52	24.72	2.00	33.01	PASS
		50	49		23.51	1.52	25.03	2.00	33.01	PASS
		100	0		23.51	1.52	25.03	2.00	33.01	PASS
		1	0	16QAM	24.04	1.52	25.56	2.00	33.01	PASS
		1	49		23.15	1.52	24.67	2.00	33.01	PASS
		1	99		23.74	1.52	25.26	2.00	33.01	PASS
		50	0		22.75	1.52	24.27	2.00	33.01	PASS
		50	24		22.42	1.52	23.94	2.00	33.01	PASS
		50	49		22.69	1.52	24.21	2.00	33.01	PASS
		100	0		22.72	1.52	24.24	2.00	33.01	PASS

Part22

Radiated Power (ERP) for LTE Band 26 /1.4M										
BW (MHz)	UL Channel	RB Size	RB offset	Modulation	Conduction AVG Power(dBm)	Ant Gain（dBi）	ERP (dBm)	ERP Limit(W)	ERP Limit(dBm)	Verdict
1.4	Lowest	1	0	QPSK	24.37	2.67	24.89	7.00	38.45	PASS
		1	2		24.12	2.67	24.64	7.00	38.45	PASS
		1	5		24.21	2.67	24.73	7.00	38.45	PASS
		3	0		24.17	2.67	24.69	7.00	38.45	PASS
		3	1		24.08	2.67	24.60	7.00	38.45	PASS
		3	2		24.04	2.67	24.56	7.00	38.45	PASS
		6	0		23.00	2.67	23.52	7.00	38.45	PASS
		1	0	16QAM	23.13	2.67	23.65	7.00	38.45	PASS
		1	2		22.90	2.67	23.42	7.00	38.45	PASS
		1	5		22.98	2.67	23.50	7.00	38.45	PASS
		3	0		23.11	2.67	23.63	7.00	38.45	PASS
		3	1		23.02	2.67	23.54	7.00	38.45	PASS
		3	2		22.98	2.67	23.50	7.00	38.45	PASS
		6	0		22.12	2.67	22.64	7.00	38.45	PASS
	Middle	1	0	QPSK	25.13	2.67	25.65	7.00	38.45	PASS
		1	2		24.96	2.67	25.48	7.00	38.45	PASS
		1	5		24.97	2.67	25.49	7.00	38.45	PASS
		3	0		24.98	2.67	25.50	7.00	38.45	PASS
		3	1		24.94	2.67	25.46	7.00	38.45	PASS
		3	2		24.83	2.67	25.35	7.00	38.45	PASS
		6	0		23.96	2.67	24.48	7.00	38.45	PASS
		1	0	16QAM	24.20	2.67	24.72	7.00	38.45	PASS
		1	2		24.07	2.67	24.59	7.00	38.45	PASS
		1	5		24.07	2.67	24.59	7.00	38.45	PASS
		3	0		24.11	2.67	24.63	7.00	38.45	PASS
		3	1		24.07	2.67	24.59	7.00	38.45	PASS
		3	2		23.96	2.67	24.48	7.00	38.45	PASS
		6	0		23.23	2.67	23.75	7.00	38.45	PASS
	Highest	1	0	QPSK	24.44	2.67	24.96	7.00	38.45	PASS
		1	2		24.01	2.67	24.53	7.00	38.45	PASS
		1	5		23.53	2.67	24.05	7.00	38.45	PASS
		3	0		24.10	2.67	24.62	7.00	38.45	PASS
		3	1		23.93	2.67	24.45	7.00	38.45	PASS
		3	2		23.57	2.67	24.09	7.00	38.45	PASS
		6	0		22.94	2.67	23.46	7.00	38.45	PASS
		1	0	16QAM	23.78	2.67	24.30	7.00	38.45	PASS
		1	2		23.30	2.67	23.82	7.00	38.45	PASS
		1	5		22.93	2.67	23.45	7.00	38.45	PASS
		3	0		23.35	2.67	23.87	7.00	38.45	PASS
		3	1		23.20	2.67	23.72	7.00	38.45	PASS
		3	2		22.84	2.67	23.36	7.00	38.45	PASS
		6	0		22.21	2.67	22.73	7.00	38.45	PASS

Radiated Power (ERP) for LTE Band 26 /3M										
BW (MHz)	UL Channel	RB Size	RB offset	Modulation	Conduction AVG Power(dBm)	Ant Gain（dBi）	ERP (dBm)	ERP Limit(W)	ERP Limit(dBm)	Verdict
3	Lowest	1	0	QPSK	24.07	2.67	24.59	7.00	38.45	PASS
		1	7		23.98	2.67	24.50	7.00	38.45	PASS
		1	14		23.91	2.67	24.43	7.00	38.45	PASS
		8	0		22.96	2.67	23.48	7.00	38.45	PASS
		8	4		22.89	2.67	23.41	7.00	38.45	PASS
		8	7		22.91	2.67	23.43	7.00	38.45	PASS
		15	0		22.92	2.67	23.44	7.00	38.45	PASS
		1	0	16QAM	23.27	2.67	23.79	7.00	38.45	PASS
		1	7		23.18	2.67	23.70	7.00	38.45	PASS
		1	14		23.12	2.67	23.64	7.00	38.45	PASS
		8	0		22.05	2.67	22.57	7.00	38.45	PASS
		8	4		22.03	2.67	22.55	7.00	38.45	PASS
		8	7		22.03	2.67	22.55	7.00	38.45	PASS
		15	0		21.90	2.67	22.42	7.00	38.45	PASS
	Middle	1	0	QPSK	25.02	2.67	25.54	7.00	38.45	PASS
		1	7		24.94	2.67	25.46	7.00	38.45	PASS
		1	14		24.55	2.67	25.07	7.00	38.45	PASS
		8	0		24.10	2.67	24.62	7.00	38.45	PASS
		8	4		24.02	2.67	24.54	7.00	38.45	PASS
		8	7		23.81	2.67	24.33	7.00	38.45	PASS
		15	0		23.95	2.67	24.47	7.00	38.45	PASS
		1	0	16QAM	24.11	2.67	24.63	7.00	38.45	PASS
		1	7		24.08	2.67	24.60	7.00	38.45	PASS
		1	14		23.69	2.67	24.21	7.00	38.45	PASS
		8	0		23.21	2.67	23.73	7.00	38.45	PASS
		8	4		23.14	2.67	23.66	7.00	38.45	PASS
		8	7		22.92	2.67	23.44	7.00	38.45	PASS
		15	0		22.90	2.67	23.42	7.00	38.45	PASS
	Highest	1	0	QPSK	25.25	2.67	25.77	7.00	38.45	PASS
		1	7		24.68	2.67	25.20	7.00	38.45	PASS
		1	14		23.38	2.67	23.90	7.00	38.45	PASS
		8	0		24.06	2.67	24.58	7.00	38.45	PASS
		8	4		23.76	2.67	24.28	7.00	38.45	PASS
		8	7		23.12	2.67	23.64	7.00	38.45	PASS
		15	0		23.62	2.67	24.14	7.00	38.45	PASS
		1	0	16QAM	24.53	2.67	25.05	7.00	38.45	PASS
		1	7		23.98	2.67	24.50	7.00	38.45	PASS
		1	14		22.74	2.67	23.26	7.00	38.45	PASS
		8	0		23.15	2.67	23.67	7.00	38.45	PASS
		8	4		22.88	2.67	23.40	7.00	38.45	PASS
		8	7		22.27	2.67	22.79	7.00	38.45	PASS
		15	0		22.86	2.67	23.38	7.00	38.45	PASS

Radiated Power (ERP) for LTE Band 26 /5M										
BW (MHz)	UL Channel	RB Size	RB offset	Modulation	Conduction AVG Power(dBm)	Ant Gain（dBi）	ERP (dBm)	ERP Limit(W)	ERP Limit(dBm)	Verdict
5	Lowest	1	0	QPSK	24.06	2.67	24.58	7.00	38.45	PASS
		1	12		23.98	2.67	24.50	7.00	38.45	PASS
		1	24		24.18	2.67	24.70	7.00	38.45	PASS
		12	0		22.98	2.67	23.50	7.00	38.45	PASS
		12	6		22.96	2.67	23.48	7.00	38.45	PASS
		12	11		23.04	2.67	23.56	7.00	38.45	PASS
		25	0		22.99	2.67	23.51	7.00	38.45	PASS
		1	0	16QAM	23.32	2.67	23.84	7.00	38.45	PASS
		1	12		23.33	2.67	23.85	7.00	38.45	PASS
		1	24		23.50	2.67	24.02	7.00	38.45	PASS
		12	0		21.96	2.67	22.48	7.00	38.45	PASS
		12	6		22.01	2.67	22.53	7.00	38.45	PASS
		12	11		22.05	2.67	22.57	7.00	38.45	PASS
		25	0		22.00	2.67	22.52	7.00	38.45	PASS
	Middle	1	0	QPSK	24.91	2.67	25.43	7.00	38.45	PASS
		1	12		24.99	2.67	25.51	7.00	38.45	PASS
		1	24		24.36	2.67	24.88	7.00	38.45	PASS
		12	0		23.99	2.67	24.51	7.00	38.45	PASS
		12	6		24.04	2.67	24.56	7.00	38.45	PASS
		12	11		23.68	2.67	24.20	7.00	38.45	PASS
		25	0		23.87	2.67	24.39	7.00	38.45	PASS
		1	0	16QAM	24.04	2.67	24.56	7.00	38.45	PASS
		1	12		24.21	2.67	24.73	7.00	38.45	PASS
		1	24		23.59	2.67	24.11	7.00	38.45	PASS
		12	0		23.16	2.67	23.68	7.00	38.45	PASS
		12	6		23.16	2.67	23.68	7.00	38.45	PASS
		12	11		22.86	2.67	23.38	7.00	38.45	PASS
		25	0		22.89	2.67	23.41	7.00	38.45	PASS
	Highest	1	0	QPSK	24.88	2.67	25.40	7.00	38.45	PASS
		1	12		25.34	2.67	25.86	7.00	38.45	PASS
		1	24		23.52	2.67	24.04	7.00	38.45	PASS
		12	0		24.12	2.67	24.64	7.00	38.45	PASS
		12	6		24.24	2.67	24.76	7.00	38.45	PASS
		12	11		23.52	2.67	24.04	7.00	38.45	PASS
		25	0		23.87	2.67	24.39	7.00	38.45	PASS
		1	0	16QAM	23.99	2.67	24.51	7.00	38.45	PASS
		1	12		24.46	2.67	24.98	7.00	38.45	PASS
		1	24		22.74	2.67	23.26	7.00	38.45	PASS
		12	0		23.30	2.67	23.82	7.00	38.45	PASS
		12	6		23.44	2.67	23.96	7.00	38.45	PASS
		12	11		22.79	2.67	23.31	7.00	38.45	PASS
		25	0		22.98	2.67	23.50	7.00	38.45	PASS

Radiated Power (ERP) for LTE Band 26 /10M										
BW (MHz)	UL Channel	RB Size	RB offset	Modulation	Conduction AVG Power(dBm)	Ant Gain（dBi）	ERP (dBm)	ERP Limit(W)	ERP Limit(dBm)	Verdict
10	Lowest	1	0	QPSK	23.78	2.67	24.30	7.00	38.45	PASS
		1	24		24.07	2.67	24.59	7.00	38.45	PASS
		1	49		24.70	2.67	25.22	7.00	38.45	PASS
		25	0		22.72	2.67	23.24	7.00	38.45	PASS
		25	12		23.16	2.67	23.68	7.00	38.45	PASS
		25	24		23.47	2.67	23.99	7.00	38.45	PASS
		50	0		23.15	2.67	23.67	7.00	38.45	PASS
		1	0	16QAM	22.88	2.67	23.40	7.00	38.45	PASS
		1	24		23.24	2.67	23.76	7.00	38.45	PASS
		1	49		23.91	2.67	24.43	7.00	38.45	PASS
		25	0		21.77	2.67	22.29	7.00	38.45	PASS
		25	12		22.21	2.67	22.73	7.00	38.45	PASS
		25	24		22.53	2.67	23.05	7.00	38.45	PASS
		50	0		22.16	2.67	22.68	7.00	38.45	PASS
	Middle	1	0	QPSK	24.46	2.67	24.98	7.00	38.45	PASS
		1	24		24.83	2.67	25.35	7.00	38.45	PASS
		1	49		23.75	2.67	24.27	7.00	38.45	PASS
		25	0		23.68	2.67	24.20	7.00	38.45	PASS
		25	12		23.73	2.67	24.25	7.00	38.45	PASS
		25	24		23.12	2.67	23.64	7.00	38.45	PASS
		50	0		23.41	2.67	23.93	7.00	38.45	PASS
		1	0	16QAM	23.49	2.67	24.01	7.00	38.45	PASS
		1	24		23.94	2.67	24.46	7.00	38.45	PASS
		1	49		22.85	2.67	23.37	7.00	38.45	PASS
		25	0		22.73	2.67	23.25	7.00	38.45	PASS
		25	12		22.85	2.67	23.37	7.00	38.45	PASS
		25	24		22.24	2.67	22.76	7.00	38.45	PASS
		50	0		22.54	2.67	23.06	7.00	38.45	PASS
	Highest	1	0	QPSK	23.91	2.67	24.43	7.00	38.45	PASS
		1	24		24.52	2.67	25.04	7.00	38.45	PASS
		1	49		23.49	2.67	24.01	7.00	38.45	PASS
		25	0		22.92	2.67	23.44	7.00	38.45	PASS
		25	12		23.54	2.67	24.06	7.00	38.45	PASS
		25	24		23.63	2.67	24.15	7.00	38.45	PASS
		50	0		23.35	2.67	23.87	7.00	38.45	PASS
		1	0	16QAM	23.15	2.67	23.67	7.00	38.45	PASS
		1	24		23.78	2.67	24.30	7.00	38.45	PASS
		1	49		22.82	2.67	23.34	7.00	38.45	PASS
		25	0		21.98	2.67	22.50	7.00	38.45	PASS
		25	12		22.59	2.67	23.11	7.00	38.45	PASS
		25	24		22.72	2.67	23.24	7.00	38.45	PASS
		50	0		22.44	2.67	22.96	7.00	38.45	PASS

Radiated Power (ERP) for LTE Band 26 /15M										
BW (MHz)	UL Channel	RB Size	RB offset	Modulation	Conduction AVG Power(dBm)	Ant Gain（dBi）	ERP (dBm)	ERP Limit(W)	ERP Limit(dBm)	Verdict
15	Lowest	1	0	QPSK	24.04	2.67	24.56	7.00	38.45	PASS
		1	24		24.75	2.67	25.27	7.00	38.45	PASS
		1	49		24.52	2.67	25.04	7.00	38.45	PASS
		25	0		23.23	2.67	23.75	7.00	38.45	PASS
		25	12		23.78	2.67	24.30	7.00	38.45	PASS
		25	24		23.89	2.67	24.41	7.00	38.45	PASS
		50	0		23.55	2.67	24.07	7.00	38.45	PASS
		1	0	16QAM	23.13	2.67	23.65	7.00	38.45	PASS
		1	24		23.93	2.67	24.45	7.00	38.45	PASS
		1	49		23.77	2.67	24.29	7.00	38.45	PASS
		25	0		22.22	2.67	22.74	7.00	38.45	PASS
		25	12		22.80	2.67	23.32	7.00	38.45	PASS
		25	24		22.96	2.67	23.48	7.00	38.45	PASS
		50	0		22.55	2.67	23.07	7.00	38.45	PASS
	Middle	1	0	QPSK	24.36	2.67	24.88	7.00	38.45	PASS
		1	24		25.04	2.67	25.56	7.00	38.45	PASS
		1	49		24.38	2.67	24.90	7.00	38.45	PASS
		25	0		23.81	2.67	24.33	7.00	38.45	PASS
		25	12		23.94	2.67	24.46	7.00	38.45	PASS
		25	24		23.35	2.67	23.87	7.00	38.45	PASS
		50	0		23.51	2.67	24.03	7.00	38.45	PASS
		1	0	16QAM	23.41	2.67	23.93	7.00	38.45	PASS
		1	24		24.15	2.67	24.67	7.00	38.45	PASS
		1	49		23.43	2.67	23.95	7.00	38.45	PASS
		25	0		22.89	2.67	23.41	7.00	38.45	PASS
		25	12		23.00	2.67	23.52	7.00	38.45	PASS
		25	24		22.46	2.67	22.98	7.00	38.45	PASS
		50	0		22.55	2.67	23.07	7.00	38.45	PASS
	Highest	1	0	QPSK	25.36	2.67	25.88	7.00	38.45	PASS
		1	24		24.29	2.67	24.81	7.00	38.45	PASS
		1	49		24.02	2.67	24.54	7.00	38.45	PASS
		25	0		23.59	2.67	24.11	7.00	38.45	PASS
		25	12		23.42	2.67	23.94	7.00	38.45	PASS
		25	24		23.79	2.67	24.31	7.00	38.45	PASS
		50	0		23.71	2.67	24.23	7.00	38.45	PASS
		1	0	16QAM	24.09	2.67	24.61	7.00	38.45	PASS
		1	24		23.34	2.67	23.86	7.00	38.45	PASS
		1	49		23.19	2.67	23.71	7.00	38.45	PASS
		25	0		22.69	2.67	23.21	7.00	38.45	PASS
		25	12		22.52	2.67	23.04	7.00	38.45	PASS
		25	24		22.89	2.67	23.41	7.00	38.45	PASS
		50	0		22.85	2.67	23.37	7.00	38.45	PASS

Part90

Radiated Power (ERP) for LTE Band 26 /1.4M										
BW (MHz)	UL Channel	RB Size	RB offset	Modulation	Conduction AVG Power(dBm)	Ant Gain（dBi）	ERP (dBm)	ERP Limit(W)	ERP Limit(dBm)	Verdict
1.4	Lowest	1	0	QPSK	23.94	2.67	24.46	100.00	50.00	PASS
		1	2		23.96	2.67	24.48	100.00	50.00	PASS
		1	5		24.35	2.67	24.87	100.00	50.00	PASS
		3	0		23.81	2.67	24.33	100.00	50.00	PASS
		3	1		23.93	2.67	24.45	100.00	50.00	PASS
		3	2		24.13	2.67	24.65	100.00	50.00	PASS
		6	0		22.98	2.67	23.50	100.00	50.00	PASS
		1	0	16QAM	22.88	2.67	23.40	100.00	50.00	PASS
		1	2		22.96	2.67	23.48	100.00	50.00	PASS
		1	5		23.39	2.67	23.91	100.00	50.00	PASS
		3	0		22.84	2.67	23.36	100.00	50.00	PASS
		3	1		22.96	2.67	23.48	100.00	50.00	PASS
		3	2		23.17	2.67	23.69	100.00	50.00	PASS
		6	0		22.22	2.67	22.74	100.00	50.00	PASS
	Middle	1	0	QPSK	24.85	2.67	25.37	100.00	50.00	PASS
		1	2		24.69	2.67	25.21	100.00	50.00	PASS
		1	5		24.65	2.67	25.17	100.00	50.00	PASS
		3	0		24.64	2.67	25.16	100.00	50.00	PASS
		3	1		24.57	2.67	25.09	100.00	50.00	PASS
		3	2		24.51	2.67	25.03	100.00	50.00	PASS
		6	0		23.64	2.67	24.16	100.00	50.00	PASS
		1	0	16QAM	24.12	2.67	24.64	100.00	50.00	PASS
		1	2		24.00	2.67	24.52	100.00	50.00	PASS
		1	5		23.98	2.67	24.50	100.00	50.00	PASS
		3	0		23.79	2.67	24.31	100.00	50.00	PASS
		3	1		23.83	2.67	24.35	100.00	50.00	PASS
		3	2		23.68	2.67	24.20	100.00	50.00	PASS
		6	0		22.75	2.67	23.27	100.00	50.00	PASS
	Highest	1	0	QPSK	24.16	2.67	24.68	100.00	50.00	PASS
		1	2		24.12	2.67	24.64	100.00	50.00	PASS
		1	5		24.31	2.67	24.83	100.00	50.00	PASS
		3	0		23.97	2.67	24.49	100.00	50.00	PASS
		3	1		24.00	2.67	24.52	100.00	50.00	PASS
		3	2		23.97	2.67	24.49	100.00	50.00	PASS
		6	0		22.92	2.67	23.44	100.00	50.00	PASS
		1	0	16QAM	22.94	2.67	23.46	100.00	50.00	PASS
		1	2		22.87	2.67	23.39	100.00	50.00	PASS
		1	5		23.11	2.67	23.63	100.00	50.00	PASS
		3	0		22.97	2.67	23.49	100.00	50.00	PASS
		3	1		23.04	2.67	23.56	100.00	50.00	PASS
		3	2		23.06	2.67	23.58	100.00	50.00	PASS
		6	0		22.12	2.67	22.64	100.00	50.00	PASS

Radiated Power (ERP) for LTE Band 26 /3M										
BW (MHz)	UL Channel	RB Size	RB offset	Modulation	Conduction AVG Power(dBm)	Ant Gain（dBi）	ERP (dBm)	ERP Limit(W)	ERP Limit(dBm)	Verdict
3	Lowest	1	0	QPSK	23.78	2.67	24.30	100.00	50.00	PASS
		1	7		24.44	2.67	24.96	100.00	50.00	PASS
		1	14		24.78	2.67	25.30	100.00	50.00	PASS
		8	0		23.18	2.67	23.70	100.00	50.00	PASS
		8	4		23.45	2.67	23.97	100.00	50.00	PASS
		8	7		23.67	2.67	24.19	100.00	50.00	PASS
		15	0		23.41	2.67	23.93	100.00	50.00	PASS
		1	0	16QAM	22.98	2.67	23.50	100.00	50.00	PASS
		1	7		23.68	2.67	24.20	100.00	50.00	PASS
		1	14		23.96	2.67	24.48	100.00	50.00	PASS
		8	0		22.23	2.67	22.75	100.00	50.00	PASS
		8	4		22.55	2.67	23.07	100.00	50.00	PASS
		8	7		22.79	2.67	23.31	100.00	50.00	PASS
		15	0		22.41	2.67	22.93	100.00	50.00	PASS
	Middle	1	0	QPSK	24.75	2.67	25.27	100.00	50.00	PASS
		1	7		24.65	2.67	25.17	100.00	50.00	PASS
		1	14		24.26	2.67	24.78	100.00	50.00	PASS
		8	0		23.70	2.67	24.22	100.00	50.00	PASS
		8	4		23.66	2.67	24.18	100.00	50.00	PASS
		8	7		23.50	2.67	24.02	100.00	50.00	PASS
		15	0		23.57	2.67	24.09	100.00	50.00	PASS
		1	0	16QAM	23.72	2.67	24.24	100.00	50.00	PASS
		1	7		23.69	2.67	24.21	100.00	50.00	PASS
		1	14		23.32	2.67	23.84	100.00	50.00	PASS
		8	0		22.77	2.67	23.29	100.00	50.00	PASS
		8	4		22.73	2.67	23.25	100.00	50.00	PASS
		8	7		22.58	2.67	23.10	100.00	50.00	PASS
		15	0		22.47	2.67	22.99	100.00	50.00	PASS
	Highest	1	0	QPSK	24.15	2.67	24.67	100.00	50.00	PASS
		1	7		24.07	2.67	24.59	100.00	50.00	PASS
		1	14		24.14	2.67	24.66	100.00	50.00	PASS
		8	0		22.97	2.67	23.49	100.00	50.00	PASS
		8	4		22.97	2.67	23.49	100.00	50.00	PASS
		8	7		22.98	2.67	23.50	100.00	50.00	PASS
		15	0		22.95	2.67	23.47	100.00	50.00	PASS
		1	0	16QAM	23.29	2.67	23.81	100.00	50.00	PASS
		1	7		23.25	2.67	23.77	100.00	50.00	PASS
		1	14		23.34	2.67	23.86	100.00	50.00	PASS
		8	0		21.95	2.67	22.47	100.00	50.00	PASS
		8	4		21.91	2.67	22.43	100.00	50.00	PASS
		8	7		21.91	2.67	22.43	100.00	50.00	PASS
		15	0		22.02	2.67	22.54	100.00	50.00	PASS

Radiated Power (ERP) for LTE Band 26 /5M										
BW (MHz)	UL Channel	RB Size	RB offset	Modulation	Conduction AVG Power(dBm)	Ant Gain（dBi）	ERP (dBm)	ERP Limit(W)	ERP Limit(dBm)	Verdict
5	Lowest	1	0	QPSK	23.76	2.67	24.28	100.00	50.00	PASS
		1	12		24.70	2.67	25.22	100.00	50.00	PASS
		1	24		24.66	2.67	25.18	100.00	50.00	PASS
		12	0		23.30	2.67	23.82	100.00	50.00	PASS
		12	6		23.63	2.67	24.15	100.00	50.00	PASS
		12	11		23.69	2.67	24.21	100.00	50.00	PASS
		25	0		23.59	2.67	24.11	100.00	50.00	PASS
		1	0	16QAM	23.20	2.67	23.72	100.00	50.00	PASS
		1	12		24.14	2.67	24.66	100.00	50.00	PASS
		1	24		24.03	2.67	24.55	100.00	50.00	PASS
		12	0		22.30	2.67	22.82	100.00	50.00	PASS
		12	6		22.75	2.67	23.27	100.00	50.00	PASS
		12	11		22.83	2.67	23.35	100.00	50.00	PASS
		25	0		22.69	2.67	23.21	100.00	50.00	PASS
	Middle	1	0	QPSK	24.69	2.67	25.21	100.00	50.00	PASS
		1	12		24.71	2.67	25.23	100.00	50.00	PASS
		1	24		24.10	2.67	24.62	100.00	50.00	PASS
		12	0		23.73	2.67	24.25	100.00	50.00	PASS
		12	6		23.70	2.67	24.22	100.00	50.00	PASS
		12	11		23.27	2.67	23.79	100.00	50.00	PASS
		25	0		23.51	2.67	24.03	100.00	50.00	PASS
		1	0	16QAM	23.81	2.67	24.33	100.00	50.00	PASS
		1	12		23.85	2.67	24.37	100.00	50.00	PASS
		1	24		23.18	2.67	23.70	100.00	50.00	PASS
		12	0		22.83	2.67	23.35	100.00	50.00	PASS
		12	6		22.81	2.67	23.33	100.00	50.00	PASS
		12	11		22.40	2.67	22.92	100.00	50.00	PASS
		25	0		22.54	2.67	23.06	100.00	50.00	PASS
	Highest	1	0	QPSK	24.63	2.67	25.15	100.00	50.00	PASS
		1	12		24.17	2.67	24.69	100.00	50.00	PASS
		1	24		24.19	2.67	24.71	100.00	50.00	PASS
		12	0		23.17	2.67	23.69	100.00	50.00	PASS
		12	6		23.01	2.67	23.53	100.00	50.00	PASS
		12	11		22.93	2.67	23.45	100.00	50.00	PASS
		25	0		23.09	2.67	23.61	100.00	50.00	PASS
		1	0	16QAM	23.59	2.67	24.11	100.00	50.00	PASS
		1	12		23.22	2.67	23.74	100.00	50.00	PASS
		1	24		23.17	2.67	23.69	100.00	50.00	PASS
		12	0		22.31	2.67	22.83	100.00	50.00	PASS
		12	6		22.14	2.67	22.66	100.00	50.00	PASS
		12	11		21.98	2.67	22.50	100.00	50.00	PASS
		25	0		22.06	2.67	22.58	100.00	50.00	PASS

Radiated Power (ERP) for LTE Band 26 /10M										
BW (MHz)	UL Channel	RB Size	RB offset	Modulation	Conduction AVG Power(dBm)	Ant Gain（dBi）	ERP (dBm)	ERP Limit(W)	ERP Limit(dBm)	Verdict
10	Middle	1	0	QPSK	23.65	2.67	24.17	100.00	50.00	PASS
		1	24		24.91	2.67	25.43	100.00	50.00	PASS
		1	49		23.77	2.67	24.29	100.00	50.00	PASS
		25	0		23.20	2.67	23.72	100.00	50.00	PASS
		25	12		23.36	2.67	23.88	100.00	50.00	PASS
		25	24		22.86	2.67	23.38	100.00	50.00	PASS
		50	0		23.07	2.67	23.59	100.00	50.00	PASS
		1	0	16QAM	22.75	2.67	23.27	100.00	50.00	PASS
		1	24		23.71	2.67	24.23	100.00	50.00	PASS
		1	49		22.89	2.67	23.41	100.00	50.00	PASS
		25	0		22.32	2.67	22.84	100.00	50.00	PASS
		25	12		22.56	2.67	23.08	100.00	50.00	PASS
		25	24		21.98	2.67	22.50	100.00	50.00	PASS
		50	0		22.12	2.67	22.64	100.00	50.00	PASS

Radiated Power (EIRP) for LTE Band 66 /1.4M										
BW (MHz)	UL Channel	RB Size	RB offset	Modulation	Conduction AVG Power(dBm)	Ant Gain（dBi）	EIRP (dBm)	EIRP Limit(W)	EIRP Limit(dBm)	Verdict
1.4	Lowest	1	0	QPSK	22.81	0.5	23.31	1.00	30.00	PASS
		1	2		22.73	0.5	23.23	1.00	30.00	PASS
		1	5		22.77	0.5	23.27	1.00	30.00	PASS
		3	0		22.70	0.5	23.20	1.00	30.00	PASS
		3	1		22.70	0.5	23.20	1.00	30.00	PASS
		3	2		22.69	0.5	23.19	1.00	30.00	PASS
		6	0		21.83	0.5	22.33	1.00	30.00	PASS
		1	0	16QAM	21.97	0.5	22.47	1.00	30.00	PASS
		1	2		21.83	0.5	22.33	1.00	30.00	PASS
		1	5		21.94	0.5	22.44	1.00	30.00	PASS
		3	0		21.82	0.5	22.32	1.00	30.00	PASS
		3	1		21.82	0.5	22.32	1.00	30.00	PASS
		3	2		21.82	0.5	22.32	1.00	30.00	PASS
		6	0		21.14	0.5	21.64	1.00	30.00	PASS
	Middle	1	0	QPSK	23.29	0.5	23.79	1.00	30.00	PASS
		1	2		23.14	0.5	23.64	1.00	30.00	PASS
		1	5		23.27	0.5	23.77	1.00	30.00	PASS
		3	0		23.17	0.5	23.67	1.00	30.00	PASS
		3	1		23.19	0.5	23.69	1.00	30.00	PASS
		3	2		23.17	0.5	23.67	1.00	30.00	PASS
		6	0		22.40	0.5	22.90	1.00	30.00	PASS
		1	0	16QAM	22.73	0.5	23.23	1.00	30.00	PASS
		1	2		22.60	0.5	23.10	1.00	30.00	PASS
		1	5		22.65	0.5	23.15	1.00	30.00	PASS
		3	0		22.55	0.5	23.05	1.00	30.00	PASS
		3	1		22.56	0.5	23.06	1.00	30.00	PASS
		3	2		22.52	0.5	23.02	1.00	30.00	PASS
		6	0		21.60	0.5	22.10	1.00	30.00	PASS
	Highest	1	0	QPSK	22.99	0.5	23.49	1.00	30.00	PASS
		1	2		22.74	0.5	23.24	1.00	30.00	PASS
		1	5		22.74	0.5	23.24	1.00	30.00	PASS
		3	0		22.70	0.5	23.20	1.00	30.00	PASS
		3	1		22.66	0.5	23.16	1.00	30.00	PASS
		3	2		22.55	0.5	23.05	1.00	30.00	PASS
		6	0		21.78	0.5	22.28	1.00	30.00	PASS
		1	0	16QAM	21.93	0.5	22.43	1.00	30.00	PASS
		1	2		21.74	0.5	22.24	1.00	30.00	PASS
		1	5		21.69	0.5	22.19	1.00	30.00	PASS
		3	0		21.90	0.5	22.40	1.00	30.00	PASS
		3	1		21.86	0.5	22.36	1.00	30.00	PASS
		3	2		21.76	0.5	22.26	1.00	30.00	PASS
		6	0		21.12	0.5	21.62	1.00	30.00	PASS

Radiated Power (EIRP) for LTE Band 66 /3M										
BW (MHz)	UL Channel	RB Size	RB offset	Modulation	Conduction AVG Power(dBm)	Ant Gain（dBi）	EIRP (dBm)	EIRP Limit(W)	EIRP Limit(dBm)	Verdict
3	Lowest	1	0	QPSK	22.61	0.5	23.11	1.00	30.00	PASS
		1	7		22.61	0.5	23.11	1.00	30.00	PASS
		1	14		22.50	0.5	23.00	1.00	30.00	PASS
		8	0		21.79	0.5	22.29	1.00	30.00	PASS
		8	4		21.83	0.5	22.33	1.00	30.00	PASS
		8	7		21.74	0.5	22.24	1.00	30.00	PASS
		15	0		21.80	0.5	22.30	1.00	30.00	PASS
		1	0	16QAM	21.95	0.5	22.45	1.00	30.00	PASS
		1	7		21.97	0.5	22.47	1.00	30.00	PASS
		1	14		21.81	0.5	22.31	1.00	30.00	PASS
		8	0		21.00	0.5	21.50	1.00	30.00	PASS
		8	4		21.03	0.5	21.53	1.00	30.00	PASS
		8	7		20.91	0.5	21.41	1.00	30.00	PASS
		15	0		20.90	0.5	21.40	1.00	30.00	PASS
	Middle	1	0	QPSK	23.16	0.5	23.66	1.00	30.00	PASS
		1	7		23.11	0.5	23.61	1.00	30.00	PASS
		1	14		22.97	0.5	23.47	1.00	30.00	PASS
		8	0		22.41	0.5	22.91	1.00	30.00	PASS
		8	4		22.39	0.5	22.89	1.00	30.00	PASS
		8	7		22.35	0.5	22.85	1.00	30.00	PASS
		15	0		22.36	0.5	22.86	1.00	30.00	PASS
		1	0	16QAM	22.35	0.5	22.85	1.00	30.00	PASS
		1	7		22.35	0.5	22.85	1.00	30.00	PASS
		1	14		22.22	0.5	22.72	1.00	30.00	PASS
		8	0		21.58	0.5	22.08	1.00	30.00	PASS
		8	4		21.56	0.5	22.06	1.00	30.00	PASS
		8	7		21.52	0.5	22.02	1.00	30.00	PASS
		15	0		21.36	0.5	21.86	1.00	30.00	PASS
	Highest	1	0	QPSK	23.06	0.5	23.56	1.00	30.00	PASS
		1	7		22.85	0.5	23.35	1.00	30.00	PASS
		1	14		22.48	0.5	22.98	1.00	30.00	PASS
		8	0		22.12	0.5	22.62	1.00	30.00	PASS
		8	4		22.02	0.5	22.52	1.00	30.00	PASS
		8	7		21.82	0.5	22.32	1.00	30.00	PASS
		15	0		21.97	0.5	22.47	1.00	30.00	PASS
		1	0	16QAM	22.53	0.5	23.03	1.00	30.00	PASS
		1	7		22.28	0.5	22.78	1.00	30.00	PASS
		1	14		21.96	0.5	22.46	1.00	30.00	PASS
		8	0		21.27	0.5	21.77	1.00	30.00	PASS
		8	4		21.18	0.5	21.68	1.00	30.00	PASS
		8	7		20.99	0.5	21.49	1.00	30.00	PASS
		15	0		21.26	0.5	21.76	1.00	30.00	PASS

Radiated Power (EIRP) for LTE Band 66 /5M										
BW (MHz)	UL Channel	RB Size	RB offset	Modulation	Conduction AVG Power(dBm)	Ant Gain（dBi）	EIRP (dBm)	EIRP Limit(W)	EIRP Limit(dBm)	Verdict
5	Lowest	1	0	QPSK	22.59	0.5	23.09	1.00	30.00	PASS
		1	12		22.53	0.5	23.03	1.00	30.00	PASS
		1	24		22.25	0.5	22.75	1.00	30.00	PASS
		12	0		21.77	0.5	22.27	1.00	30.00	PASS
		12	6		21.76	0.5	22.26	1.00	30.00	PASS
		12	11		21.54	0.5	22.04	1.00	30.00	PASS
		25	0		21.65	0.5	22.15	1.00	30.00	PASS
		1	0	16QAM	22.08	0.5	22.58	1.00	30.00	PASS
		1	12		22.07	0.5	22.57	1.00	30.00	PASS
		1	24		21.68	0.5	22.18	1.00	30.00	PASS
		12	0		20.90	0.5	21.40	1.00	30.00	PASS
		12	6		20.86	0.5	21.36	1.00	30.00	PASS
		12	11		20.65	0.5	21.15	1.00	30.00	PASS
		25	0		20.82	0.5	21.32	1.00	30.00	PASS
	Middle	1	0	QPSK	23.12	0.5	23.62	1.00	30.00	PASS
		1	12		23.11	0.5	23.61	1.00	30.00	PASS
		1	24		22.90	0.5	23.40	1.00	30.00	PASS
		12	0		22.35	0.5	22.85	1.00	30.00	PASS
		12	6		22.38	0.5	22.88	1.00	30.00	PASS
		12	11		22.27	0.5	22.77	1.00	30.00	PASS
		25	0		22.30	0.5	22.80	1.00	30.00	PASS
		1	0	16QAM	22.47	0.5	22.97	1.00	30.00	PASS
		1	12		22.46	0.5	22.96	1.00	30.00	PASS
		1	24		22.19	0.5	22.69	1.00	30.00	PASS
		12	0		21.56	0.5	22.06	1.00	30.00	PASS
		12	6		21.57	0.5	22.07	1.00	30.00	PASS
		12	11		21.46	0.5	21.96	1.00	30.00	PASS
		25	0		21.39	0.5	21.89	1.00	30.00	PASS
	Highest	1	0	QPSK	23.42	0.5	23.92	1.00	30.00	PASS
		1	12		23.10	0.5	23.60	1.00	30.00	PASS
		1	24		22.57	0.5	23.07	1.00	30.00	PASS
		12	0		22.38	0.5	22.88	1.00	30.00	PASS
		12	6		22.25	0.5	22.75	1.00	30.00	PASS
		12	11		21.89	0.5	22.39	1.00	30.00	PASS
		25	0		22.14	0.5	22.64	1.00	30.00	PASS
		1	0	16QAM	22.59	0.5	23.09	1.00	30.00	PASS
		1	12		22.33	0.5	22.83	1.00	30.00	PASS
		1	24		21.74	0.5	22.24	1.00	30.00	PASS
		12	0		21.66	0.5	22.16	1.00	30.00	PASS
		12	6		21.56	0.5	22.06	1.00	30.00	PASS
		12	11		21.20	0.5	21.70	1.00	30.00	PASS
		25	0		21.33	0.5	21.83	1.00	30.00	PASS

Radiated Power (EIRP) for LTE Band 66 /10M										
BW (MHz)	UL Channel	RB Size	RB offset	Modulation	Conduction AVG Power(dBm)	Ant Gain（dBi）	EIRP (dBm)	EIRP Limit(W)	EIRP Limit(dBm)	Verdict
10	Lowest	1	0	QPSK	22.32	0.5	22.82	1.00	30.00	PASS
		1	24		22.10	0.5	22.60	1.00	30.00	PASS
		1	49		21.18	0.5	21.68	1.00	30.00	PASS
		25	0		21.38	0.5	21.88	1.00	30.00	PASS
		25	12		21.20	0.5	21.70	1.00	30.00	PASS
		25	24		20.74	0.5	21.24	1.00	30.00	PASS
		50	0		21.06	0.5	21.56	1.00	30.00	PASS
		1	0	16QAM	21.62	0.5	22.12	1.00	30.00	PASS
		1	24		21.55	0.5	22.05	1.00	30.00	PASS
		1	49		20.66	0.5	21.16	1.00	30.00	PASS
		25	0		20.55	0.5	21.05	1.00	30.00	PASS
		25	12		20.44	0.5	20.94	1.00	30.00	PASS
		25	24		19.93	0.5	20.43	1.00	30.00	PASS
		50	0		20.22	0.5	20.72	1.00	30.00	PASS
	Middle	1	0	QPSK	22.95	0.5	23.45	1.00	30.00	PASS
		1	24		23.11	0.5	23.61	1.00	30.00	PASS
		1	49		22.21	0.5	22.71	1.00	30.00	PASS
		25	0		22.28	0.5	22.78	1.00	30.00	PASS
		25	12		22.28	0.5	22.78	1.00	30.00	PASS
		25	24		21.94	0.5	22.44	1.00	30.00	PASS
		50	0		22.06	0.5	22.56	1.00	30.00	PASS
		1	0	16QAM	22.25	0.5	22.75	1.00	30.00	PASS
		1	24		22.27	0.5	22.77	1.00	30.00	PASS
		1	49		21.54	0.5	22.04	1.00	30.00	PASS
		25	0		21.38	0.5	21.88	1.00	30.00	PASS
		25	12		21.38	0.5	21.88	1.00	30.00	PASS
		25	24		21.02	0.5	21.52	1.00	30.00	PASS
		50	0		21.17	0.5	21.67	1.00	30.00	PASS
	Highest	1	0	QPSK	22.78	0.5	23.28	1.00	30.00	PASS
		1	24		23.31	0.5	23.81	1.00	30.00	PASS
		1	49		22.35	0.5	22.85	1.00	30.00	PASS
		25	0		22.29	0.5	22.79	1.00	30.00	PASS
		25	12		22.47	0.5	22.97	1.00	30.00	PASS
		25	24		22.06	0.5	22.56	1.00	30.00	PASS
		50	0		22.19	0.5	22.69	1.00	30.00	PASS
		1	0	16QAM	22.23	0.5	22.73	1.00	30.00	PASS
		1	24		22.76	0.5	23.26	1.00	30.00	PASS
		1	49		21.79	0.5	22.29	1.00	30.00	PASS
		25	0		21.33	0.5	21.83	1.00	30.00	PASS
		25	12		21.52	0.5	22.02	1.00	30.00	PASS
		25	24		21.13	0.5	21.63	1.00	30.00	PASS
		50	0		21.27	0.5	21.77	1.00	30.00	PASS

Radiated Power (EIRP) for LTE Band 66 /15M										
BW (MHz)	UL Channel	RB Size	RB offset	Modulation	Conduction AVG Power(dBm)	Ant Gain（dBi）	EIRP (dBm)	EIRP Limit(W)	EIRP Limit(dBm)	Verdict
15	Lowest	1	0	QPSK	22.56	0.5	23.06	1.00	30.00	PASS
		1	37		21.89	0.5	22.39	1.00	30.00	PASS
		1	74		21.60	0.5	22.10	1.00	30.00	PASS
		36	0		21.40	0.5	21.90	1.00	30.00	PASS
		36	18		21.04	0.5	21.54	1.00	30.00	PASS
		36	39		20.57	0.5	21.07	1.00	30.00	PASS
		75	0		20.94	0.5	21.44	1.00	30.00	PASS
		1	0	16QAM	21.85	0.5	22.35	1.00	30.00	PASS
		1	37		21.22	0.5	21.72	1.00	30.00	PASS
		1	74		20.91	0.5	21.41	1.00	30.00	PASS
		36	0		20.50	0.5	21.00	1.00	30.00	PASS
		36	18		20.14	0.5	20.64	1.00	30.00	PASS
		36	39		19.72	0.5	20.22	1.00	30.00	PASS
		75	0		20.04	0.5	20.54	1.00	30.00	PASS
	Middle	1	0	QPSK	23.15	0.5	23.65	1.00	30.00	PASS
		1	37		23.14	0.5	23.64	1.00	30.00	PASS
		1	74		22.14	0.5	22.64	1.00	30.00	PASS
		36	0		22.46	0.5	22.96	1.00	30.00	PASS
		36	18		22.33	0.5	22.83	1.00	30.00	PASS
		36	39		21.85	0.5	22.35	1.00	30.00	PASS
		75	0		22.12	0.5	22.62	1.00	30.00	PASS
		1	0	16QAM	22.35	0.5	22.85	1.00	30.00	PASS
		1	37		22.39	0.5	22.89	1.00	30.00	PASS
		1	74		21.35	0.5	21.85	1.00	30.00	PASS
		36	0		21.60	0.5	22.10	1.00	30.00	PASS
		36	18		21.47	0.5	21.97	1.00	30.00	PASS
		36	39		21.04	0.5	21.54	1.00	30.00	PASS
		75	0		21.23	0.5	21.73	1.00	30.00	PASS
	Highest	1	0	QPSK	22.28	0.5	22.78	1.00	30.00	PASS
		1	37		23.46	0.5	23.96	1.00	30.00	PASS
		1	74		22.65	0.5	23.15	1.00	30.00	PASS
		36	0		21.94	0.5	22.44	1.00	30.00	PASS
		36	18		22.48	0.5	22.98	1.00	30.00	PASS
		36	39		22.37	0.5	22.87	1.00	30.00	PASS
		75	0		22.19	0.5	22.69	1.00	30.00	PASS
		1	0	16QAM	21.33	0.5	21.83	1.00	30.00	PASS
		1	37		22.58	0.5	23.08	1.00	30.00	PASS
		1	74		21.76	0.5	22.26	1.00	30.00	PASS
		36	0		20.99	0.5	21.49	1.00	30.00	PASS
		36	18		21.56	0.5	22.06	1.00	30.00	PASS
		36	39		21.48	0.5	21.98	1.00	30.00	PASS
		75	0		21.30	0.5	21.80	1.00	30.00	PASS

Radiated Power (EIRP) for LTE Band 66 /20M										
BW (MHz)	UL Channel	RB Size	RB offset	Modulation	Conduction AVG Power(dBm)	Ant Gain（dBi）	EIRP (dBm)	EIRP Limit(W)	EIRP Limit(dBm)	Verdict
20	Lowest	1	0	QPSK	22.38	0.5	22.88	1.00	30.00	PASS
		1	49		21.51	0.5	22.01	1.00	30.00	PASS
		1	99		22.07	0.5	22.57	1.00	30.00	PASS
		50	0		21.01	0.5	21.51	1.00	30.00	PASS
		50	24		20.62	0.5	21.12	1.00	30.00	PASS
		50	49		20.59	0.5	21.09	1.00	30.00	PASS
		100	0		20.63	0.5	21.13	1.00	30.00	PASS
		1	0	16QAM	21.62	0.5	22.12	1.00	30.00	PASS
		1	49		20.84	0.5	21.34	1.00	30.00	PASS
		1	99		21.30	0.5	21.80	1.00	30.00	PASS
		50	0		20.18	0.5	20.68	1.00	30.00	PASS
		50	24		19.80	0.5	20.30	1.00	30.00	PASS
		50	49		19.78	0.5	20.28	1.00	30.00	PASS
		100	0		19.80	0.5	20.30	1.00	30.00	PASS
	Middle	1	0	QPSK	22.81	0.5	23.31	1.00	30.00	PASS
		1	49		23.10	0.5	23.60	1.00	30.00	PASS
		1	99		21.66	0.5	22.16	1.00	30.00	PASS
		50	0		23.47	0.5	23.97	1.00	30.00	PASS
		50	24		22.21	0.5	22.71	1.00	30.00	PASS
		50	49		21.50	0.5	22.00	1.00	30.00	PASS
		100	0		21.88	0.5	22.38	1.00	30.00	PASS
		1	0	16QAM	21.99	0.5	22.49	1.00	30.00	PASS
		1	49		22.25	0.5	22.75	1.00	30.00	PASS
		1	99		20.94	0.5	21.44	1.00	30.00	PASS
		50	0		21.46	0.5	21.96	1.00	30.00	PASS
		50	24		21.34	0.5	21.84	1.00	30.00	PASS
		50	49		20.63	0.5	21.13	1.00	30.00	PASS
		100	0		21.01	0.5	21.51	1.00	30.00	PASS
	Highest	1	0	QPSK	21.46	0.5	21.96	1.00	30.00	PASS
		1	49		22.97	0.5	23.47	1.00	30.00	PASS
		1	99		22.50	0.5	23.00	1.00	30.00	PASS
		50	0		21.17	0.5	21.67	1.00	30.00	PASS
		50	24		22.04	0.5	22.54	1.00	30.00	PASS
		50	49		22.21	0.5	22.71	1.00	30.00	PASS
		100	0		21.74	0.5	22.24	1.00	30.00	PASS
		1	0	16QAM	20.67	0.5	21.17	1.00	30.00	PASS
		1	49		22.18	0.5	22.68	1.00	30.00	PASS
		1	99		21.74	0.5	22.24	1.00	30.00	PASS
		50	0		20.32	0.5	20.82	1.00	30.00	PASS
		50	24		21.18	0.5	21.68	1.00	30.00	PASS
		50	49		21.37	0.5	21.87	1.00	30.00	PASS
		100	0		20.87	0.5	21.37	1.00	30.00	PASS

Radiated Power (ERP) for LTE Band 71 /5M										
BW (MHz)	UL Channel	RB Size	RB offset	Modulation	Conduction AVG Power(dBm)	Ant Gain（dBi）	ERP (dBm)	ERP Limit(W)	ERP Limit(dBm)	Verdict
5	Lowest	1	0	QPSK	23.83	1.4	23.08	3.00	34.77	PASS
		1	12		23.23	1.4	22.48	3.00	34.77	PASS
		1	24		22.29	1.4	21.54	3.00	34.77	PASS
		12	0		22.41	1.4	21.66	3.00	34.77	PASS
		12	6		22.20	1.4	21.45	3.00	34.77	PASS
		12	11		21.16	1.4	20.41	3.00	34.77	PASS
		25	0		21.97	1.4	21.22	3.00	34.77	PASS
		1	0	16QAM	22.65	1.4	21.90	3.00	34.77	PASS
		1	12		22.39	1.4	21.64	3.00	34.77	PASS
		1	24		21.61	1.4	20.86	3.00	34.77	PASS
		12	0		21.13	1.4	20.38	3.00	34.77	PASS
		12	6		21.09	1.4	20.34	3.00	34.77	PASS
		12	11		20.10	1.4	19.35	3.00	34.77	PASS
		25	0		20.92	1.4	20.17	3.00	34.77	PASS
	Middle	1	0	QPSK	21.84	1.4	21.09	3.00	34.77	PASS
		1	12		21.77	1.4	21.02	3.00	34.77	PASS
		1	24		21.74	1.4	20.99	3.00	34.77	PASS
		12	0		20.80	1.4	20.05	3.00	34.77	PASS
		12	6		20.79	1.4	20.04	3.00	34.77	PASS
		12	11		20.69	1.4	19.94	3.00	34.77	PASS
		25	0		20.74	1.4	19.99	3.00	34.77	PASS
		1	0	16QAM	21.00	1.4	20.25	3.00	34.77	PASS
		1	12		20.91	1.4	20.16	3.00	34.77	PASS
		1	24		20.87	1.4	20.12	3.00	34.77	PASS
		12	0		19.84	1.4	19.09	3.00	34.77	PASS
		12	6		19.85	1.4	19.10	3.00	34.77	PASS
		12	11		19.76	1.4	19.01	3.00	34.77	PASS
		25	0		19.67	1.4	18.92	3.00	34.77	PASS
	Highest	1	0	QPSK	20.53	1.4	19.78	3.00	34.77	PASS
		1	12		20.33	1.4	19.58	3.00	34.77	PASS
		1	24		20.60	1.4	19.85	3.00	34.77	PASS
		12	0		19.22	1.4	18.47	3.00	34.77	PASS
		12	6		19.18	1.4	18.43	3.00	34.77	PASS
		12	11		19.36	1.4	18.61	3.00	34.77	PASS
		25	0		19.28	1.4	18.53	3.00	34.77	PASS
		1	0	16QAM	19.70	1.4	18.95	3.00	34.77	PASS
		1	12		19.35	1.4	18.60	3.00	34.77	PASS
		1	24		19.72	1.4	18.97	3.00	34.77	PASS
		12	0		18.36	1.4	17.61	3.00	34.77	PASS
		12	6		18.29	1.4	17.54	3.00	34.77	PASS
		12	11		18.39	1.4	17.64	3.00	34.77	PASS
		25	0		18.24	1.4	17.49	3.00	34.77	PASS

Radiated Power (ERP) for LTE Band 71 /10M										
BW (MHz)	UL Channel	RB Size	RB offset	Modulation	Conduction AVG Power(dBm)	Ant Gain（dBi）	ERP (dBm)	ERP Limit(W)	ERP Limit(dBm)	Verdict
10	Lowest	1	0	QPSK	23.85	1.4	23.10	3.00	34.77	PASS
		1	24		22.10	1.4	21.35	3.00	34.77	PASS
		1	49		21.50	1.4	20.75	3.00	34.77	PASS
		25	0		21.44	1.4	20.69	3.00	34.77	PASS
		25	12		21.04	1.4	20.29	3.00	34.77	PASS
		25	24		20.90	1.4	20.15	3.00	34.77	PASS
		50	0		20.63	1.4	19.88	3.00	34.77	PASS
		1	0	16QAM	22.39	1.4	21.64	3.00	34.77	PASS
		1	24		21.26	1.4	20.51	3.00	34.77	PASS
		1	49		20.82	1.4	20.07	3.00	34.77	PASS
		25	0		20.40	1.4	19.65	3.00	34.77	PASS
		25	12		19.99	1.4	19.24	3.00	34.77	PASS
		25	24		19.91	1.4	19.16	3.00	34.77	PASS
		50	0		19.54	1.4	18.79	3.00	34.77	PASS
	Middle	1	0	QPSK	21.37	1.4	20.62	3.00	34.77	PASS
		1	24		21.55	1.4	20.80	3.00	34.77	PASS
		1	49		20.88	1.4	20.13	3.00	34.77	PASS
		25	0		20.53	1.4	19.78	3.00	34.77	PASS
		25	12		20.56	1.4	19.81	3.00	34.77	PASS
		25	24		20.31	1.4	19.56	3.00	34.77	PASS
		50	0		20.41	1.4	19.66	3.00	34.77	PASS
		1	0	16QAM	20.46	1.4	19.71	3.00	34.77	PASS
		1	24		20.58	1.4	19.83	3.00	34.77	PASS
		1	49		20.02	1.4	19.27	3.00	34.77	PASS
		25	0		19.50	1.4	18.75	3.00	34.77	PASS
		25	12		19.50	1.4	18.75	3.00	34.77	PASS
		25	24		19.27	1.4	18.52	3.00	34.77	PASS
		50	0		19.39	1.4	18.64	3.00	34.77	PASS
	Highest	1	0	QPSK	20.67	1.4	19.92	3.00	34.77	PASS
		1	24		20.54	1.4	19.79	3.00	34.77	PASS
		1	49		20.06	1.4	19.31	3.00	34.77	PASS
		25	0		19.50	1.4	18.75	3.00	34.77	PASS
		25	12		19.35	1.4	18.60	3.00	34.77	PASS
		25	24		18.94	1.4	18.19	3.00	34.77	PASS
		50	0		19.24	1.4	18.49	3.00	34.77	PASS
		1	0	16QAM	20.04	1.4	19.29	3.00	34.77	PASS
		1	24		19.86	1.4	19.11	3.00	34.77	PASS
		1	49		19.30	1.4	18.55	3.00	34.77	PASS
		25	0		18.48	1.4	17.73	3.00	34.77	PASS
		25	12		18.32	1.4	17.57	3.00	34.77	PASS
		25	24		17.88	1.4	17.13	3.00	34.77	PASS
		50	0		18.21	1.4	17.46	3.00	34.77	PASS

Radiated Power (ERP) for LTE Band 71 /15M										
BW (MHz)	UL Channel	RB Size	RB offset	Modulation	Conduction AVG Power(dBm)	Ant Gain（dBi）	ERP (dBm)	ERP Limit(W)	ERP Limit(dBm)	Verdict
15	Lowest	1	0	QPSK	23.82	1.4	23.07	3.00	34.77	PASS
		1	37		22.33	1.4	21.58	3.00	34.77	PASS
		1	74		22.03	1.4	21.28	3.00	34.77	PASS
		36	0		20.97	1.4	20.22	3.00	34.77	PASS
		36	18		21.32	1.4	20.57	3.00	34.77	PASS
		36	39		21.10	1.4	20.35	3.00	34.77	PASS
		75	0		21.02	1.4	20.27	3.00	34.77	PASS
		1	0	16QAM	22.51	1.4	21.76	3.00	34.77	PASS
		1	37		21.57	1.4	20.82	3.00	34.77	PASS
		1	74		21.24	1.4	20.49	3.00	34.77	PASS
		36	0		19.88	1.4	19.13	3.00	34.77	PASS
		36	18		20.26	1.4	19.51	3.00	34.77	PASS
		36	39		20.03	1.4	19.28	3.00	34.77	PASS
		75	0		19.94	1.4	19.19	3.00	34.77	PASS
	Middle	1	0	QPSK	21.90	1.4	21.15	3.00	34.77	PASS
		1	37		21.77	1.4	21.02	3.00	34.77	PASS
		1	74		21.33	1.4	20.58	3.00	34.77	PASS
		36	0		20.93	1.4	20.18	3.00	34.77	PASS
		36	18		20.86	1.4	20.11	3.00	34.77	PASS
		36	39		20.60	1.4	19.85	3.00	34.77	PASS
		75	0		20.73	1.4	19.98	3.00	34.77	PASS
		1	0	16QAM	20.90	1.4	20.15	3.00	34.77	PASS
		1	37		20.87	1.4	20.12	3.00	34.77	PASS
		1	74		20.42	1.4	19.67	3.00	34.77	PASS
		36	0		19.90	1.4	19.15	3.00	34.77	PASS
		36	18		19.85	1.4	19.10	3.00	34.77	PASS
		36	39		19.58	1.4	18.83	3.00	34.77	PASS
		75	0		19.67	1.4	18.92	3.00	34.77	PASS
	Highest	1	0	QPSK	21.73	1.4	20.98	3.00	34.77	PASS
		1	37		21.06	1.4	20.31	3.00	34.77	PASS
		1	74		20.77	1.4	20.02	3.00	34.77	PASS
		36	0		20.39	1.4	19.64	3.00	34.77	PASS
		36	18		20.05	1.4	19.30	3.00	34.77	PASS
		36	39		19.46	1.4	18.71	3.00	34.77	PASS
		75	0		19.91	1.4	19.16	3.00	34.77	PASS
		1	0	16QAM	20.64	1.4	19.89	3.00	34.77	PASS
		1	37		20.06	1.4	19.31	3.00	34.77	PASS
		1	74		19.73	1.4	18.98	3.00	34.77	PASS
		36	0		19.31	1.4	18.56	3.00	34.77	PASS
		36	18		19.00	1.4	18.25	3.00	34.77	PASS
		36	39		18.41	1.4	17.66	3.00	34.77	PASS
		75	0		18.86	1.4	18.11	3.00	34.77	PASS

Radiated Power (ERP) for LTE Band 71 /20M										
BW (MHz)	UL Channel	RB Size	RB offset	Modulation	Conduction AVG Power(dBm)	Ant Gain（dBi）	ERP (dBm)	ERP Limit(W)	ERP Limit(dBm)	Verdict
20	Lowest	1	0	QPSK	24.01	1.4	23.26	3.00	34.77	PASS
		1	49		22.21	1.4	21.46	3.00	34.77	PASS
		1	99		21.41	1.4	20.66	3.00	34.77	PASS
		50	0		20.99	1.4	20.24	3.00	34.77	PASS
		50	24		21.19	1.4	20.44	3.00	34.77	PASS
		50	49		20.87	1.4	20.12	3.00	34.77	PASS
		100	0		20.94	1.4	20.19	3.00	34.77	PASS
		1	0	16QAM	22.60	1.4	21.85	3.00	34.77	PASS
		1	49		21.33	1.4	20.58	3.00	34.77	PASS
		1	99		20.63	1.4	19.88	3.00	34.77	PASS
		50	0		19.94	1.4	19.19	3.00	34.77	PASS
		50	24		20.16	1.4	19.41	3.00	34.77	PASS
		50	49		19.82	1.4	19.07	3.00	34.77	PASS
		100	0		19.87	1.4	19.12	3.00	34.77	PASS
	Middle	1	0	QPSK	21.88	1.4	21.13	3.00	34.77	PASS
		1	49		21.78	1.4	21.03	3.00	34.77	PASS
		1	99		20.66	1.4	19.91	3.00	34.77	PASS
		50	0		20.89	1.4	20.14	3.00	34.77	PASS
		50	24		20.86	1.4	20.11	3.00	34.77	PASS
		50	49		20.48	1.4	19.73	3.00	34.77	PASS
		100	0		20.68	1.4	19.93	3.00	34.77	PASS
		1	0	16QAM	20.97	1.4	20.22	3.00	34.77	PASS
		1	49		20.80	1.4	20.05	3.00	34.77	PASS
		1	99		19.77	1.4	19.02	3.00	34.77	PASS
		50	0		19.86	1.4	19.11	3.00	34.77	PASS
		50	24		19.82	1.4	19.07	3.00	34.77	PASS
		50	49		19.43	1.4	18.68	3.00	34.77	PASS
		100	0		19.64	1.4	18.89	3.00	34.77	PASS
	Highest	1	0	QPSK	21.54	1.4	20.79	3.00	34.77	PASS
		1	49		21.46	1.4	20.71	3.00	34.77	PASS
		1	99		20.43	1.4	19.68	3.00	34.77	PASS
		50	0		20.51	1.4	19.76	3.00	34.77	PASS
		50	24		20.30	1.4	19.55	3.00	34.77	PASS
		50	49		19.60	1.4	18.85	3.00	34.77	PASS
		100	0		20.10	1.4	19.35	3.00	34.77	PASS
		1	0	16QAM	20.61	1.4	19.86	3.00	34.77	PASS
		1	49		20.54	1.4	19.79	3.00	34.77	PASS
		1	99		19.42	1.4	18.67	3.00	34.77	PASS
		50	0		19.50	1.4	18.75	3.00	34.77	PASS
		50	24		19.29	1.4	18.54	3.00	34.77	PASS
		50	49		18.61	1.4	17.86	3.00	34.77	PASS
		100	0		19.08	1.4	18.33	3.00	34.77	PASS

5.2 PEAK TO AVERAGE RATIO

TEST OVERVIEW

According to §24.232(d), power measurements for transmissions by stations authorized under this section may be made either in accordance with a commission-approved average power technique or in compliance with paragraph (e) of this section. In both instances, equipment employed must be authorized in accordance with the provisions of §24.51. In measuring transmissions in this band using an average power technique, the peak-to-average ratio (PAR) of the transmission may not exceed 13 db.

TEST PROCEDURES

1. The testing follows FCC KDB 971168 v03r01 section.

2. The eut was connected to the peak and av system simulator& spectrum analyzer.

3. Select lowest, middle, and highest channels for each band and different modulation.

4. Set the test probe and measure average power of the spectrum analysis,

TEST SETUP

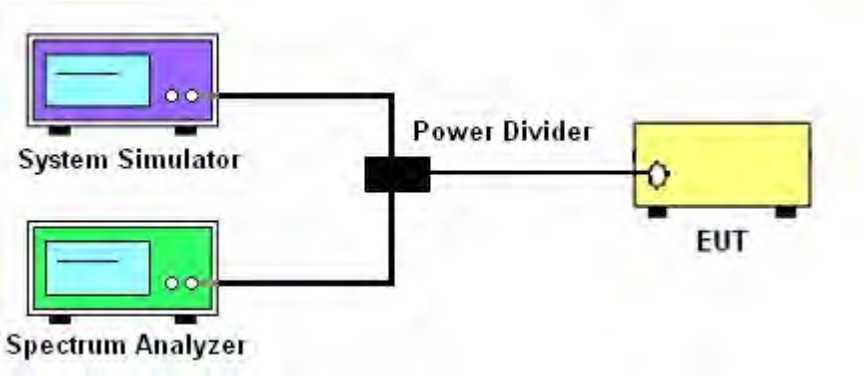

TEST RESULT

Note: The test data please reference to attachment “STS2505051W01_Appendix WCDMA” and “STS2505051W01_Appendix LTE”.

5.3 OCCUPIED BANDWIDTH

TEST OVERVIEW

The occupied bandwidth, that is the frequency bandwidth such that, below its lower and above its upper frequency limits, the mean powers radiated are each equal to 0.5 percent of the total mean power radiated by a given emission shall be measured.

The 26 dB emission bandwidth is defined as the frequency range between two points, one above and one below the carrier frequency, at which the spectral density of the emission is attenuated 26 dB below the maximum in-band spectral density of the modulated signal. Spectral density (power per unit bandwidth) is to be measured with a detector of resolution bandwidth equal to approximately 1.0% of the emission bandwidth.

All modes of operation were investigated and the worst case configuration results are reported in this section.

TEST PROCEDURE

1. The signal analyzer's automatic bandwidth measurement capability was used to perform the 99% occupied bandwidth and the 26dB bandwidth. The bandwidth measurement was not influenced by any intermediate power nulls in the fundamental emission.
2. RBW = 1 – 5% of the expected OBW
3. VBW ≥ 3 x RBW
4. Detector = Peak
5. Trace mode = max hold
6. Sweep = auto couple
7.The trace was allowed to stabilize
8. If necessary, steps 2 – 7 were repeated after changing the RBW such that it would be within 1 – 5% of the 99% occupied bandwidth observed in Step 7

TEST SETUP

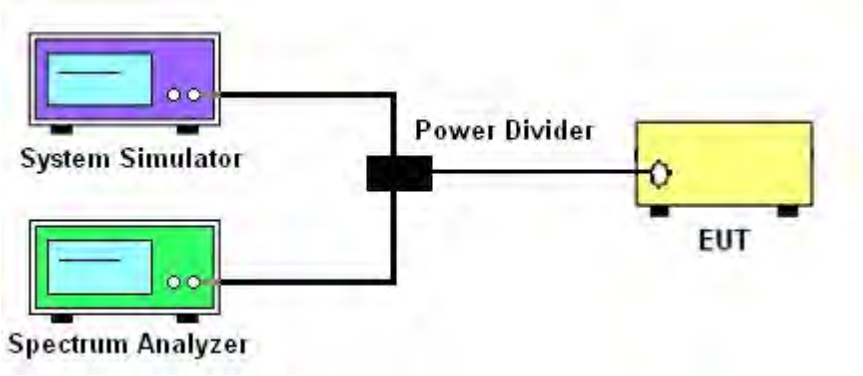

TEST RESULT

Note: The test data please reference to attachment "STS2505051W01_Appendix WCDMA" and "STS2505051W01_Appendix LTE".

5.4 FREQUENCY STABILITY

TEST OVERVIEW

Frequency stability testing is performed in accordance with the guidelines of ANSI C63.26 2015. The frequency stability of the transmitter is measured by:

a.) Temperature: The temperature is varied from -30°C to +50°C in 10°C increments using an environmental chamber.

b.) Primary Supply Voltage: The primary supply voltage is varied from 85% to 115% of the nominal value for non hand-carried battery and AC powered equipment. For hand-carried, battery-powered equipment, primary supply voltage is reduced to the battery operating end point which shall be specified by the manufacturer.

For Part 22, the frequency stability of the transmitter shall be maintained within ±0.00025% (±2.5 ppm) of the center frequency. For Part 24 the frequency stability shall be sufficient to ensure that the fundamental emission stays within the authorized frequency block.

TEST PROCEDURE

Temperature Variation

1. The testing follows FCC KDB 971168 D01 section 9.0
2. The EUT was set up in the thermal chamber and connected with the system simulator.
3. With power OFF, the temperature was decreased to -30°C and the EUT was stabilized before testing. Power was applied and the maximum change in frequency was recorded within one minute.
4. With power OFF, the temperature was raised in 10°C steps up to 50°C. The EUT was stabilized at each step for at least half an hour. Power was applied and the maximum frequency change was recorded within one minute.

Voltage Variation

1. The testing follows FCC KDB 971168 D01 Section 9.0.
2. The EUT was placed in a temperature chamber at 25±5° C and connected with the system simulator.
3. The power supply voltage to the EUT was varied from 85% to 115% of the nominal value measured at the input to the EUT.
4. The variation in frequency was measured for the worst case.

TEST SETUP

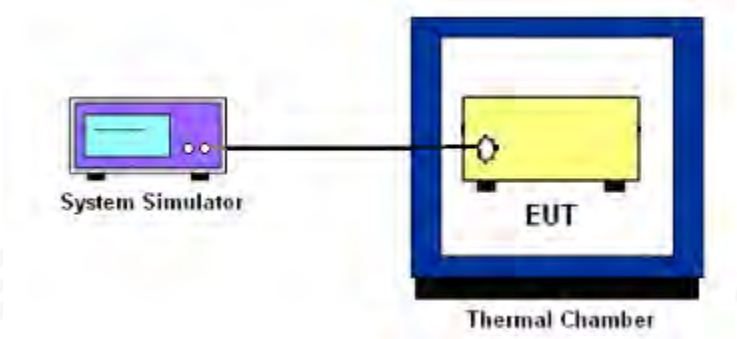

TEST RESULT

UMTS Band 2 /1880MHz					
Temperature (°C)	Voltage (Volt)	Freq. Dev. (Hz)	Freq. Dev. (ppm)	Limit	Result
50	Normal Voltage	30.87	0.016	Within Authorized Band	PASS
40		32.66	0.017		
30		34.38	0.018		
20		33.56	0.018		
10		21.15	0.011		
0		22.15	0.012		
-10		34.65	0.018		
-20		35.38	0.019		
-30		16.68	0.009		
20	Maximum Voltage	35.22	0.019		
20	BEP	31.69	0.017		

HSDPA Band 2 /1880MHz					
Temperature (°C)	Voltage (Volt)	Freq. Dev. (Hz)	Freq. Dev. (ppm)	Limit	Result
50	Normal Voltage	15.56	0.008	Within Authorized Band	PASS
40		19.14	0.010		
30		18.22	0.010		
20		33.66	0.018		
10		27.42	0.015		
0		14.42	0.008		
-10		25.27	0.013		
-20		12.77	0.007		
-30		30.45	0.016		
20	Maximum Voltage	15.73	0.008		
20	BEP	31.12	0.017		

HSUPA Band 2 /1880MHz					
Temperature (°C)	Voltage (Volt)	Freq. Dev. (Hz)	Freq. Dev. (ppm)	Limit	Result
50	Normal Voltage	32.37	0.017	Within Authorized Band	PASS
40		15.22	0.008		
30		13.65	0.007		
20		13.84	0.007		
10		26.87	0.014		
0		26.32	0.014		
-10		27.81	0.015		
-20		18.04	0.010		
-30		22.54	0.012		
20	Maximum Voltage	17.12	0.009		
20	BEP	25.09	0.013		

UMTS Band 5 / 836.4MHz					
Temperature (°C)	Voltage (Volt)	Freq. Dev. (Hz)	Freq. Dev. (ppm)	Limit	Result
50	Normal Voltage	29.96	0.036	2.5ppm	PASS
40		33.82	0.040		
30		13.18	0.016		
20		19.13	0.023		
10		22.96	0.027		
0		27.96	0.033		
-10		28.92	0.035		
-20		32.24	0.039		
-30		32.53	0.039		
20	Maximum Voltage	18.76	0.022		
20	BEP	30.33	0.036		

HSDPA Band 5 / 836.4MHz					
Temperature (°C)	Voltage (Volt)	Freq. Dev. (Hz)	Freq. Dev. (ppm)	Limit	Result
50	Normal Voltage	13.21	0.016	2.5ppm	PASS
40		32.20	0.038		
30		32.54	0.039		
20		15.72	0.019		
10		14.77	0.018		
0		35.41	0.042		
-10		22.64	0.027		
-20		19.19	0.023		
-30		28.68	0.034		
20	Maximum Voltage	32.15	0.038		
20	BEP	19.09	0.023		

HSUPA Band 5 / 836.4MHz					
Temperature (°C)	Voltage (Volt)	Freq. Dev. (Hz)	Freq. Dev. (ppm)	Limit	Result
50	Normal Voltage	23.25	0.028	2.5ppm	PASS
40		32.93	0.039		
30		22.37	0.027		
20		36.39	0.043		
10		12.22	0.015		
0		20.94	0.025		
-10		32.01	0.038		
-20		28.36	0.034		
-30		27.29	0.033		
20	Maximum Voltage	28.37	0.034		
20	BEP	12.01	0.014		

UMTS Band 4 /1740MHz					
Temperature (°C)	Voltage (Volt)	Freq. Dev. (Hz)	Freq. Dev. (ppm)	Limit	Result
50	Normal Voltage	32.73	0.017	Within Authorized Band	PASS
40		24.15	0.013		
30		29.57	0.016		
20		16.76	0.009		
10		13.05	0.007		
0		24.55	0.013		
-10		35.69	0.019		
-20		23.42	0.012		
-30		28.15	0.015		
20	Maximum Voltage	21.58	0.011		
20	BEP	32.35	0.017		

HSDPA Band 4 /1740MHz					
Temperature (°C)	Voltage (Volt)	Freq. Dev. (Hz)	Freq. Dev. (ppm)	Limit	Result
50	Normal Voltage	27.20	0.014	Within Authorized Band	PASS
40		26.57	0.014		
30		36.43	0.019		
20		27.19	0.014		
10		20.25	0.011		
0		14.01	0.007		
-10		31.61	0.017		
-20		15.58	0.008		
-30		20.51	0.011		
20	Maximum Voltage	14.52	0.008		
20	BEP	20.65	0.011		

HSUPA Band 4 /1740MHz					
Temperature (°C)	Voltage (Volt)	Freq. Dev. (Hz)	Freq. Dev. (ppm)	Limit	Result
50	Normal Voltage	14.92	0.008	Within Authorized Band	PASS
40		27.84	0.015		
30		20.50	0.011		
20		15.08	0.008		
10		17.06	0.009		
0		18.55	0.010		
-10		25.24	0.013		
-20		20.89	0.011		
-30		16.80	0.009		
20	Maximum Voltage	35.64	0.019		
20	BEP	27.75	0.015		

LTE Band 2 (QPSK) / 1880MHz / BW10M					
Temperature (°C)	Voltage (Volt)	Freq. Dev. (Hz)	Freq. Dev. (ppm)	Limit	Result
50	Normal Voltage	13.54	0.007	2.5ppm	PASS
40		18.50	0.010		
30		28.34	0.015		
20		27.41	0.015		
10		34.74	0.018		
0		28.43	0.015		
-10		33.85	0.018		
-20		29.74	0.016		
-30		19.79	0.011		
20	Maximum Voltage	13.54	0.007		
20	BEP	27.66	0.015		

LTE Band 2 (QPSK) / 1880MHz / BW20M					
Temperature (°C)	Voltage (Volt)	Freq. Dev. (Hz)	Freq. Dev. (ppm)	Limit	Result
50	Normal Voltage	18.61	0.010	2.5ppm	PASS
40		35.64	0.019		
30		12.90	0.007		
20		28.02	0.015		
10		17.41	0.009		
0		25.48	0.014		
-10		35.48	0.019		
-20		21.99	0.012		
-30		23.22	0.012		
20	Maximum Voltage	20.60	0.011		
20	BEP	27.42	0.015		

LTE Band 4 (QPSK) / 1733MHz / BW10M					
Temperature (°C)	Voltage (Volt)	Freq. Dev. (Hz)	Freq. Dev. (ppm)	Limit	Result
50	Normal Voltage	26.53	0.015	2.5ppm	PASS
40		15.50	0.009		
30		24.65	0.014		
20		32.82	0.019		
10		22.80	0.013		
0		24.59	0.014		
-10		22.39	0.013		
-20		34.63	0.020		
-30		12.19	0.007		
20	Maximum Voltage	11.70	0.007		
20	BEP	29.41	0.017		

LTE Band 4 (QPSK) / 1733MHz / BW20M					
Temperature (°C)	Voltage	Freq. Dev.	Freq. Dev.	Limit	Result
	(Volt)	(Hz)	(ppm)		
50	Normal Voltage	34.64	0.020	2.5ppm	PASS
40		23.90	0.014		
30		15.67	0.009		
20		34.14	0.020		
10		15.82	0.009		
0		34.21	0.020		
-10		34.51	0.020		
-20		21.59	0.012		
-30		22.18	0.013		
20	Maximum Voltage	26.29	0.015		
20	BEP	23.87	0.014		

LTE Band 5 (QPSK) / 836.5MHz / BW5M					
Temperature (°C)	Voltage	Freq. Dev.	Freq. Dev.	Limit	Result
	(Volt)	(Hz)	(ppm)		
50	Normal Voltage	28.10	0.034	2.5ppm	PASS
40		27.44	0.033		
30		23.29	0.028		
20		24.29	0.029		
10		14.91	0.018		
0		19.63	0.023		
-10		34.98	0.042		
-20		16.51	0.020		
-30		18.28	0.022		
20	Maximum Voltage	33.56	0.040		
20	BEP	16.84	0.020		

LTE Band 5 (QPSK) / 836.5MHz / BW10M					
Temperature (°C)	Voltage	Freq. Dev.	Freq. Dev.	Limit	Result
	(Volt)	(Hz)	(ppm)		
50	Normal Voltage	31.33	0.037	2.5ppm	PASS
40		20.71	0.025		
30		18.85	0.023		
20		34.01	0.041		
10		35.44	0.042		
0		35.16	0.042		
-10		30.45	0.036		
-20		16.30	0.019		
-30		29.51	0.035		
20	Maximum Voltage	16.58	0.020		
20	BEP	31.85	0.038		

LTE Band 7 (QPSK) / 2535MHz / BW10M					
Temperature (°C)	Voltage (Volt)	Freq. Dev. (Hz)	Freq. Dev. (ppm)	Limit	Result
50	Normal Voltage	32.10	0.013	2.5ppm	PASS
40		20.68	0.008		
30		13.93	0.005		
20		13.13	0.005		
10		28.49	0.011		
0		20.26	0.008		
-10		21.31	0.008		
-20		29.81	0.012		
-30		22.20	0.009		
20	Maximum Voltage	12.28	0.005		
20	BEP	34.57	0.014		

LTE Band 7 (QPSK) / 2535MHz / BW20M					
Temperature (°C)	Voltage (Volt)	Freq. Dev. (Hz)	Freq. Dev. (ppm)	Limit	Result
50	Normal Voltage	29.66	0.012	2.5ppm	PASS
40		34.55	0.014		
30		17.44	0.007		
20		35.75	0.014		
10		30.71	0.012		
0		14.00	0.006		
-10		21.56	0.009		
-20		24.74	0.010		
-30		23.52	0.009		
20	Maximum Voltage	31.43	0.012		
20	BEP	33.33	0.013		

LTE Band 12 (QPSK) / 707.5MHz / BW5M					
Temperature (°C)	Voltage (Volt)	Freq. Dev. (Hz)	Freq. Dev. (ppm)	Limit	Result
50	Normal Voltage	28.01	0.040	2.5ppm	PASS
40		28.62	0.040		
30		29.32	0.041		
20		29.74	0.042		
10		31.06	0.044		
0		18.56	0.026		
-10		22.70	0.032		
-20		34.66	0.049		
-30		16.52	0.023		
20	Maximum Voltage	12.20	0.017		
20	BEP	12.91	0.018		

LTE Band 12 (QPSK) / 707.5MHz / BW10M					
Temperature (°C)	Voltage (Volt)	Freq. Dev. (Hz)	Freq. Dev. (ppm)	Limit	Result
50	Normal Voltage	17.81	0.025	2.5ppm	PASS
40		28.95	0.041		
30		34.64	0.049		
20		30.41	0.043		
10		15.92	0.023		
0		21.71	0.031		
-10		18.22	0.026		
-20		13.46	0.019		
-30		21.92	0.031		
20	Maximum Voltage	21.02	0.030		
20	BEP	23.24	0.033		

LTE Band 13 (QPSK) / 782MHz / BW5M					
Temperature (°C)	Voltage (Volt)	Freq. Dev. (Hz)	Freq. Dev. (ppm)	Limit	Result
50	Normal Voltage	19.06	0.024	2.5ppm	PASS
40		18.97	0.024		
30		17.33	0.022		
20		24.53	0.031		
10		19.73	0.025		
0		34.29	0.044		
-10		18.17	0.023		
-20		29.11	0.037		
-30		35.54	0.045		
20	Maximum Voltage	33.74	0.043		
20	BEP	19.45	0.025		

LTE Band 13 (QPSK) / 782MHz / BW10M					
Temperature (°C)	Voltage (Volt)	Freq. Dev. (Hz)	Freq. Dev. (ppm)	Limit	Result
50	Normal Voltage	25.79	0.033	2.5ppm	PASS
40		16.74	0.021		
30		33.65	0.043		
20		36.15	0.046		
10		19.74	0.025		
0		29.14	0.037		
-10		17.92	0.023		
-20		19.23	0.025		
-30		11.56	0.015		
20	Maximum Voltage	18.10	0.023		
20	BEP	17.57	0.022		

LTE Band 17 (QPSK) / 710MHz / BW5M					
Temperature (°C)	Voltage (Volt)	Freq. Dev. (Hz)	Freq. Dev. (ppm)	Limit	Result
50	Normal Voltage	31.44	0.044	2.5ppm	PASS
40		20.18	0.028		
30		19.27	0.027		
20		19.22	0.027		
10		30.52	0.043		
0		35.16	0.050		
-10		28.33	0.040		
-20		33.42	0.047		
-30		15.46	0.022		
20	Maximum Voltage	23.22	0.033		
20	BEP	33.26	0.047		

LTE Band 17 (QPSK) / 710MHz / BW10M					
Temperature (°C)	Voltage (Volt)	Freq. Dev. (Hz)	Freq. Dev. (ppm)	Limit	Result
50	Normal Voltage	36.23	0.051	2.5ppm	PASS
40		20.55	0.029		
30		21.07	0.030		
20		18.39	0.026		
10		34.69	0.049		
0		28.30	0.040		
-10		36.39	0.051		
-20		20.09	0.028		
-30		24.96	0.035		
20	Maximum Voltage	30.85	0.043		
20	BEP	33.87	0.048		

LTE Band 25 (QPSK) / 1882.5MHz / BW10M					
Temperature (°C)	Voltage (Volt)	Freq. Dev. (Hz)	Freq. Dev. (ppm)	Limit	Result
50	Normal Voltage	14.94	0.008	2.5ppm	PASS
40		36.35	0.019		
30		30.29	0.016		
20		25.02	0.013		
10		14.90	0.008		
0		19.10	0.010		
-10		14.10	0.007		
-20		24.91	0.013		
-30		15.15	0.008		
20	Maximum Voltage	19.10	0.010		
20	BEP	22.05	0.012		

LTE Band 25 (QPSK) / 1882.5MHz / BW20M					
Temperature (°C)	Voltage (Volt)	Freq. Dev. (Hz)	Freq. Dev. (ppm)	Limit	Result
50	Normal Voltage	12.08	0.006	2.5ppm	PASS
40		19.47	0.010		
30		16.26	0.009		
20		14.15	0.008		
10		18.88	0.010		
0		22.83	0.012		
-10		30.84	0.016		
-20		28.13	0.015		
-30		28.99	0.015		
20	Maximum Voltage	17.97	0.010		
20	BEP	17.36	0.009		

LTE Band 26-Part 22 (QPSK) / 836.5MHz / BW 10M					
Temperature (°C)	Voltage (Volt)	Freq. Dev. (Hz)	Freq. Dev. (ppm)	Limit	Result
50	Normal Voltage	25.51	0.030	2.5ppm	PASS
40		15.51	0.019		
30		34.70	0.041		
20		21.28	0.025		
10		34.84	0.042		
0		30.88	0.037		
-10		34.01	0.041		
-20		24.54	0.029		
-30		23.27	0.028		
20	Maximum Voltage	15.42	0.018		
20	BEP	14.38	0.017		

LTE Band 26-Part 22 (QPSK) / 836.5MHz / BW 15M					
Temperature (°C)	Voltage (Volt)	Freq. Dev. (Hz)	Freq. Dev. (ppm)	Limit	Result
50	Normal Voltage	16.14	0.019	2.5ppm	PASS
40		35.82	0.043		
30		17.67	0.021		
20		33.67	0.040		
10		20.81	0.025		
0		28.89	0.035		
-10		20.27	0.024		
-20		22.67	0.027		
-30		22.23	0.027		
20	Maximum Voltage	13.04	0.016		
20	BEP	22.19	0.027		

LTE Band 26-Part 90 (QPSK) / 819MHz / BW5M					
Temperature (°C)	Voltage (Volt)	Freq. Dev. (Hz)	Freq. Dev. (ppm)	Limit	Result
50	Normal Voltage	32.22	0.039	2.5ppm	PASS
40		15.49	0.019		
30		17.90	0.022		
20		35.65	0.044		
10		26.46	0.032		
0		26.56	0.032		
-10		27.85	0.034		
-20		20.99	0.026		
-30		13.88	0.017		
20	Maximum Voltage	21.90	0.027		
20	BEP	18.36	0.022		

LTE Band 26-Part 90 (QPSK) / 819MHz / BW10M					
Temperature (°C)	Voltage (Volt)	Freq. Dev. (Hz)	Freq. Dev. (ppm)	Limit	Result
50	Normal Voltage	22.96	0.028	2.5ppm	PASS
40		20.41	0.025		
30		14.50	0.018		
20		35.13	0.043		
10		17.21	0.021		
0		15.63	0.019		
-10		29.88	0.036		
-20		27.32	0.033		
-30		26.72	0.033		
20	Maximum Voltage	34.29	0.042		
20	BEP	29.35	0.036		

LTE Band 66 (QPSK) / 1745MHz / BW10M					
Temperature (°C)	Voltage (Volt)	Freq. Dev. (Hz)	Freq. Dev. (ppm)	Limit	Result
50	Normal Voltage	22.92	0.013	2.5ppm	PASS
40		20.83	0.012		
30		27.66	0.016		
20		35.97	0.021		
10		32.42	0.019		
0		25.91	0.015		
-10		13.43	0.008		
-20		11.58	0.007		
-30		24.21	0.014		
20	Maximum Voltage	23.63	0.014		
20	BEP	16.75	0.010		

LTE Band 66 (QPSK) / 1745MHz / BW20M					
Temperature (°C)	Voltage (Volt)	Freq. Dev. (Hz)	Freq. Dev. (ppm)	Limit	Result
50	Normal Voltage	32.76	0.019	2.5ppm	PASS
40		25.72	0.015		
30		21.48	0.012		
20		36.19	0.021		
10		14.27	0.008		
0		13.67	0.008		
-10		30.24	0.017		
-20		36.33	0.021		
-30		31.97	0.018		
20	Maximum Voltage	32.66	0.019		
20	BEP	34.91	0.020		

LTE Band 71 (QPSK) / 680.5MHz / BW10M					
Temperature (°C)	Voltage (Volt)	Freq. Dev. (Hz)	Freq. Dev. (ppm)	Limit	Result
50	Normal Voltage	12.40	0.018	2.5ppm	PASS
40		17.90	0.026		
30		28.29	0.042		
20		23.10	0.034		
10		31.00	0.046		
0		33.23	0.049		
-10		29.18	0.043		
-20		31.01	0.046		
-30		24.74	0.036		
20	Maximum Voltage	15.43	0.023		
20	BEP	23.27	0.034		

LTE Band 71 (QPSK) / 680.5MHz / BW20M					
Temperature (°C)	Voltage (Volt)	Freq. Dev. (Hz)	Freq. Dev. (ppm)	Limit	Result
50	Normal Voltage	18.37	0.027	2.5ppm	PASS
40		26.10	0.038		
30		29.39	0.043		
20		29.60	0.043		
10		25.59	0.038		
0		19.27	0.028		
-10		14.24	0.021		
-20		34.96	0.051		
-30		29.17	0.043		
20	Maximum Voltage	32.72	0.048		
20	BEP	28.95	0.043		

5.5 SPURIOUS EMISSIONS AT ANTENNA TERMINALS

TEST OVERVIEW

The power of any emission outside of the authorized operating frequency ranges must be lower than the transmitter power (P) by a factor of at least 43 + 10 log (P) dB.

For Band 7:

The power of any emission outside of the authorized operating frequency ranges must be lower than the transmitter power (P) by a factor of at least 55 + 10 log (P) dB.

It is measured by means of a calibrated spectrum analyzer and scanned from 30 MHz up to a frequency including its 10th harmonic.

TEST PROCEDURE

1. The testing FCC KDB 971168 D01 v03r01 Section 6.0. and ANSI C63.26-2015-Section 5.7.
2. The EUT was connected to the spectrum analyzer and system simulator via a power divider.
3. The RF output of EUT was connected to the spectrum analyzer by an RF cable and attenuator. The path loss was compensated to the results for each measurement.
4. The middle channel for the highest RF power within the transmitting frequency was measured.
5. The conducted spurious emission for the whole frequency range was taken.
6. The RF fundamental frequency should be excluded against the limit line in the operating frequency band.
7. The limit line is derived from 43 + 10log(P) dB below the transmitter power P(Watts)

= P(W) - [43 + 10log(P)] (dB)

= [30 + 10log(P)] (dBm) - [43 + 10log(P)] (dB)

= -13dBm.

TEST SETUP

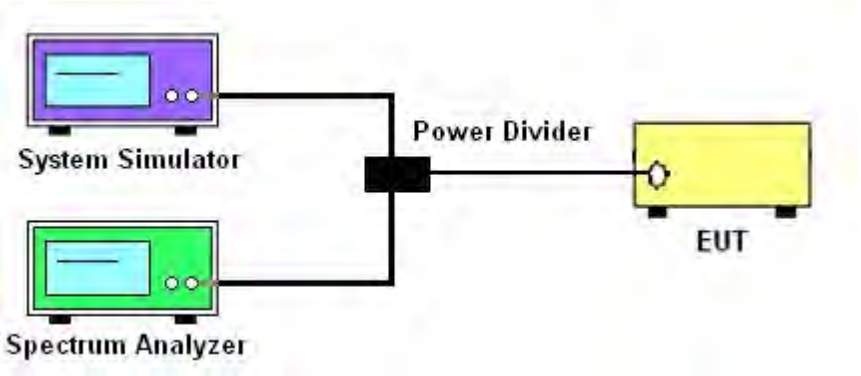

TEST RESULT

Note: The test data please reference to attachment “STS2505051W01_Appendix WCDMA” and “STS2505051W01_Appendix LTE”.

5.6 BAND EDGE

TEST OVERVIEW

1. §22.917(a)

For operations in the 824 – 849 MHz band, the FCC limit is 43 + 10log10(P[Watts]) dB below the transmitter power P(Watts) in a 100kHz bandwidth. However, in the 1MHz bands immediately outside and adjacent to the licensee's frequency block, a resolution bandwidth of at least one percent of the emission bandwidth of the fundamental emission of the transmitter may be employed.

2. §24.238 (a)

For operations in the 1850-1910 and 1930-1990 MHz band, the FCC limit is 43 + 10log10(P[Watts]) dB below the transmitter power P(Watts) in a 1MHz bandwidth. However, in the 1 MHz bands immediately outside and adjacent to the frequency block a resolution bandwidth of at least one percent of the emission bandwidth of the fundamental emission of the transmitter may be employed

3. §27.53 (h)

For operations in the 1710 – 1755 MHz band, the FCC limit is 43 + 10log10(P[Watts]) dB below the transmitter power P(Watts) in a 1 MHz bandwidth. However, in the 1MHz bands immediately outside and adjacent to the licensee's frequency block, a resolution bandwidth of at least one percent of the emission bandwidth of the fundamental emission of the transmitter may be employed.

4. §27.53(m)(4)

For operations in the 2500 MHz ~ 2570 MHz band this section, the attenuation factor shall be not less than 40 + 10 log (P) dB on all frequencies between the channel edge and 5 megahertz from the channel edge, 43 + 10 log (P) dB on all frequencies between 5 megahertz and X megahertz from the channel edge, and 55 + 10 log (P) dB on all frequencies more than X megahertz from the channel edge, where X is the greater of 6 megahertz or the actual emission bandwidth as defined in paragraph (m)(6) of this section. In addition, the attenuation factor shall not be less that 43 + 10 log (P) dB on all frequencies between 2490.5 MHzand 2496 MHz and 55 + 10 log (P) dB at or below 2490.5 MHz. Mobile Satellite Service licenseesoperating on frequencies below 2495 MHz may also submit a documented interference complaintagainst BRS licensees operating on channel BRS Channel 1 on the same terms and conditions as adjacent channel BRS or EBS licensees.

5. §27.53 (g)

For operations in the 698 -746 MHz band, the FCC limit is 43 + 10log10(P[Watts]) dB below the transmitter power P(Watts) in a 100 kHz bandwidth. However, in the 100 kilohertz bands immediately outside and adjacent to a licensee's frequency block, a resolution bandwidth of at least 30 kHz may be employed.

TEST PROCEDURE

1. The testing FCC KDB 971168 D01 v03r01 Section 6.0 and ANSI C63.26-2015-Section 5.7
2. Start and stop frequency were set such that the band edge would be placed in the center of the Plot.
3. The EUT was connected to the spectrum analyzer and system simulator via a power divider.
4. The RF output of EUT was connected to the spectrum analyzer by an RF cable and attenuator. The path loss was compensated to the results for each measurement.
5. The band edges of low and high channels for the highest RF powers were measured.
6. The RF fundamental frequency should be excluded against the limit line in the operating frequency band.
7.The limit line is derived from 43 + 10log(P) dB below the transmitter power P(Watts)

= P(W) - [43 + 10log(P)] (dB)

= [30 + 10log(P)] (dBm) - [43 + 10log(P)] (dB)

= -13dBm.

Band 7:

= P(W)- [55 + 10log(P)] (dB)

= [30 + 10log(P)] (dBm) - [55 + 10log(P)] (dB)

= -25dBm.

TEST SETUP

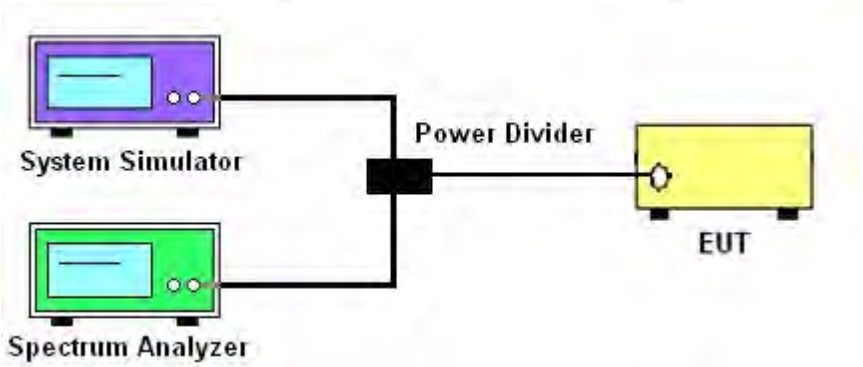

TEST RESULT

Note: The test data please reference to attachment “STS2505051W01_Appendix WCDMA” and “STS2505051W01_Appendix LTE”.

5.7 FIELD STRENGTH OF SPURIOUS RADIATION MEASUREMENT

TEST OVERVIEW

Radiated spurious emissions measurements are performed using the substitution method described in ANSI C63.26-2015 with the EUT transmitting into an integral antenna. Measurements on signalsoperating below 1GHz are performed using horizontally and vertically polarized tuned dipole antennas.Measurements on signals operating above 1GHz are performed using vertically and horizontally polarizedhorn antennas. All measurements are performed as peak measurements while the EUT isoperating at maximum power and at the appropriate frequencies.

It is measured by means of a calibrated spectrum analyzer and scanned from 30 MHz up to a frequency including its 10th harmonic.

TEST PROCEDURE

1. The testing FCC KDB 971168 D01 Section 5.8 and ANSI C63.26-2015-Section 5.5.
2. RBW = 100kHz for emissions below 1GHz and 1MHz for emissions above 1GHz
3. VBW ≥ 3 x RBW
4. Span = 1.5 times the OBW
5.No. of sweep points > 2 x span/RBW
6. Detector = Peak
7. Trace mode = max hold
8. The trace was allowed to stabilize
9. Effective Isotropic Spurious Radiation was measured by substitution method according to TIA/EIA-603-D. The EUT was replaced by the substitution antenna at same location, and then a known power from S.G. was applied into the dipole antenna through a Tx cable, and then recorded the maximum Analyzer reading through raised and lowered the test antenna.

PMea=S.G Level+ Ant-Cable loss; Margin=PMea-Limit.

TEST SETUP

For radiated test from 30MHz to 1GHz

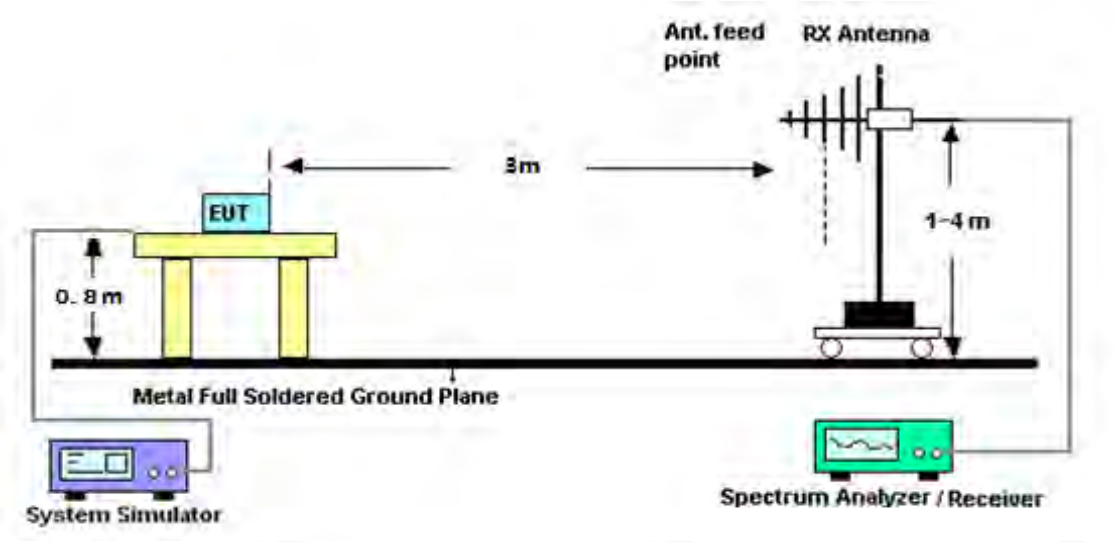

For radiated test from above 1GHz

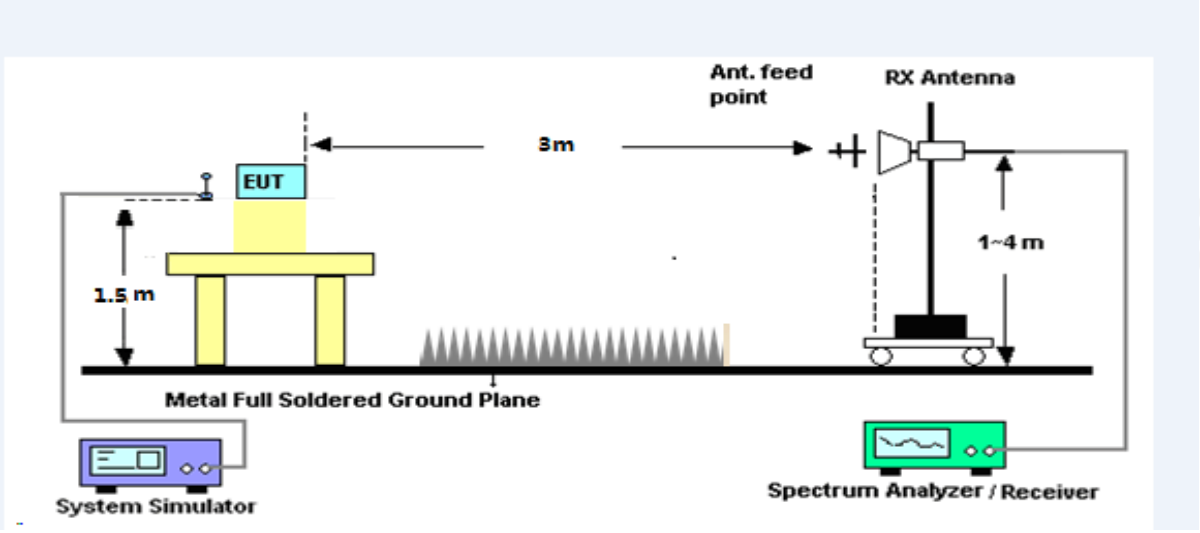

TEST RESULT

Note: (1) Spurious emissions which are attenuated by more than 20dB below the permissible value for frequeny below 1000MHz.

(2) Above 3.5GHz amplitude of spurious emissions which are attenuated by more than 20dB below the permissible value

(3)Test is divided into three directions, X/Y/Z. X pattern for the worst.

WCDMA Band 2: (30-20000)MHz							
The Worst Test Results for Channel 9262/1852.4MHz							
Frequency(MHz)	S G.Lev (dBm)	Ant(dBi)	Loss	PMea (dBm)	Limit （dBm）	Margin (dBm)	Polarity
3704.19	-34.58	12.60	12.93	-34.91	-13.00	-21.91	H
5557.32	-35.19	13.10	17.11	-39.20	-13.00	-26.20	H
7409.95	-33.46	11.50	22.20	-44.16	-13.00	-31.16	H
3704.19	-35.88	12.60	12.93	-36.21	-13.00	-23.21	V
5557.32	-34.36	13.10	17.11	-38.37	-13.00	-25.37	V
7409.95	-32.48	11.50	22.20	-43.18	-13.00	-30.18	V
The Worst Test Results for Channel 9400/1880MHz							
Frequency(MHz)	S G.Lev (dBm)	Ant(dBi)	Loss	PMea (dBm)	Limit （dBm）	Margin (dBm)	Polarity
3759.85	-33.61	12.60	12.93	-33.94	-13.00	-20.94	H
5639.83	-34.56	13.10	17.11	-38.57	-13.00	-25.57	H
7519.85	-33.48	11.50	22.20	-44.18	-13.00	-31.18	H
3759.85	-35.04	12.60	12.93	-35.37	-13.00	-22.37	V
5639.83	-34.88	13.10	17.11	-38.89	-13.00	-25.89	V
7519.85	-31.86	11.50	22.20	-42.56	-13.00	-29.56	V
The Worst Test Results for Channel 9538/1907.6MHz							
Frequency(MHz)	S G.Lev (dBm)	Ant(dBi)	Loss	PMea (dBm)	Limit （dBm）	Margin (dBm)	Polarity
3815.37	-33.91	12.60	12.93	-34.24	-13.00	-21.24	H
5722.79	-35.34	13.10	17.11	-39.35	-13.00	-26.35	H
7630.42	-33.21	11.50	22.20	-43.91	-13.00	-30.91	H
3815.37	-35.06	12.60	12.93	-35.39	-13.00	-22.39	V
5722.79	-33.99	13.10	17.11	-38.00	-13.00	-25.00	V
7630.42	-31.71	11.50	22.20	-42.41	-13.00	-29.41	V

HSDPA Band 2: (30-20000)MHz							
The Worst Test Results for Channel 9262/1852.4MHz							
Frequency(MHz)	S G.Lev (dBm)	Ant(dBi)	Loss	PMea (dBm)	Limit （dBm）	Margin (dBm)	Polarity
3704.35	-34.74	12.60	12.93	-35.07	-13.00	-22.07	H
5557.47	-34.42	13.10	17.11	-38.43	-13.00	-25.43	H
7409.69	-32.29	11.50	22.20	-42.99	-13.00	-29.99	H
3704.35	-34.73	12.60	12.93	-35.06	-13.00	-22.06	V
5557.47	-35.04	13.10	17.11	-39.05	-13.00	-26.05	V
7409.69	-32.54	11.50	22.20	-43.24	-13.00	-30.24	V
The Worst Test Results for Channel 9400/1880MHz							
Frequency(MHz)	S G.Lev (dBm)	Ant(dBi)	Loss	PMea (dBm)	Limit （dBm）	Margin (dBm)	Polarity
3759.77	-33.63	12.60	12.93	-33.96	-13.00	-20.96	H
5640.06	-34.49	13.10	17.11	-38.50	-13.00	-25.50	H
7519.89	-32.23	11.50	22.20	-42.93	-13.00	-29.93	H
3759.77	-35.72	12.60	12.93	-36.05	-13.00	-23.05	V
5640.06	-34.00	13.10	17.11	-38.01	-13.00	-25.01	V
7519.89	-33.01	11.50	22.20	-43.71	-13.00	-30.71	V
The Worst Test Results for Channel 9538/1907.6MHz							
Frequency(MHz)	S G.Lev (dBm)	Ant(dBi)	Loss	PMea (dBm)	Limit （dBm）	Margin (dBm)	Polarity
3815.54	-33.62	12.60	12.93	-33.95	-13.00	-20.95	H
5722.86	-35.45	13.10	17.11	-39.46	-13.00	-26.46	H
7630.43	-33.27	11.50	22.20	-43.97	-13.00	-30.97	H
3815.54	-35.10	12.60	12.93	-35.43	-13.00	-22.43	V
5722.86	-34.84	13.10	17.11	-38.85	-13.00	-25.85	V
7630.43	-32.09	11.50	22.20	-42.79	-13.00	-29.79	V

HSUPA Band 2: (30-20000)MHz							
The Worst Test Results for Channel 9262/1852.4MHz							
Frequency(MHz)	S G.Lev (dBm)	Ant(dBi)	Loss	PMea (dBm)	Limit （dBm）	Margin (dBm)	Polarity
3704.49	-34.59	12.60	12.93	-34.92	-13.00	-21.92	H
5557.35	-34.39	13.10	17.11	-38.40	-13.00	-25.40	H
7409.56	-33.16	11.50	22.20	-43.86	-13.00	-30.86	H
3704.49	-35.33	12.60	12.93	-35.66	-13.00	-22.66	V
5557.35	-35.18	13.10	17.11	-39.19	-13.00	-26.19	V
7409.56	-31.80	11.50	22.20	-42.50	-13.00	-29.50	V
The Worst Test Results for Channel 9400/1880MHz							
Frequency(MHz)	S G.Lev (dBm)	Ant(dBi)	Loss	PMea (dBm)	Limit （dBm）	Margin (dBm)	Polarity
3759.84	-34.32	12.60	12.93	-34.65	-13.00	-21.65	H
5640.07	-34.00	13.10	17.11	-38.01	-13.00	-25.01	H
7519.93	-33.14	11.50	22.20	-43.84	-13.00	-30.84	H
3759.84	-34.72	12.60	12.93	-35.05	-13.00	-22.05	V
5640.07	-35.17	13.10	17.11	-39.18	-13.00	-26.18	V
7519.93	-32.19	11.50	22.20	-42.89	-13.00	-29.89	V
The Worst Test Results for Channel 9538/1907.6MHz							
Frequency(MHz)	S G.Lev (dBm)	Ant(dBi)	Loss	PMea (dBm)	Limit （dBm）	Margin (dBm)	Polarity
3815.52	-34.57	12.60	12.93	-34.90	-13.00	-21.90	H
5722.75	-34.77	13.10	17.11	-38.78	-13.00	-25.78	H
7630.41	-32.88	11.50	22.20	-43.58	-13.00	-30.58	H
3815.52	-34.92	12.60	12.93	-35.25	-13.00	-22.25	V
5722.75	-34.47	13.10	17.11	-38.48	-13.00	-25.48	V
7630.41	-31.77	11.50	22.20	-42.47	-13.00	-29.47	V

WCDMA Band 4: (30-18000)MHz							
The Worst Test Results for Channel 1312/1712.4MHz							
Frequency(MHz)	S G.Lev (dBm)	Ant(dBi)	Loss	PMea (dBm)	Limit （dBm）	Margin (dBm)	Polarity
3424.85	-33.69	12.90	12.05	-32.84	-13.00	-19.84	H
5137.04	-34.20	12.80	16.27	-37.67	-13.00	-24.67	H
6849.68	-33.11	12.30	20.13	-40.94	-13.00	-27.94	H
3424.85	-35.64	12.90	12.05	-34.79	-13.00	-21.79	V
5137.04	-33.79	12.80	16.27	-37.26	-13.00	-24.26	V
6849.68	-32.23	12.30	20.13	-40.06	-13.00	-27.06	V
The Worst Test Results for Channel 1450/1740.0MHz							
Frequency(MHz)	S G.Lev (dBm)	Ant(dBi)	Loss	PMea (dBm)	Limit （dBm）	Margin (dBm)	Polarity
3480.09	-34.67	12.90	12.05	-33.82	-13.00	-20.82	H
5219.98	-34.37	12.80	16.27	-37.84	-13.00	-24.84	H
6959.89	-33.07	12.30	20.13	-40.90	-13.00	-27.90	H
3480.09	-34.53	12.90	12.05	-33.68	-13.00	-20.68	V
5219.98	-34.75	12.80	16.27	-38.22	-13.00	-25.22	V
6959.89	-32.06	12.30	20.13	-39.89	-13.00	-26.89	V
The Worst Test Results for Channel 1513/1752.6MHz							
Frequency(MHz)	S G.Lev (dBm)	Ant(dBi)	Loss	PMea (dBm)	Limit （dBm）	Margin (dBm)	Polarity
3505.33	-33.92	12.90	12.05	-33.07	-13.00	-20.07	H
5257.57	-35.45	12.80	16.27	-38.92	-13.00	-25.92	H
7010.17	-32.34	12.30	20.13	-40.17	-13.00	-27.17	H
3505.33	-35.31	12.90	12.05	-34.46	-13.00	-21.46	V
5257.57	-34.91	12.80	16.27	-38.38	-13.00	-25.38	V
7010.17	-32.25	12.30	20.13	-40.08	-13.00	-27.08	V

HSDPA Band 4: (30-18000)MHz							
The Worst Test Results for Channel 1312/1712.4MHz							
Frequency(MHz)	S G.Lev (dBm)	Ant(dBi)	Loss	PMea (dBm)	Limit （dBm）	Margin (dBm)	Polarity
3424.64	-34.91	12.90	12.05	-34.06	-13.00	-21.06	H
5137.10	-34.46	12.80	16.27	-37.93	-13.00	-24.93	H
6849.87	-33.02	12.30	20.13	-40.85	-13.00	-27.85	H
3424.64	-35.47	12.90	12.05	-34.62	-13.00	-21.62	V
5137.10	-33.94	12.80	16.27	-37.41	-13.00	-24.41	V
6849.87	-32.65	12.30	20.13	-40.48	-13.00	-27.48	V
The Worst Test Results for Channel 1450/1740.0MHz							
Frequency(MHz)	S G.Lev (dBm)	Ant(dBi)	Loss	PMea (dBm)	Limit （dBm）	Margin (dBm)	Polarity
3479.82	-33.78	12.90	12.05	-32.93	-13.00	-19.93	H
5220.07	-34.96	12.80	16.27	-38.43	-13.00	-25.43	H
6960.03	-33.07	12.30	20.13	-40.90	-13.00	-27.90	H
3479.82	-34.82	12.90	12.05	-33.97	-13.00	-20.97	V
5220.07	-34.54	12.80	16.27	-38.01	-13.00	-25.01	V
6960.03	-31.95	12.30	20.13	-39.78	-13.00	-26.78	V
The Worst Test Results for Channel 1513/1752.6MHz							
Frequency(MHz)	S G.Lev (dBm)	Ant(dBi)	Loss	PMea (dBm)	Limit （dBm）	Margin (dBm)	Polarity
3505.18	-34.92	12.90	12.05	-34.07	-13.00	-21.07	H
5257.82	-34.16	12.80	16.27	-37.63	-13.00	-24.63	H
7010.42	-32.79	12.30	20.13	-40.62	-13.00	-27.62	H
3505.18	-35.17	12.90	12.05	-34.32	-13.00	-21.32	V
5257.82	-34.45	12.80	16.27	-37.92	-13.00	-24.92	V
7010.42	-33.21	12.30	20.13	-41.04	-13.00	-28.04	V

HSUPA Band 4: (30-18000)MHz							
The Worst Test Results for Channel 1312/1712.4MHz							
Frequency(MHz)	S G.Lev (dBm)	Ant(dBi)	Loss	PMea (dBm)	Limit （dBm）	Margin (dBm)	Polarity
3425.08	-33.68	12.90	12.05	-32.83	-13.00	-19.83	H
5137.44	-34.34	12.80	16.27	-37.81	-13.00	-24.81	H
6849.73	-32.21	12.30	20.13	-40.04	-13.00	-27.04	H
3425.08	-34.81	12.90	12.05	-33.96	-13.00	-20.96	V
5137.44	-35.04	12.80	16.27	-38.51	-13.00	-25.51	V
6849.73	-33.20	12.30	20.13	-41.03	-13.00	-28.03	V
The Worst Test Results for Channel 1450/1740.0MHz							
Frequency(MHz)	S G.Lev (dBm)	Ant(dBi)	Loss	PMea (dBm)	Limit （dBm）	Margin (dBm)	Polarity
3479.90	-33.77	12.90	12.05	-32.92	-13.00	-19.92	H
5219.78	-34.50	12.80	16.27	-37.97	-13.00	-24.97	H
6959.93	-33.16	12.30	20.13	-40.99	-13.00	-27.99	H
3479.90	-35.44	12.90	12.05	-34.59	-13.00	-21.59	V
5219.78	-34.07	12.80	16.27	-37.54	-13.00	-24.54	V
6959.93	-31.72	12.30	20.13	-39.55	-13.00	-26.55	V
The Worst Test Results for Channel 1513/1752.6MHz							
Frequency(MHz)	S G.Lev (dBm)	Ant(dBi)	Loss	PMea (dBm)	Limit （dBm）	Margin (dBm)	Polarity
3505.03	-34.47	12.90	12.05	-33.62	-13.00	-20.62	H
5257.85	-35.07	12.80	16.27	-38.54	-13.00	-25.54	H
7010.24	-32.33	12.30	20.13	-40.16	-13.00	-27.16	H
3505.03	-34.66	12.90	12.05	-33.81	-13.00	-20.81	V
5257.85	-34.43	12.80	16.27	-37.90	-13.00	-24.90	V
7010.24	-32.67	12.30	20.13	-40.50	-13.00	-27.50	V

WCDMA Band 5: (30-9000)MHz							
The wost testresults channel 4132/826.4MHz							
Frequency(MHz)	S G.Lev (dBm)	Ant(dBi)	Loss	PMea (dBm)	Limit （dBm）	Margin (dBm)	Polarity
1652.79	-40.22	9.40	4.75	-35.57	-13.00	-22.57	H
2479.48	-39.21	10.60	8.39	-37.00	-13.00	-24.00	H
3305.75	-31.72	12.00	11.79	-31.51	-13.00	-18.51	H
1652.79	-43.51	9.40	4.75	-38.86	-13.00	-25.86	V
2479.48	-44.41	10.60	8.39	-42.20	-13.00	-29.20	V
3305.75	-42.69	12.00	11.79	-42.48	-13.00	-29.48	V
The Worst Test Results Channel 4182/836.4MHz							
Frequency(MHz)	S G.Lev (dBm)	Ant(dBi)	Loss	PMea (dBm)	Limit （dBm）	Margin (dBm)	Polarity
1672.88	-41.47	9.40	4.75	-36.82	-13.00	-23.82	H
2509.37	-39.57	10.60	8.39	-37.36	-13.00	-24.36	H
3345.61	-31.60	12.00	11.79	-31.39	-13.00	-18.39	H
1672.88	-44.00	9.40	4.75	-39.35	-13.00	-26.35	V
2509.37	-44.06	10.60	8.39	-41.85	-13.00	-28.85	V
3345.61	-43.71	12.00	11.79	-43.50	-13.00	-30.50	V
The Worst Test Results Channel 4233/846.6MHz							
Frequency(MHz)	S G.Lev (dBm)	Ant(dBi)	Loss	PMea (dBm)	Limit （dBm）	Margin (dBm)	Polarity
1693.63	-40.86	9.40	4.75	-36.21	-13.00	-23.21	H
2539.69	-40.25	10.60	8.39	-38.04	-13.00	-25.04	H
3386.37	-31.58	12.00	11.79	-31.37	-13.00	-18.37	H
1693.63	-43.87	9.40	4.75	-39.22	-13.00	-26.22	V
2539.69	-44.16	10.60	8.39	-41.95	-13.00	-28.95	V
3386.37	-43.34	12.00	11.79	-43.13	-13.00	-30.13	V

HSDPA Band 5: (30-9000)MHz							
The wost testresults channel 4132/826.4MHz							
Frequency(MHz)	S G.Lev (dBm)	Ant(dBi)	Loss	PMea (dBm)	Limit （dBm）	Margin (dBm)	Polarity
1652.59	-40.63	9.40	4.75	-35.98	-13.00	-22.98	H
2479.13	-39.57	10.60	8.39	-37.36	-13.00	-24.36	H
3305.86	-31.93	12.00	11.79	-31.72	-13.00	-18.72	H
1652.59	-43.40	9.40	4.75	-38.75	-13.00	-25.75	V
2479.13	-45.23	10.60	8.39	-43.02	-13.00	-30.02	V
3305.86	-43.73	12.00	11.79	-43.52	-13.00	-30.52	V
The Worst Test Results Channel 4182/836.4MHz							
Frequency(MHz)	S G.Lev (dBm)	Ant(dBi)	Loss	PMea (dBm)	Limit （dBm）	Margin (dBm)	Polarity
1672.86	-40.81	9.40	4.75	-36.16	-13.00	-23.16	H
2509.09	-39.39	10.60	8.39	-37.18	-13.00	-24.18	H
3345.68	-31.79	12.00	11.79	-31.58	-13.00	-18.58	H
1672.86	-44.41	9.40	4.75	-39.76	-13.00	-26.76	V
2509.09	-44.26	10.60	8.39	-42.05	-13.00	-29.05	V
3345.68	-42.96	12.00	11.79	-42.75	-13.00	-29.75	V
The Worst Test Results Channel 4233/846.6MHz							
Frequency(MHz)	S G.Lev (dBm)	Ant(dBi)	Loss	PMea (dBm)	Limit （dBm）	Margin (dBm)	Polarity
1693.58	-40.82	9.40	4.75	-36.17	-13.00	-23.17	H
2539.52	-39.95	10.60	8.39	-37.74	-13.00	-24.74	H
3386.20	-31.86	12.00	11.79	-31.65	-13.00	-18.65	H
1693.58	-44.19	9.40	4.75	-39.54	-13.00	-26.54	V
2539.52	-45.15	10.60	8.39	-42.94	-13.00	-29.94	V
3386.20	-43.62	12.00	11.79	-43.41	-13.00	-30.41	V

HSUPA Band 5: (30-9000)MHz							
The wost testresults channel 4132/826.4MHz							
Frequency(MHz)	S G.Lev (dBm)	Ant(dBi)	Loss	PMea (dBm)	Limit （dBm）	Margin (dBm)	Polarity
1652.86	-40.85	9.40	4.75	-36.20	-13.00	-23.20	H
2479.09	-40.17	10.60	8.39	-37.96	-13.00	-24.96	H
3305.63	-31.80	12.00	11.79	-31.59	-13.00	-18.59	H
1652.86	-44.21	9.40	4.75	-39.56	-13.00	-26.56	V
2479.09	-44.95	10.60	8.39	-42.74	-13.00	-29.74	V
3305.63	-42.80	12.00	11.79	-42.59	-13.00	-29.59	V
The Worst Test Results Channel 4182/836.4MHz							
Frequency(MHz)	S G.Lev (dBm)	Ant(dBi)	Loss	PMea (dBm)	Limit （dBm）	Margin (dBm)	Polarity
1672.82	-40.62	9.40	4.75	-35.97	-13.00	-22.97	H
2509.30	-39.44	10.60	8.39	-37.23	-13.00	-24.23	H
3345.60	-31.54	12.00	11.79	-31.33	-13.00	-18.33	H
1672.82	-43.40	9.40	4.75	-38.75	-13.00	-25.75	V
2509.30	-44.82	10.60	8.39	-42.61	-13.00	-29.61	V
3345.60	-43.70	12.00	11.79	-43.49	-13.00	-30.49	V
The Worst Test Results Channel 4233/846.6MHz							
Frequency(MHz)	S G.Lev (dBm)	Ant(dBi)	Loss	PMea (dBm)	Limit （dBm）	Margin (dBm)	Polarity
1693.44	-40.21	9.40	4.75	-35.56	-13.00	-22.56	H
2539.84	-40.61	10.60	8.39	-38.40	-13.00	-25.40	H
3386.39	-31.69	12.00	11.79	-31.48	-13.00	-18.48	H
1693.44	-43.51	9.40	4.75	-38.86	-13.00	-25.86	V
2539.84	-45.28	10.60	8.39	-43.07	-13.00	-30.07	V
3386.39	-42.79	12.00	11.79	-42.58	-13.00	-29.58	V

LTE Band 2 / 1.4MHz / QPSK / RB Size 1 Offset 0/ The Worst Test Results for Lowest							
Frequency(MHz)	S G.Lev (dBm)	Ant(dBi)	Loss	PMea (dBm)	Limit （dBm）	Margin (dBm)	Polarity
3701.00	-34.07	12.60	12.93	-34.40	-13.00	-21.40	H
5552.05	-34.30	13.10	17.11	-38.31	-13.00	-25.31	H
7402.84	-32.86	11.50	22.20	-43.56	-13.00	-30.56	H
3701.00	-36.02	12.60	12.93	-36.35	-13.00	-23.35	V
5552.05	-33.79	13.10	17.11	-37.80	-13.00	-24.80	V
7402.84	-32.74	11.50	22.20	-43.44	-13.00	-30.44	V
LTE Band 2 / 1.4MHz / QPSK / RB Size 1 Offset 0/ The Worst Test Results for Middle							
Frequency(MHz)	S G.Lev (dBm)	Ant(dBi)	Loss	PMea (dBm)	Limit （dBm）	Margin (dBm)	Polarity
3759.93	-34.72	12.60	12.93	-35.05	-13.00	-22.05	H
5640.06	-35.29	13.10	17.11	-39.30	-13.00	-26.30	H
7519.85	-32.47	11.50	22.20	-43.17	-13.00	-30.17	H
3759.93	-35.51	12.60	12.93	-35.84	-13.00	-22.84	V
5640.06	-35.05	13.10	17.11	-39.06	-13.00	-26.06	V
7519.85	-31.72	11.50	22.20	-42.42	-13.00	-29.42	V
LTE Band 2 / 1.4MHz / QPSK / RB Size 1 Offset 0/ The Worst Test Results for Highest							
Frequency(MHz)	S G.Lev (dBm)	Ant(dBi)	Loss	PMea (dBm)	Limit （dBm）	Margin (dBm)	Polarity
3818.44	-33.74	12.60	12.93	-34.07	-13.00	-21.07	H
5727.77	-35.32	13.10	17.11	-39.33	-13.00	-26.33	H
7636.97	-32.78	11.50	22.20	-43.48	-13.00	-30.48	H
3818.44	-34.68	12.60	12.93	-35.01	-13.00	-22.01	V
5727.77	-35.03	13.10	17.11	-39.04	-13.00	-26.04	V
7636.97	-32.42	11.50	22.20	-43.12	-13.00	-30.12	V

LTE Band 2 / 3MHz / QPSK / RB Size 1 Offset 0/ The Worst Test Results for Lowest							
Frequency(MHz)	S G.Lev (dBm)	Ant(dBi)	Loss	PMea (dBm)	Limit （dBm）	Margin (dBm)	Polarity
3703.07	-34.75	12.60	12.93	-35.08	-13.00	-22.08	H
5554.48	-34.52	13.10	17.11	-38.53	-13.00	-25.53	H
7405.98	-32.27	11.50	22.20	-42.97	-13.00	-29.97	H
3703.07	-35.12	12.60	12.93	-35.45	-13.00	-22.45	V
5554.48	-33.99	13.10	17.11	-38.00	-13.00	-25.00	V
7405.98	-32.81	11.50	22.20	-43.51	-13.00	-30.51	V
LTE Band 2 / 3MHz / QPSK / RB Size 1 Offset 0/ The Worst Test Results for Middle							
Frequency(MHz)	S G.Lev (dBm)	Ant(dBi)	Loss	PMea (dBm)	Limit （dBm）	Margin (dBm)	Polarity
3759.96	-34.40	12.60	12.93	-34.73	-13.00	-21.73	H
5639.98	-34.78	13.10	17.11	-38.79	-13.00	-25.79	H
7519.91	-33.62	11.50	22.20	-44.32	-13.00	-31.32	H
3759.96	-35.42	12.60	12.93	-35.75	-13.00	-22.75	V
5639.98	-35.12	13.10	17.11	-39.13	-13.00	-26.13	V
7519.91	-31.78	11.50	22.20	-42.48	-13.00	-29.48	V
LTE Band 2 / 3MHz / QPSK / RB Size 1 Offset 0/ The Worst Test Results for Highest							
Frequency(MHz)	S G.Lev (dBm)	Ant(dBi)	Loss	PMea (dBm)	Limit （dBm）	Margin (dBm)	Polarity
3816.84	-33.74	12.60	12.93	-34.07	-13.00	-21.07	H
5725.70	-34.22	13.10	17.11	-38.23	-13.00	-25.23	H
7634.27	-32.55	11.50	22.20	-43.25	-13.00	-30.25	H
3816.84	-35.13	12.60	12.93	-35.46	-13.00	-22.46	V
5725.70	-34.33	13.10	17.11	-38.34	-13.00	-25.34	V
7634.27	-32.95	11.50	22.20	-43.65	-13.00	-30.65	V

LTE Band 2 / 5MHz / QPSK / RB Size 1 Offset 0/ The Worst Test Results for Lowest							
Frequency(MHz)	S G.Lev (dBm)	Ant(dBi)	Loss	PMea (dBm)	Limit （dBm）	Margin (dBm)	Polarity
3705.13	-33.62	12.60	12.93	-33.95	-13.00	-20.95	H
5557.41	-34.72	13.10	17.11	-38.73	-13.00	-25.73	H
7410.06	-33.14	11.50	22.20	-43.84	-13.00	-30.84	H
3705.13	-36.00	12.60	12.93	-36.33	-13.00	-23.33	V
5557.41	-34.83	13.10	17.11	-38.84	-13.00	-25.84	V
7410.06	-32.67	11.50	22.20	-43.37	-13.00	-30.37	V
LTE Band 2 / 5MHz / QPSK / RB Size 1 Offset 0/ The Worst Test Results for Middle							
Frequency(MHz)	S G.Lev (dBm)	Ant(dBi)	Loss	PMea (dBm)	Limit （dBm）	Margin (dBm)	Polarity
3759.88	-33.71	12.60	12.93	-34.04	-13.00	-21.04	H
5639.80	-34.76	13.10	17.11	-38.77	-13.00	-25.77	H
7519.99	-32.50	11.50	22.20	-43.20	-13.00	-30.20	H
3759.88	-34.91	12.60	12.93	-35.24	-13.00	-22.24	V
5639.80	-34.22	13.10	17.11	-38.23	-13.00	-25.23	V
7519.99	-33.11	11.50	22.20	-43.81	-13.00	-30.81	V
LTE Band 2 / 5MHz / QPSK / RB Size 1 Offset 0/ The Worst Test Results for Highest							
Frequency(MHz)	S G.Lev (dBm)	Ant(dBi)	Loss	PMea (dBm)	Limit （dBm）	Margin (dBm)	Polarity
3814.94	-34.10	12.60	12.93	-34.43	-13.00	-21.43	H
5722.26	-35.24	13.10	17.11	-39.25	-13.00	-26.25	H
7630.13	-33.17	11.50	22.20	-43.87	-13.00	-30.87	H
3814.94	-34.72	12.60	12.93	-35.05	-13.00	-22.05	V
5722.26	-34.55	13.10	17.11	-38.56	-13.00	-25.56	V
7630.13	-32.76	11.50	22.20	-43.46	-13.00	-30.46	V

LTE Band 2 / 10MHz / QPSK / RB Size 1 Offset 0/ The Worst Test Results for Lowest							
Frequency(MHz)	S G.Lev (dBm)	Ant(dBi)	Loss	PMea (dBm)	Limit （dBm）	Margin (dBm)	Polarity
3710.06	-34.17	12.60	12.93	-34.50	-13.00	-21.50	H
5564.99	-34.29	13.10	17.11	-38.30	-13.00	-25.30	H
7419.87	-33.62	11.50	22.20	-44.32	-13.00	-31.32	H
3710.06	-35.02	12.60	12.93	-35.35	-13.00	-22.35	V
5564.99	-34.38	13.10	17.11	-38.39	-13.00	-25.39	V
7419.87	-32.94	11.50	22.20	-43.64	-13.00	-30.64	V
LTE Band 2 / 10MHz / QPSK / RB Size 1 Offset 0/ The Worst Test Results for Middle							
Frequency(MHz)	S G.Lev (dBm)	Ant(dBi)	Loss	PMea (dBm)	Limit （dBm）	Margin (dBm)	Polarity
3760.08	-34.14	12.60	12.93	-34.47	-13.00	-21.47	H
5639.81	-34.48	13.10	17.11	-38.49	-13.00	-25.49	H
7519.84	-32.73	11.50	22.20	-43.43	-13.00	-30.43	H
3760.08	-34.64	12.60	12.93	-34.97	-13.00	-21.97	V
5639.81	-35.00	13.10	17.11	-39.01	-13.00	-26.01	V
7519.84	-32.68	11.50	22.20	-43.38	-13.00	-30.38	V
LTE Band 2 / 10MHz / QPSK / RB Size 1 Offset 0/ The Worst Test Results for Highest							
Frequency(MHz)	S G.Lev (dBm)	Ant(dBi)	Loss	PMea (dBm)	Limit （dBm）	Margin (dBm)	Polarity
3810.19	-34.62	12.60	12.93	-34.95	-13.00	-21.95	H
5714.79	-34.17	13.10	17.11	-38.18	-13.00	-25.18	H
7620.13	-32.90	11.50	22.20	-43.60	-13.00	-30.60	H
3810.19	-35.02	12.60	12.93	-35.35	-13.00	-22.35	V
5714.79	-34.25	13.10	17.11	-38.26	-13.00	-25.26	V
7620.13	-32.97	11.50	22.20	-43.67	-13.00	-30.67	V

LTE Band 2 / 15MHz / QPSK / RB Size 1 Offset 0/ The Worst Test Results for Lowest							
Frequency(MHz)	S G.Lev (dBm)	Ant(dBi)	Loss	PMea (dBm)	Limit （dBm）	Margin (dBm)	Polarity
3714.85	-34.56	12.60	12.93	-34.89	-13.00	-21.89	H
5572.28	-35.02	13.10	17.11	-39.03	-13.00	-26.03	H
7430.56	-32.78	11.50	22.20	-43.48	-13.00	-30.48	H
3714.85	-34.91	12.60	12.93	-35.24	-13.00	-22.24	V
5572.28	-33.85	13.10	17.11	-37.86	-13.00	-24.86	V
7430.56	-32.15	11.50	22.20	-42.85	-13.00	-29.85	V
LTE Band 2 / 15MHz / QPSK / RB Size 1 Offset 0/ The Worst Test Results for Middle							
Frequency(MHz)	S G.Lev (dBm)	Ant(dBi)	Loss	PMea (dBm)	Limit （dBm）	Margin (dBm)	Polarity
3759.93	-33.52	12.60	12.93	-33.85	-13.00	-20.85	H
5639.83	-34.40	13.10	17.11	-38.41	-13.00	-25.41	H
7520.20	-32.17	11.50	22.20	-42.87	-13.00	-29.87	H
3759.93	-35.10	12.60	12.93	-35.43	-13.00	-22.43	V
5639.83	-34.64	13.10	17.11	-38.65	-13.00	-25.65	V
7520.20	-32.28	11.50	22.20	-42.98	-13.00	-29.98	V
LTE Band 2 / 15MHz / QPSK / RB Size 1 Offset 0/ The Worst Test Results for Highest							
Frequency(MHz)	S G.Lev (dBm)	Ant(dBi)	Loss	PMea (dBm)	Limit （dBm）	Margin (dBm)	Polarity
3805.05	-34.30	12.60	12.93	-34.63	-13.00	-21.63	H
5707.64	-34.76	13.10	17.11	-38.77	-13.00	-25.77	H
7610.11	-32.92	11.50	22.20	-43.62	-13.00	-30.62	H
3805.05	-35.81	12.60	12.93	-36.14	-13.00	-23.14	V
5707.64	-33.94	13.10	17.11	-37.95	-13.00	-24.95	V
7610.11	-32.72	11.50	22.20	-43.42	-13.00	-30.42	V

LTE Band 2 / 20MHz / QPSK / RB Size 1 Offset 0/ The Worst Test Results for Lowest							
Frequency(MHz)	S G.Lev (dBm)	Ant(dBi)	Loss	PMea (dBm)	Limit （dBm）	Margin (dBm)	Polarity
3720.14	-34.23	12.60	12.93	-34.56	-13.00	-21.56	H
5580.52	-34.32	13.10	17.11	-38.33	-13.00	-25.33	H
7439.75	-32.96	11.50	22.20	-43.66	-13.00	-30.66	H
3720.14	-34.69	12.60	12.93	-35.02	-13.00	-22.02	V
5580.52	-34.50	13.10	17.11	-38.51	-13.00	-25.51	V
7439.75	-32.44	11.50	22.20	-43.14	-13.00	-30.14	V
LTE Band 2 / 20MHz / QPSK / RB Size 1 Offset 0/ The Worst Test Results for Middle							
Frequency(MHz)	S G.Lev (dBm)	Ant(dBi)	Loss	PMea (dBm)	Limit （dBm）	Margin (dBm)	Polarity
3759.89	-34.36	12.60	12.93	-34.69	-13.00	-21.69	H
5640.17	-34.56	13.10	17.11	-38.57	-13.00	-25.57	H
7520.18	-32.47	11.50	22.20	-43.17	-13.00	-30.17	H
3759.89	-35.96	12.60	12.93	-36.29	-13.00	-23.29	V
5640.17	-34.42	13.10	17.11	-38.43	-13.00	-25.43	V
7520.18	-32.69	11.50	22.20	-43.39	-13.00	-30.39	V
LTE Band 2 / 20MHz / QPSK / RB Size 1 Offset 0/ The Worst Test Results for Highest							
Frequency(MHz)	S G.Lev (dBm)	Ant(dBi)	Loss	PMea (dBm)	Limit （dBm）	Margin (dBm)	Polarity
3800.08	-33.94	12.60	12.93	-34.27	-13.00	-21.27	H
5700.13	-34.33	13.10	17.11	-38.34	-13.00	-25.34	H
7599.93	-32.92	11.50	22.20	-43.62	-13.00	-30.62	H
3800.08	-34.59	12.60	12.93	-34.92	-13.00	-21.92	V
5700.13	-34.47	13.10	17.11	-38.48	-13.00	-25.48	V
7599.93	-32.76	11.50	22.20	-43.46	-13.00	-30.46	V

LTE Band 4 / 1.4MHz / QPSK / RB Size 1 Offset 0/ The Worst Test Results for Lowest							
Frequency(MHz)	S G.Lev (dBm)	Ant(dBi)	Loss	PMea (dBm)	Limit （dBm）	Margin (dBm)	Polarity
3421.30	-33.99	12.90	12.56	-33.65	-13.00	-20.65	H
5131.76	-35.49	13.10	16.32	-38.71	-13.00	-25.71	H
6842.39	-33.27	12.33	21.13	-42.07	-13.00	-29.07	H
3421.30	-35.54	12.90	12.56	-35.20	-13.00	-22.20	V
5131.76	-34.75	13.10	16.32	-37.97	-13.00	-24.97	V
6842.39	-33.18	12.33	21.13	-41.98	-13.00	-28.98	V
LTE Band 4 / 1.4MHz / QPSK / RB Size 1 Offset 0/ The Worst Test Results for Middle							
Frequency(MHz)	S G.Lev (dBm)	Ant(dBi)	Loss	PMea (dBm)	Limit （dBm）	Margin (dBm)	Polarity
3464.60	-34.77	12.90	12.56	-34.43	-13.00	-21.43	H
5196.69	-34.37	13.10	16.32	-37.59	-13.00	-24.59	H
6930.15	-33.63	12.33	21.13	-42.43	-13.00	-29.43	H
3464.60	-34.74	12.90	12.56	-34.40	-13.00	-21.40	V
5196.69	-34.16	13.10	16.32	-37.38	-13.00	-24.38	V
6930.15	-32.24	12.33	21.13	-41.04	-13.00	-28.04	V
LTE Band 4 / 1.4MHz / QPSK / RB Size 1 Offset 0/ The Worst Test Results for Highest							
Frequency(MHz)	S G.Lev (dBm)	Ant(dBi)	Loss	PMea (dBm)	Limit （dBm）	Margin (dBm)	Polarity
3508.21	-34.04	12.90	12.56	-33.70	-13.00	-20.70	H
5262.53	-34.42	13.10	16.32	-37.64	-13.00	-24.64	H
7015.69	-33.23	12.33	21.13	-42.03	-13.00	-29.03	H
3508.21	-34.98	12.90	12.56	-34.64	-13.00	-21.64	V
5262.53	-35.23	13.10	16.32	-38.45	-13.00	-25.45	V
7015.69	-31.72	12.33	21.13	-40.52	-13.00	-27.52	V

LTE Band 4 / 3MHz / QPSK / RB Size 1 Offset 0/ The Worst Test Results for Lowest							
Frequency(MHz)	S G.Lev (dBm)	Ant(dBi)	Loss	PMea (dBm)	Limit （dBm）	Margin (dBm)	Polarity
3423.90	-34.00	12.90	12.56	-33.66	-13.00	-20.66	H
5135.92	-35.41	13.10	16.32	-38.63	-13.00	-25.63	H
6848.82	-33.33	12.33	21.13	-42.13	-13.00	-29.13	H
3423.90	-35.36	12.90	12.56	-35.02	-13.00	-22.02	V
5135.92	-34.65	13.10	16.32	-37.87	-13.00	-24.87	V
6848.82	-32.51	12.33	21.13	-41.31	-13.00	-28.31	V
LTE Band 4 / 3MHz / QPSK / RB Size 1 Offset 0/ The Worst Test Results for Middle							
Frequency(MHz)	S G.Lev (dBm)	Ant(dBi)	Loss	PMea (dBm)	Limit （dBm）	Margin (dBm)	Polarity
3464.59	-34.37	12.90	12.56	-34.03	-13.00	-21.03	H
5196.69	-35.12	13.10	16.32	-38.34	-13.00	-25.34	H
6929.86	-32.60	12.33	21.13	-41.40	-13.00	-28.40	H
3464.59	-35.03	12.90	12.56	-34.69	-13.00	-21.69	V
5196.69	-34.20	13.10	16.32	-37.42	-13.00	-24.42	V
6929.86	-33.07	12.33	21.13	-41.87	-13.00	-28.87	V
LTE Band 4 / 3MHz / QPSK / RB Size 1 Offset 0/ The Worst Test Results for Highest							
Frequency(MHz)	S G.Lev (dBm)	Ant(dBi)	Loss	PMea (dBm)	Limit （dBm）	Margin (dBm)	Polarity
3506.09	-34.28	12.90	12.56	-33.94	-13.00	-20.94	H
5262.03	-34.01	13.10	16.32	-37.23	-13.00	-24.23	H
7012.47	-33.53	12.33	21.13	-42.33	-13.00	-29.33	H
3506.09	-34.71	12.90	12.56	-34.37	-13.00	-21.37	V
5262.03	-34.18	13.10	16.32	-37.40	-13.00	-24.40	V
7012.47	-32.42	12.33	21.13	-41.22	-13.00	-28.22	V

LTE Band 4 / 5MHz / QPSK / RB Size 1 Offset 0/ The Worst Test Results for Lowest							
Frequency(MHz)	S G.Lev (dBm)	Ant(dBi)	Loss	PMea (dBm)	Limit （dBm）	Margin (dBm)	Polarity
3424.66	-34.43	12.90	12.56	-34.09	-13.00	-21.09	H
5137.22	-34.29	13.10	16.32	-37.51	-13.00	-24.51	H
6849.56	-33.03	12.33	21.13	-41.83	-13.00	-28.83	H
3424.66	-34.56	12.90	12.56	-34.22	-13.00	-21.22	V
5137.22	-34.75	13.10	16.32	-37.97	-13.00	-24.97	V
6849.56	-33.04	12.33	21.13	-41.84	-13.00	-28.84	V
LTE Band 4 / 5MHz / QPSK / RB Size 1 Offset 0/ The Worst Test Results for Middle							
Frequency(MHz)	S G.Lev (dBm)	Ant(dBi)	Loss	PMea (dBm)	Limit （dBm）	Margin (dBm)	Polarity
3464.58	-34.59	12.90	12.56	-34.25	-13.00	-21.25	H
5197.00	-34.96	13.10	16.32	-38.18	-13.00	-25.18	H
6929.87	-33.40	12.33	21.13	-42.20	-13.00	-29.20	H
3464.58	-35.29	12.90	12.56	-34.95	-13.00	-21.95	V
5197.00	-34.79	13.10	16.32	-38.01	-13.00	-25.01	V
6929.87	-31.74	12.33	21.13	-40.54	-13.00	-27.54	V
LTE Band 4 / 5MHz / QPSK / RB Size 1 Offset 0/ The Worst Test Results for Highest							
Frequency(MHz)	S G.Lev (dBm)	Ant(dBi)	Loss	PMea (dBm)	Limit （dBm）	Margin (dBm)	Polarity
3505.08	-33.63	12.90	12.56	-33.29	-13.00	-20.29	H
5257.04	-34.82	13.10	16.32	-38.04	-13.00	-25.04	H
7009.96	-32.19	12.33	21.13	-40.99	-13.00	-27.99	H
3505.08	-35.47	12.90	12.56	-35.13	-13.00	-22.13	V
5257.04	-35.25	13.10	16.32	-38.47	-13.00	-25.47	V
7009.96	-32.93	12.33	21.13	-41.73	-13.00	-28.73	V

LTE Band 4 / 10MHz / QPSK / RB Size 1 Offset 0/ The Worst Test Results for Lowest							
Frequency(MHz)	S G.Lev (dBm)	Ant(dBi)	Loss	PMea (dBm)	Limit （dBm）	Margin (dBm)	Polarity
3429.90	-33.58	12.90	12.56	-33.24	-13.00	-20.24	H
5145.39	-34.31	13.10	16.32	-37.53	-13.00	-24.53	H
6860.29	-33.28	12.33	21.13	-42.08	-13.00	-29.08	H
3429.90	-35.20	12.90	12.56	-34.86	-13.00	-21.86	V
5145.39	-35.06	13.10	16.32	-38.28	-13.00	-25.28	V
6860.29	-32.44	12.33	21.13	-41.24	-13.00	-28.24	V
LTE Band 4 / 10MHz / QPSK / RB Size 1 Offset 0/ The Worst Test Results for Middle							
Frequency(MHz)	S G.Lev (dBm)	Ant(dBi)	Loss	PMea (dBm)	Limit （dBm）	Margin (dBm)	Polarity
3464.36	-33.76	12.90	12.56	-33.42	-13.00	-20.42	H
5196.66	-34.71	13.10	16.32	-37.93	-13.00	-24.93	H
6929.70	-33.05	12.33	21.13	-41.85	-13.00	-28.85	H
3464.36	-34.95	12.90	12.56	-34.61	-13.00	-21.61	V
5196.66	-33.80	13.10	16.32	-37.02	-13.00	-24.02	V
6929.70	-33.14	12.33	21.13	-41.94	-13.00	-28.94	V
LTE Band 4 / 10MHz / QPSK / RB Size 1 Offset 0/ The Worst Test Results for Highest							
Frequency(MHz)	S G.Lev (dBm)	Ant(dBi)	Loss	PMea (dBm)	Limit （dBm）	Margin (dBm)	Polarity
3500.38	-34.30	12.90	12.56	-33.96	-13.00	-20.96	H
5250.35	-34.75	13.10	16.32	-37.97	-13.00	-24.97	H
6999.73	-32.35	12.33	21.13	-41.15	-13.00	-28.15	H
3500.38	-35.80	12.90	12.56	-35.46	-13.00	-22.46	V
5250.35	-34.92	13.10	16.32	-38.14	-13.00	-25.14	V
6999.73	-32.69	12.33	21.13	-41.49	-13.00	-28.49	V

LTE Band 4 / 15MHz / QPSK / RB Size 1 Offset 0/ The Worst Test Results for Lowest							
Frequency(MHz)	S G.Lev (dBm)	Ant(dBi)	Loss	PMea (dBm)	Limit （dBm）	Margin (dBm)	Polarity
3435.04	-34.68	12.90	12.56	-34.34	-13.00	-21.34	H
5152.29	-34.42	13.10	16.32	-37.64	-13.00	-24.64	H
6870.51	-33.60	12.33	21.13	-42.40	-13.00	-29.40	H
3435.04	-35.98	12.90	12.56	-35.64	-13.00	-22.64	V
5152.29	-34.56	13.10	16.32	-37.78	-13.00	-24.78	V
6870.51	-32.47	12.33	21.13	-41.27	-13.00	-28.27	V
LTE Band 4 / 15MHz / QPSK / RB Size 1 Offset 0/ The Worst Test Results for Middle							
Frequency(MHz)	S G.Lev (dBm)	Ant(dBi)	Loss	PMea (dBm)	Limit （dBm）	Margin (dBm)	Polarity
3465.03	-33.62	12.90	12.56	-33.28	-13.00	-20.28	H
5196.37	-34.26	13.10	16.32	-37.48	-13.00	-24.48	H
6930.11	-33.56	12.33	21.13	-42.36	-13.00	-29.36	H
3465.03	-34.66	12.90	12.56	-34.32	-13.00	-21.32	V
5196.37	-33.88	13.10	16.32	-37.10	-13.00	-24.10	V
6930.11	-31.98	12.33	21.13	-40.78	-13.00	-27.78	V
LTE Band 4 / 15MHz / QPSK / RB Size 1 Offset 0/ The Worst Test Results for Highest							
Frequency(MHz)	S G.Lev (dBm)	Ant(dBi)	Loss	PMea (dBm)	Limit （dBm）	Margin (dBm)	Polarity
3495.49	-33.76	12.90	12.56	-33.42	-13.00	-20.42	H
5242.24	-34.68	13.10	16.32	-37.90	-13.00	-24.90	H
6990.28	-33.09	12.33	21.13	-41.89	-13.00	-28.89	H
3495.49	-35.68	12.90	12.56	-35.34	-13.00	-22.34	V
5242.24	-34.53	13.10	16.32	-37.75	-13.00	-24.75	V
6990.28	-32.26	12.33	21.13	-41.06	-13.00	-28.06	V

LTE Band 4 / 20MHz / QPSK / RB Size 1 Offset 0/ The Worst Test Results for Lowest							
Frequency(MHz)	S G.Lev (dBm)	Ant(dBi)	Loss	PMea (dBm)	Limit （dBm）	Margin (dBm)	Polarity
3440.11	-33.65	12.90	12.56	-33.31	-13.00	-20.31	H
5160.25	-34.52	13.10	16.32	-37.74	-13.00	-24.74	H
6880.82	-32.79	12.33	21.13	-41.59	-13.00	-28.59	H
3440.11	-35.71	12.90	12.56	-35.37	-13.00	-22.37	V
5160.25	-33.89	13.10	16.32	-37.11	-13.00	-24.11	V
6880.82	-33.08	12.33	21.13	-41.88	-13.00	-28.88	V
LTE Band 4 / 20MHz / QPSK / RB Size 1 Offset 0/ The Worst Test Results for Middle							
Frequency(MHz)	S G.Lev (dBm)	Ant(dBi)	Loss	PMea (dBm)	Limit （dBm）	Margin (dBm)	Polarity
3465.05	-33.60	12.90	12.56	-33.26	-13.00	-20.26	H
5196.36	-34.51	13.10	16.32	-37.73	-13.00	-24.73	H
6929.53	-32.80	12.33	21.13	-41.60	-13.00	-28.60	H
3465.05	-35.58	12.90	12.56	-35.24	-13.00	-22.24	V
5196.36	-34.75	13.10	16.32	-37.97	-13.00	-24.97	V
6929.53	-32.95	12.33	21.13	-41.75	-13.00	-28.75	V
LTE Band 4 / 20MHz / QPSK / RB Size 1 Offset 0/ The Worst Test Results for Highest							
Frequency(MHz)	S G.Lev (dBm)	Ant(dBi)	Loss	PMea (dBm)	Limit （dBm）	Margin (dBm)	Polarity
3490.59	-34.30	12.90	12.56	-33.96	-13.00	-20.96	H
5234.94	-34.80	13.10	16.32	-38.02	-13.00	-25.02	H
6979.57	-32.72	12.33	21.13	-41.52	-13.00	-28.52	H
3490.59	-35.85	12.90	12.56	-35.51	-13.00	-22.51	V
5234.94	-34.32	13.10	16.32	-37.54	-13.00	-24.54	V
6979.57	-32.61	12.33	21.13	-41.41	-13.00	-28.41	V

LTE Band 5 / 1.4MHz / QPSK / RB Size 1 Offset 0/ The Worst Test Results for Lowest							
Frequency(MHz)	S G.Lev (dBm)	Ant(dBi)	Loss	PMea (dBm)	Limit （dBm）	Margin (dBm)	Polarity
1648.48	-34.28	9.56	9.72	-34.44	-13.00	-21.44	H
2473.63	-34.73	10.50	10.86	-35.09	-13.00	-22.09	H
3298.49	-32.36	12.78	11.57	-31.15	-13.00	-18.15	H
1648.48	-35.63	9.56	9.72	-35.79	-13.00	-22.79	V
2473.63	-33.89	10.50	10.86	-34.25	-13.00	-21.25	V
3298.49	-32.80	12.78	11.57	-31.59	-13.00	-18.59	V
LTE Band 5 / 1.4MHz / QPSK / RB Size 1 Offset 0/ The Worst Test Results for Middle							
Frequency(MHz)	S G.Lev (dBm)	Ant(dBi)	Loss	PMea (dBm)	Limit （dBm）	Margin (dBm)	Polarity
1672.45	-33.47	9.56	9.72	-33.63	-13.00	-20.63	H
2509.39	-34.31	10.50	10.86	-34.67	-13.00	-21.67	H
3345.32	-32.30	12.78	11.57	-31.09	-13.00	-18.09	H
1672.45	-34.88	9.56	9.72	-35.04	-13.00	-22.04	V
2509.39	-34.39	10.50	10.86	-34.75	-13.00	-21.75	V
3345.32	-32.55	12.78	11.57	-31.34	-13.00	-18.34	V
LTE Band 5 / 1.4MHz / QPSK / RB Size 1 Offset 0/ The Worst Test Results for Highest							
Frequency(MHz)	S G.Lev (dBm)	Ant(dBi)	Loss	PMea (dBm)	Limit （dBm）	Margin (dBm)	Polarity
1696.14	-34.02	9.56	9.72	-34.18	-13.00	-21.18	H
2544.31	-35.16	10.50	10.86	-35.52	-13.00	-22.52	H
3393.05	-32.64	12.78	11.57	-31.43	-13.00	-18.43	H
1696.14	-35.01	9.56	9.72	-35.17	-13.00	-22.17	V
2544.31	-34.78	10.50	10.86	-35.14	-13.00	-22.14	V
3393.05	-32.08	12.78	11.57	-30.87	-13.00	-17.87	V

LTE Band 5 / 3MHz / QPSK / RB Size 1 Offset 0/ The Worst Test Results for Lowest							
Frequency(MHz)	S G.Lev (dBm)	Ant(dBi)	Loss	PMea (dBm)	Limit （dBm）	Margin (dBm)	Polarity
1650.51	-33.92	9.56	9.72	-34.08	-13.00	-21.08	H
2475.73	-34.36	10.50	10.86	-34.72	-13.00	-21.72	H
3301.71	-33.12	12.78	11.57	-31.91	-13.00	-18.91	H
1650.51	-34.66	9.56	9.72	-34.82	-13.00	-21.82	V
2475.73	-34.22	10.50	10.86	-34.58	-13.00	-21.58	V
3301.71	-32.82	12.78	11.57	-31.61	-13.00	-18.61	V
LTE Band 5 / 3MHz / QPSK / RB Size 1 Offset 0/ The Worst Test Results for Middle							
Frequency(MHz)	S G.Lev (dBm)	Ant(dBi)	Loss	PMea (dBm)	Limit （dBm）	Margin (dBm)	Polarity
1672.23	-33.49	9.56	9.72	-33.65	-13.00	-20.65	H
2508.98	-34.65	10.50	10.86	-35.01	-13.00	-22.01	H
3345.70	-32.54	12.78	11.57	-31.33	-13.00	-18.33	H
1672.23	-35.54	9.56	9.72	-35.70	-13.00	-22.70	V
2508.98	-34.63	10.50	10.86	-34.99	-13.00	-21.99	V
3345.70	-31.74	12.78	11.57	-30.53	-13.00	-17.53	V
LTE Band 5 / 3MHz / QPSK / RB Size 1 Offset 0/ The Worst Test Results for Highest							
Frequency(MHz)	S G.Lev (dBm)	Ant(dBi)	Loss	PMea (dBm)	Limit （dBm）	Margin (dBm)	Polarity
1694.71	-34.40	9.56	9.72	-34.56	-13.00	-21.56	H
2541.73	-35.14	10.50	10.86	-35.50	-13.00	-22.50	H
3389.50	-33.15	12.78	11.57	-31.94	-13.00	-18.94	H
1694.71	-35.51	9.56	9.72	-35.67	-13.00	-22.67	V
2541.73	-34.03	10.50	10.86	-34.39	-13.00	-21.39	V
3389.50	-31.92	12.78	11.57	-30.71	-13.00	-17.71	V

LTE Band 5 / 5MHz / QPSK / RB Size 1 Offset 0/ The Worst Test Results for Lowest							
Frequency(MHz)	S G.Lev (dBm)	Ant(dBi)	Loss	PMea (dBm)	Limit （dBm）	Margin (dBm)	Polarity
1652.71	-33.69	9.56	9.72	-33.85	-13.00	-20.85	H
2478.61	-35.36	10.50	10.86	-35.72	-13.00	-22.72	H
3305.38	-32.90	12.78	11.57	-31.69	-13.00	-18.69	H
1652.71	-34.70	9.56	9.72	-34.86	-13.00	-21.86	V
2478.61	-34.49	10.50	10.86	-34.85	-13.00	-21.85	V
3305.38	-32.49	12.78	11.57	-31.28	-13.00	-18.28	V
LTE Band 5 / 5MHz / QPSK / RB Size 1 Offset 0/ The Worst Test Results for Middle							
Frequency(MHz)	S G.Lev (dBm)	Ant(dBi)	Loss	PMea (dBm)	Limit （dBm）	Margin (dBm)	Polarity
1672.42	-33.62	9.56	9.72	-33.78	-13.00	-20.78	H
2508.99	-35.11	10.50	10.86	-35.47	-13.00	-22.47	H
3345.53	-32.48	12.78	11.57	-31.27	-13.00	-18.27	H
1672.42	-34.97	9.56	9.72	-35.13	-13.00	-22.13	V
2508.99	-34.46	10.50	10.86	-34.82	-13.00	-21.82	V
3345.53	-32.07	12.78	11.57	-30.86	-13.00	-17.86	V
LTE Band 5 / 5MHz / QPSK / RB Size 1 Offset 0/ The Worst Test Results for Highest							
Frequency(MHz)	S G.Lev (dBm)	Ant(dBi)	Loss	PMea (dBm)	Limit （dBm）	Margin (dBm)	Polarity
1692.54	-34.07	9.56	9.72	-34.23	-13.00	-21.23	H
2538.75	-34.29	10.50	10.86	-34.65	-13.00	-21.65	H
3385.90	-33.17	12.78	11.57	-31.96	-13.00	-18.96	H
1692.54	-34.76	9.56	9.72	-34.92	-13.00	-21.92	V
2538.75	-34.75	10.50	10.86	-35.11	-13.00	-22.11	V
3385.90	-33.07	12.78	11.57	-31.86	-13.00	-18.86	V

LTE Band 5 / 10MHz / QPSK / RB Size 1 Offset 0/ The Worst Test Results for Lowest							
Frequency(MHz)	S G.Lev (dBm)	Ant(dBi)	Loss	PMea (dBm)	Limit （dBm）	Margin (dBm)	Polarity
1657.89	-34.37	9.56	9.72	-34.53	-13.00	-21.53	H
2486.51	-35.31	10.50	10.86	-35.67	-13.00	-22.67	H
3315.42	-32.65	12.78	11.57	-31.44	-13.00	-18.44	H
1657.89	-35.56	9.56	9.72	-35.72	-13.00	-22.72	V
2486.51	-35.07	10.50	10.86	-35.43	-13.00	-22.43	V
3315.42	-33.16	12.78	11.57	-31.95	-13.00	-18.95	V
LTE Band 5 / 10MHz / QPSK / RB Size 1 Offset 0/ The Worst Test Results for Middle							
Frequency(MHz)	S G.Lev (dBm)	Ant(dBi)	Loss	PMea (dBm)	Limit （dBm）	Margin (dBm)	Polarity
1672.57	-33.64	9.56	9.72	-33.80	-13.00	-20.80	H
2508.72	-34.92	10.50	10.86	-35.28	-13.00	-22.28	H
3345.29	-32.88	12.78	11.57	-31.67	-13.00	-18.67	H
1672.57	-35.26	9.56	9.72	-35.42	-13.00	-22.42	V
2508.72	-34.96	10.50	10.86	-35.32	-13.00	-22.32	V
3345.29	-32.71	12.78	11.57	-31.50	-13.00	-18.50	V
LTE Band 5 / 10MHz / QPSK / RB Size 1 Offset 0/ The Worst Test Results for Highest							
Frequency(MHz)	S G.Lev (dBm)	Ant(dBi)	Loss	PMea (dBm)	Limit （dBm）	Margin (dBm)	Polarity
1687.50	-34.43	9.56	9.72	-34.59	-13.00	-21.59	H
2531.30	-35.31	10.50	10.86	-35.67	-13.00	-22.67	H
3375.73	-33.59	12.78	11.57	-32.38	-13.00	-19.38	H
1687.50	-35.01	9.56	9.72	-35.17	-13.00	-22.17	V
2531.30	-34.11	10.50	10.86	-34.47	-13.00	-21.47	V
3375.73	-32.30	12.78	11.57	-31.09	-13.00	-18.09	V

LTE Band 7 / 5MHz / QPSK / RB Size 1 Offset 0/ The Worst Test Results for Lowest							
Frequency(MHz)	S G.Lev (dBm)	Ant(dBi)	Loss	PMea (dBm)	Limit （dBm）	Margin (dBm)	Polarity
5004.94	-34.83	12.66	15.86	-38.03	-25.00	-13.03	H
7507.86	-34.47	11.46	19.28	-42.29	-25.00	-17.29	H
10010.21	-33.59	12.79	23.19	-43.99	-25.00	-18.99	H
5004.94	-35.49	12.66	15.86	-38.69	-25.00	-13.69	V
7507.86	-34.04	11.46	19.28	-41.86	-25.00	-16.86	V
10010.21	-33.17	12.79	23.19	-43.57	-25.00	-18.57	V
LTE Band 7 / 5MHz / QPSK / RB Size 1 Offset 0/ The Worst Test Results for Middle							
Frequency(MHz)	S G.Lev (dBm)	Ant(dBi)	Loss	PMea (dBm)	Limit （dBm）	Margin (dBm)	Polarity
5070.06	-33.49	12.72	15.86	-36.63	-25.00	-11.63	H
7604.75	-35.36	11.46	19.28	-43.18	-25.00	-18.18	H
10139.90	-32.99	12.09	23.19	-44.09	-25.00	-19.09	H
5070.06	-35.11	12.72	15.86	-38.25	-25.00	-13.25	V
7604.75	-33.98	11.46	19.28	-41.80	-25.00	-16.80	V
10139.90	-33.05	12.09	23.19	-44.15	-25.00	-19.15	V
LTE Band 7 / 5MHz / QPSK / RB Size 1 Offset 0/ The Worst Test Results for Highest							
Frequency(MHz)	S G.Lev (dBm)	Ant(dBi)	Loss	PMea (dBm)	Limit （dBm）	Margin (dBm)	Polarity
5133.64	-34.40	12.76	15.86	-37.50	-25.00	-12.50	H
7701.43	-34.74	11.45	19.28	-42.57	-25.00	-17.57	H
10268.15	-32.80	12.28	23.19	-43.71	-25.00	-18.71	H
5133.64	-36.01	12.76	15.86	-39.11	-25.00	-14.11	V
7701.43	-34.34	11.45	19.28	-42.17	-25.00	-17.17	V
10268.15	-32.66	12.28	23.19	-43.57	-25.00	-18.57	V

LTE Band 7 / 10MHz / QPSK / RB Size 1 Offset 0/ The Worst Test Results for Lowest							
Frequency(MHz)	S G.Lev (dBm)	Ant(dBi)	Loss	PMea (dBm)	Limit （dBm）	Margin (dBm)	Polarity
5010.07	-34.15	12.66	15.86	-37.35	-25.00	-12.35	H
7515.42	-34.57	11.46	19.28	-42.39	-25.00	-17.39	H
10020.43	-32.50	12.79	23.19	-42.90	-25.00	-17.90	H
5010.07	-35.36	12.66	15.86	-38.56	-25.00	-13.56	V
7515.42	-34.69	11.46	19.28	-42.51	-25.00	-17.51	V
10020.43	-33.21	12.79	23.19	-43.61	-25.00	-18.61	V
LTE Band 7 / 10MHz / QPSK / RB Size 1 Offset 0/ The Worst Test Results for Middle							
Frequency(MHz)	S G.Lev (dBm)	Ant(dBi)	Loss	PMea (dBm)	Limit （dBm）	Margin (dBm)	Polarity
5069.60	-34.34	12.72	15.86	-37.48	-25.00	-12.48	H
7604.72	-35.37	11.46	19.28	-43.19	-25.00	-18.19	H
10139.91	-33.18	12.09	23.19	-44.28	-25.00	-19.28	H
5069.60	-35.76	12.72	15.86	-38.90	-25.00	-13.90	V
7604.72	-33.79	11.46	19.28	-41.61	-25.00	-16.61	V
10139.91	-31.84	12.09	23.19	-42.94	-25.00	-17.94	V
LTE Band 7 / 10MHz / QPSK / RB Size 1 Offset 0/ The Worst Test Results for Highest							
Frequency(MHz)	S G.Lev (dBm)	Ant(dBi)	Loss	PMea (dBm)	Limit （dBm）	Margin (dBm)	Polarity
5128.96	-33.47	12.76	15.86	-36.57	-25.00	-11.57	H
7693.96	-34.97	11.45	19.28	-42.80	-25.00	-17.80	H
10258.78	-33.28	12.28	23.19	-44.19	-25.00	-19.19	H
5128.96	-35.64	12.76	15.86	-38.74	-25.00	-13.74	V
7693.96	-34.83	11.45	19.28	-42.66	-25.00	-17.66	V
10258.78	-32.98	12.28	23.19	-43.89	-25.00	-18.89	V

LTE Band 7 / 15MHz / QPSK / RB Size 1 Offset 0/ The Worst Test Results for Lowest							
Frequency(MHz)	S G.Lev (dBm)	Ant(dBi)	Loss	PMea (dBm)	Limit （dBm）	Margin (dBm)	Polarity
5015.72	-33.96	12.66	15.86	-37.16	-25.00	-12.16	H
7524.19	-35.30	11.46	19.28	-43.12	-25.00	-18.12	H
10031.95	-32.49	12.79	23.19	-42.89	-25.00	-17.89	H
5015.72	-35.12	12.66	15.86	-38.32	-25.00	-13.32	V
7524.19	-35.07	11.46	19.28	-42.89	-25.00	-17.89	V
10031.95	-31.88	12.79	23.19	-42.28	-25.00	-17.28	V
LTE Band 7 / 15MHz / QPSK / RB Size 1 Offset 0/ The Worst Test Results for Middle							
Frequency(MHz)	S G.Lev (dBm)	Ant(dBi)	Loss	PMea (dBm)	Limit （dBm）	Margin (dBm)	Polarity
5069.87	-34.65	12.72	15.86	-37.79	-25.00	-12.79	H
7605.15	-34.18	11.46	19.28	-42.00	-25.00	-17.00	H
10139.59	-32.92	12.09	23.19	-44.02	-25.00	-19.02	H
5069.87	-35.64	12.72	15.86	-38.78	-25.00	-13.78	V
7605.15	-34.31	11.46	19.28	-42.13	-25.00	-17.13	V
10139.59	-32.75	12.09	23.19	-43.85	-25.00	-18.85	V
LTE Band 7 / 15MHz / QPSK / RB Size 1 Offset 0/ The Worst Test Results for Highest							
Frequency(MHz)	S G.Lev (dBm)	Ant(dBi)	Loss	PMea (dBm)	Limit （dBm）	Margin (dBm)	Polarity
5123.38	-34.42	12.76	15.86	-37.52	-25.00	-12.52	H
7523.66	-34.89	11.45	19.28	-42.72	-25.00	-17.72	H
10032.23	-32.95	12.28	23.19	-43.86	-25.00	-18.86	H
5123.38	-35.14	12.76	15.86	-38.24	-25.00	-13.24	V
7523.66	-35.02	11.45	19.28	-42.85	-25.00	-17.85	V
10032.23	-32.64	12.28	23.19	-43.55	-25.00	-18.55	V

LTE Band 7 / 20MHz / QPSK / RB Size 1 Offset 0/ The Worst Test Results for Lowest							
Frequency(MHz)	S G.Lev (dBm)	Ant(dBi)	Loss	PMea (dBm)	Limit （dBm）	Margin (dBm)	Polarity
5020.97	-33.97	12.66	15.86	-37.17	-25.00	-12.17	H
7531.20	-34.80	11.46	19.28	-42.62	-25.00	-17.62	H
10258.62	-33.19	12.79	23.19	-43.59	-25.00	-18.59	H
5020.97	-34.81	12.66	15.86	-38.01	-25.00	-13.01	V
7531.20	-35.24	11.46	19.28	-43.06	-25.00	-18.06	V
10258.62	-31.83	12.79	23.19	-42.23	-25.00	-17.23	V
LTE Band 7 / 20MHz / QPSK / RB Size 1 Offset 0/ The Worst Test Results for Middle							
Frequency(MHz)	S G.Lev (dBm)	Ant(dBi)	Loss	PMea (dBm)	Limit （dBm）	Margin (dBm)	Polarity
5069.92	-34.78	12.72	15.86	-37.92	-25.00	-12.92	H
7604.97	-35.11	11.46	19.28	-42.93	-25.00	-17.93	H
10139.79	-32.91	12.09	23.19	-44.01	-25.00	-19.01	H
5069.92	-34.95	12.72	15.86	-38.09	-25.00	-13.09	V
7604.97	-34.96	11.46	19.28	-42.78	-25.00	-17.78	V
10139.79	-33.11	12.09	23.19	-44.21	-25.00	-19.21	V
LTE Band 7 / 20MHz / QPSK / RB Size 1 Offset 0/ The Worst Test Results for Highest							
Frequency(MHz)	S G.Lev (dBm)	Ant(dBi)	Loss	PMea (dBm)	Limit （dBm）	Margin (dBm)	Polarity
5119.05	-34.86	12.76	15.86	-37.96	-25.00	-12.96	H
7678.43	-34.14	11.45	19.28	-41.97	-25.00	-16.97	H
10237.89	-32.65	12.28	23.19	-43.56	-25.00	-18.56	H
5119.05	-35.85	12.76	15.86	-38.95	-25.00	-13.95	V
7678.43	-34.98	11.45	19.28	-42.81	-25.00	-17.81	V
10237.89	-32.16	12.28	23.19	-43.07	-25.00	-18.07	V

LTE Band 12 / 1.4MHz / QPSK / RB Size 1 Offset 0/ The Worst Test Results for Lowest							
Frequency(MHz)	S G.Lev (dBm)	Ant(dBi)	Loss	PMea (dBm)	Limit （dBm）	Margin (dBm)	Polarity
1398.90	-34.35	8.17	9.34	-35.52	-13.00	-22.52	H
2098.97	-34.59	9.53	10.42	-35.48	-13.00	-22.48	H
2798.30	-32.47	11.27	11.12	-32.32	-13.00	-19.32	H
1398.90	-35.52	8.17	9.34	-36.69	-13.00	-23.69	V
2098.97	-34.42	9.53	10.42	-35.31	-13.00	-22.31	V
2798.30	-32.75	11.27	11.12	-32.60	-13.00	-19.60	V
LTE Band 12 / 1.4MHz / QPSK / RB Size 1 Offset 0/ The Worst Test Results for Middle							
Frequency(MHz)	S G.Lev (dBm)	Ant(dBi)	Loss	PMea (dBm)	Limit （dBm）	Margin (dBm)	Polarity
1414.71	-33.48	8.17	9.34	-34.65	-13.00	-21.65	H
2122.19	-34.31	9.53	10.42	-35.20	-13.00	-22.20	H
2829.77	-32.82	11.27	11.12	-32.67	-13.00	-19.67	H
1414.71	-35.58	8.17	9.34	-36.75	-13.00	-23.75	V
2122.19	-34.49	9.53	10.42	-35.38	-13.00	-22.38	V
2829.77	-33.10	11.27	11.12	-32.95	-13.00	-19.95	V
LTE Band 12 / 1.4MHz / QPSK / RB Size 1 Offset 0/ The Worst Test Results for Highest							
Frequency(MHz)	S G.Lev (dBm)	Ant(dBi)	Loss	PMea (dBm)	Limit （dBm）	Margin (dBm)	Polarity
1430.59	-34.84	8.17	9.34	-36.01	-13.00	-23.01	H
2145.76	-35.04	9.53	10.42	-35.93	-13.00	-22.93	H
2860.94	-32.38	11.27	11.12	-32.23	-13.00	-19.23	H
1430.59	-35.70	8.17	9.34	-36.87	-13.00	-23.87	V
2145.76	-34.70	9.53	10.42	-35.59	-13.00	-22.59	V
2860.94	-32.30	11.27	11.12	-32.15	-13.00	-19.15	V

LTE Band 12 / 3MHz / QPSK / RB Size 1 Offset 0/ The Worst Test Results for Lowest							
Frequency(MHz)	S G.Lev (dBm)	Ant(dBi)	Loss	PMea (dBm)	Limit （dBm）	Margin (dBm)	Polarity
1400.81	-34.05	8.17	9.34	-35.22	-13.00	-22.22	H
2101.42	-34.16	9.53	10.42	-35.05	-13.00	-22.05	H
2801.89	-32.54	11.27	11.12	-32.39	-13.00	-19.39	H
1400.81	-34.52	8.17	9.34	-35.69	-13.00	-22.69	V
2101.42	-34.51	9.53	10.42	-35.40	-13.00	-22.40	V
2801.89	-32.18	11.27	11.12	-32.03	-13.00	-19.03	V
LTE Band 12 / 3MHz / QPSK / RB Size 1 Offset 0/ The Worst Test Results for Middle							
Frequency(MHz)	S G.Lev (dBm)	Ant(dBi)	Loss	PMea (dBm)	Limit （dBm）	Margin (dBm)	Polarity
1414.64	-34.76	8.17	9.34	-35.93	-13.00	-22.93	H
2122.45	-35.20	9.53	10.42	-36.09	-13.00	-23.09	H
2829.77	-32.66	11.27	11.12	-32.51	-13.00	-19.51	H
1414.64	-34.97	8.17	9.34	-36.14	-13.00	-23.14	V
2122.45	-34.35	9.53	10.42	-35.24	-13.00	-22.24	V
2829.77	-31.91	11.27	11.12	-31.76	-13.00	-18.76	V
LTE Band 12 / 3MHz / QPSK / RB Size 1 Offset 0/ The Worst Test Results for Highest							
Frequency(MHz)	S G.Lev (dBm)	Ant(dBi)	Loss	PMea (dBm)	Limit （dBm）	Margin (dBm)	Polarity
1428.59	-34.65	8.17	9.34	-35.82	-13.00	-22.82	H
2143.46	-34.71	9.53	10.42	-35.60	-13.00	-22.60	H
2857.73	-33.47	11.27	11.12	-33.32	-13.00	-20.32	H
1428.59	-34.70	8.17	9.34	-35.87	-13.00	-22.87	V
2143.46	-33.96	9.53	10.42	-34.85	-13.00	-21.85	V
2857.73	-31.81	11.27	11.12	-31.66	-13.00	-18.66	V

LTE Band 12 / 5MHz / QPSK / RB Size 1 Offset 0/ The Worst Test Results for Lowest							
Frequency(MHz)	S G.Lev (dBm)	Ant(dBi)	Loss	PMea (dBm)	Limit （dBm）	Margin (dBm)	Polarity
1402.98	-33.98	8.17	9.34	-35.15	-13.00	-22.15	H
2104.46	-34.32	9.53	10.42	-35.21	-13.00	-22.21	H
2805.64	-32.46	11.27	11.12	-32.31	-13.00	-19.31	H
1402.98	-35.03	8.17	9.34	-36.20	-13.00	-23.20	V
2104.46	-33.75	9.53	10.42	-34.64	-13.00	-21.64	V
2805.64	-32.91	11.27	11.12	-32.76	-13.00	-19.76	V
LTE Band 12 / 5MHz / QPSK / RB Size 1 Offset 0/ The Worst Test Results for Middle							
Frequency(MHz)	S G.Lev (dBm)	Ant(dBi)	Loss	PMea (dBm)	Limit （dBm）	Margin (dBm)	Polarity
1414.55	-34.33	8.17	9.34	-35.50	-13.00	-22.50	H
2122.21	-35.45	9.53	10.42	-36.34	-13.00	-23.34	H
2829.89	-32.29	11.27	11.12	-32.14	-13.00	-19.14	H
1414.55	-35.53	8.17	9.34	-36.70	-13.00	-23.70	V
2122.21	-34.21	9.53	10.42	-35.10	-13.00	-22.10	V
2829.89	-32.39	11.27	11.12	-32.24	-13.00	-19.24	V
LTE Band 12 / 5MHz / QPSK / RB Size 1 Offset 0/ The Worst Test Results for Highest							
Frequency(MHz)	S G.Lev (dBm)	Ant(dBi)	Loss	PMea (dBm)	Limit （dBm）	Margin (dBm)	Polarity
1426.56	-34.82	8.17	9.34	-35.99	-13.00	-22.99	H
2140.39	-34.22	9.53	10.42	-35.11	-13.00	-22.11	H
2853.96	-32.36	11.27	11.12	-32.21	-13.00	-19.21	H
1426.56	-34.73	8.17	9.34	-35.90	-13.00	-22.90	V
2140.39	-34.15	9.53	10.42	-35.04	-13.00	-22.04	V
2853.96	-32.10	11.27	11.12	-31.95	-13.00	-18.95	V

LTE Band 12 / 10MHz / QPSK / RB Size 1 Offset 0/ The Worst Test Results for Lowest							
Frequency(MHz)	S G.Lev (dBm)	Ant(dBi)	Loss	PMea (dBm)	Limit （dBm）	Margin (dBm)	Polarity
1407.61	-34.59	8.17	9.34	-35.76	-13.00	-22.76	H
2111.68	-34.43	9.53	10.42	-35.32	-13.00	-22.32	H
2815.96	-32.21	11.27	11.12	-32.06	-13.00	-19.06	H
1407.61	-35.52	8.17	9.34	-36.69	-13.00	-23.69	V
2111.68	-34.74	9.53	10.42	-35.63	-13.00	-22.63	V
2815.96	-32.84	11.27	11.12	-32.69	-13.00	-19.69	V
LTE Band 12 / 10MHz / QPSK / RB Size 1 Offset 0/ The Worst Test Results for Middle							
Frequency(MHz)	S G.Lev (dBm)	Ant(dBi)	Loss	PMea (dBm)	Limit （dBm）	Margin (dBm)	Polarity
1414.79	-34.75	8.17	9.34	-35.92	-13.00	-22.92	H
2122.00	-34.89	9.53	10.42	-35.78	-13.00	-22.78	H
2829.87	-33.21	11.27	11.12	-33.06	-13.00	-20.06	H
1414.79	-35.18	8.17	9.34	-36.35	-13.00	-23.35	V
2122.00	-35.06	9.53	10.42	-35.95	-13.00	-22.95	V
2829.87	-32.42	11.27	11.12	-32.27	-13.00	-19.27	V
LTE Band 12 / 10MHz / QPSK / RB Size 1 Offset 0/ The Worst Test Results for Highest							
Frequency(MHz)	S G.Lev (dBm)	Ant(dBi)	Loss	PMea (dBm)	Limit （dBm）	Margin (dBm)	Polarity
1421.96	-33.64	8.17	9.34	-34.81	-13.00	-21.81	H
2132.84	-35.07	9.53	10.42	-35.96	-13.00	-22.96	H
2843.90	-32.51	11.27	11.12	-32.36	-13.00	-19.36	H
1421.96	-35.85	8.17	9.34	-37.02	-13.00	-24.02	V
2132.84	-35.07	9.53	10.42	-35.96	-13.00	-22.96	V
2843.90	-32.08	11.27	11.12	-31.93	-13.00	-18.93	V

LTE Band 13 / 5MHz / QPSK / RB Size 1 Offset 0/ The Worst Test Results for Lowest							
Frequency(MHz)	S G.Lev (dBm)	Ant(dBi)	Loss	PMea (dBm)	Limit （dBm）	Margin (dBm)	Polarity
1559.27	-47.88	9.56	9.72	-48.04	-40.00	-8.04	H
2338.53	-47.20	10.50	10.86	-47.56	-13.00	-34.56	H
3117.96	-46.13	12.78	11.57	-44.92	-13.00	-31.92	H
1559.27	-48.30	9.56	9.72	-48.46	-40.00	-8.46	V
2338.53	-46.92	10.50	10.86	-47.28	-13.00	-34.28	V
3117.96	-46.14	12.78	11.57	-44.93	-13.00	-31.93	V
LTE Band 13 / 5MHz / QPSK / RB Size 1 Offset 0/ The Worst Test Results for Middle							
Frequency(MHz)	S G.Lev (dBm)	Ant(dBi)	Loss	PMea (dBm)	Limit （dBm）	Margin (dBm)	Polarity
1564.02	-47.76	9.56	9.72	-47.92	-40.00	-7.92	H
2345.65	-46.38	10.50	10.86	-46.74	-13.00	-33.74	H
3127.83	-45.25	12.78	11.57	-44.04	-13.00	-31.04	H
1564.02	-48.80	9.56	9.72	-48.96	-40.00	-8.96	V
2345.65	-46.84	10.50	10.86	-47.20	-13.00	-34.20	V
3127.83	-45.94	12.78	11.57	-44.73	-13.00	-31.73	V
LTE Band 13 / 5MHz / QPSK / RB Size 1 Offset 0/ The Worst Test Results for Highest							
Frequency(MHz)	S G.Lev (dBm)	Ant(dBi)	Loss	PMea (dBm)	Limit （dBm）	Margin (dBm)	Polarity
1568.72	-48.37	9.56	9.72	-48.53	-40.00	-8.53	H
2353.50	-47.10	10.50	10.86	-47.46	-13.00	-34.46	H
3138.25	-46.18	12.78	11.57	-44.97	-13.00	-31.97	H
1568.72	-48.24	9.56	9.72	-48.40	-40.00	-8.40	V
2353.50	-46.35	10.50	10.86	-46.71	-13.00	-33.71	V
3138.25	-45.55	12.78	11.57	-44.34	-13.00	-31.34	V

LTE Band 13 / 10MHz / QPSK / RB Size 1 Offset 0/ The Worst Test Results for Middle							
Frequency(MHz)	S G.Lev (dBm)	Ant(dBi)	Loss	PMea (dBm)	Limit （dBm）	Margin (dBm)	Polarity
1563.82	-48.01	9.56	9.72	-48.17	-40.00	-8.17	H
2346.21	-47.31	10.50	10.86	-47.67	-13.00	-34.67	H
3128.15	-45.44	12.78	11.57	-44.23	-13.00	-31.23	H
1563.82	-47.89	9.56	9.72	-48.05	-40.00	-8.05	V
2346.21	-46.41	10.50	10.86	-46.77	-13.00	-33.77	V
3128.15	-46.40	12.78	11.57	-45.19	-13.00	-32.19	V

LTE Band 17 / 5MHz / QPSK / RB Size 1 Offset 0/ The Worst Test Results for Lowest							
Frequency(MHz)	S G.Lev (dBm)	Ant(dBi)	Loss	PMea (dBm)	Limit （dBm）	Margin (dBm)	Polarity
1413.41	-33.49	8.17	9.34	-34.66	-13.00	-21.66	H
2120.49	-34.76	9.53	10.42	-35.65	-13.00	-22.65	H
2826.53	-33.49	11.27	11.12	-33.34	-13.00	-20.34	H
1413.41	-34.95	8.17	9.34	-36.12	-13.00	-23.12	V
2120.49	-33.91	9.53	10.42	-34.80	-13.00	-21.80	V
2826.53	-33.00	11.27	11.12	-32.85	-13.00	-19.85	V
LTE Band 17 / 5MHz / QPSK / RB Size 1 Offset 0/ The Worst Test Results for Middle							
Frequency(MHz)	S G.Lev (dBm)	Ant(dBi)	Loss	PMea (dBm)	Limit （dBm）	Margin (dBm)	Polarity
1420.09	-34.81	8.17	9.34	-35.98	-13.00	-22.98	H
2129.90	-34.30	9.53	10.42	-35.19	-13.00	-22.19	H
2840.15	-33.03	11.27	11.12	-32.88	-13.00	-19.88	H
1420.09	-35.84	8.17	9.34	-37.01	-13.00	-24.01	V
2129.90	-33.97	9.53	10.42	-34.86	-13.00	-21.86	V
2840.15	-32.87	11.27	11.12	-32.72	-13.00	-19.72	V
LTE Band 17 / 5MHz / QPSK / RB Size 1 Offset 0/ The Worst Test Results for Highest							
Frequency(MHz)	S G.Lev (dBm)	Ant(dBi)	Loss	PMea (dBm)	Limit （dBm）	Margin (dBm)	Polarity
1426.29	-34.74	8.17	9.34	-35.91	-13.00	-22.91	H
2139.35	-34.27	9.53	10.42	-35.16	-13.00	-22.16	H
2852.35	-32.92	11.27	11.12	-32.77	-13.00	-19.77	H
1426.29	-35.18	8.17	9.34	-36.35	-13.00	-23.35	V
2139.35	-35.14	9.53	10.42	-36.03	-13.00	-23.03	V
2852.35	-32.18	11.27	11.12	-32.03	-13.00	-19.03	V

LTE Band 17 / 10MHz / QPSK / RB Size 1 Offset 0/ The Worst Test Results for Lowest							
Frequency(MHz)	S G.Lev (dBm)	Ant(dBi)	Loss	PMea (dBm)	Limit （dBm）	Margin (dBm)	Polarity
1418.30	-34.85	8.17	9.34	-36.02	-13.00	-23.02	H
2127.24	-34.91	9.53	10.42	-35.80	-13.00	-22.80	H
2836.49	-33.22	11.27	11.12	-33.07	-13.00	-20.07	H
1418.30	-35.37	8.17	9.34	-36.54	-13.00	-23.54	V
2127.24	-33.83	9.53	10.42	-34.72	-13.00	-21.72	V
2836.49	-31.90	11.27	11.12	-31.75	-13.00	-18.75	V
LTE Band 17 / 10MHz / QPSK / RB Size 1 Offset 0/ The Worst Test Results for Middle							
Frequency(MHz)	S G.Lev (dBm)	Ant(dBi)	Loss	PMea (dBm)	Limit （dBm）	Margin (dBm)	Polarity
1419.93	-34.82	8.17	9.34	-35.99	-13.00	-22.99	H
2129.89	-35.38	9.53	10.42	-36.27	-13.00	-23.27	H
2839.98	-33.22	11.27	11.12	-33.07	-13.00	-20.07	H
1419.93	-34.98	8.17	9.34	-36.15	-13.00	-23.15	V
2129.89	-34.57	9.53	10.42	-35.46	-13.00	-22.46	V
2839.98	-32.25	11.27	11.12	-32.10	-13.00	-19.10	V
LTE Band 17 / 10MHz / QPSK / RB Size 1 Offset 0/ The Worst Test Results for Highest							
Frequency(MHz)	S G.Lev (dBm)	Ant(dBi)	Loss	PMea (dBm)	Limit （dBm）	Margin (dBm)	Polarity
1421.06	-34.62	8.17	9.34	-35.79	-13.00	-22.79	H
2132.09	-34.35	9.53	10.42	-35.24	-13.00	-22.24	H
2842.63	-32.23	11.27	11.12	-32.08	-13.00	-19.08	H
1421.06	-34.93	8.17	9.34	-36.10	-13.00	-23.10	V
2132.09	-34.91	9.53	10.42	-35.80	-13.00	-22.80	V
2842.63	-32.25	11.27	11.12	-32.10	-13.00	-19.10	V

LTE Band 25 / 1.4MHz / QPSK / RB Size 1 Offset 0/ The Worst Test Results for Lowest							
Frequency(MHz)	S G.Lev (dBm)	Ant(dBi)	Loss	PMea (dBm)	Limit （dBm）	Margin (dBm)	Polarity
3701.23	-34.29	12.60	12.93	-34.62	-13.00	-21.62	H
5552.01	-35.32	13.10	17.11	-39.33	-13.00	-26.33	H
7402.65	-33.04	11.50	22.20	-43.74	-13.00	-30.74	H
3701.23	-34.70	12.60	12.93	-35.03	-13.00	-22.03	V
5552.01	-34.16	13.10	17.11	-38.17	-13.00	-25.17	V
7402.65	-33.13	11.50	22.20	-43.83	-13.00	-30.83	V
LTE Band 25 / 1.4MHz / QPSK / RB Size 1 Offset 0/ The Worst Test Results for Middle							
Frequency(MHz)	S G.Lev (dBm)	Ant(dBi)	Loss	PMea (dBm)	Limit （dBm）	Margin (dBm)	Polarity
3759.97	-34.74	12.60	12.93	-35.07	-13.00	-22.07	H
5640.02	-34.95	13.10	17.11	-38.96	-13.00	-25.96	H
7520.28	-32.85	11.50	22.20	-43.55	-13.00	-30.55	H
3759.97	-35.07	12.60	12.93	-35.40	-13.00	-22.40	V
5640.02	-34.09	13.10	17.11	-38.10	-13.00	-25.10	V
7520.28	-32.98	11.50	22.20	-43.68	-13.00	-30.68	V
LTE Band 25 / 1.4MHz / QPSK / RB Size 1 Offset 0/ The Worst Test Results for Highest							
Frequency(MHz)	S G.Lev (dBm)	Ant(dBi)	Loss	PMea (dBm)	Limit （dBm）	Margin (dBm)	Polarity
3818.56	-33.94	12.60	12.93	-34.27	-13.00	-21.27	H
5727.80	-34.19	13.10	17.11	-38.20	-13.00	-25.20	H
7637.01	-32.37	11.50	22.20	-43.07	-13.00	-30.07	H
3818.56	-34.81	12.60	12.93	-35.14	-13.00	-22.14	V
5727.80	-35.07	13.10	17.11	-39.08	-13.00	-26.08	V
7637.01	-32.65	11.50	22.20	-43.35	-13.00	-30.35	V

LTE Band 25 / 3MHz / QPSK / RB Size 1 Offset 0/ The Worst Test Results for Lowest							
Frequency(MHz)	S G.Lev (dBm)	Ant(dBi)	Loss	PMea (dBm)	Limit （dBm）	Margin (dBm)	Polarity
3702.90	-34.80	12.60	12.93	-35.13	-13.00	-22.13	H
5554.41	-34.90	13.10	17.11	-38.91	-13.00	-25.91	H
7405.67	-32.74	11.50	22.20	-43.44	-13.00	-30.44	H
3702.90	-35.67	12.60	12.93	-36.00	-13.00	-23.00	V
5554.41	-34.14	13.10	17.11	-38.15	-13.00	-25.15	V
7405.67	-32.83	11.50	22.20	-43.53	-13.00	-30.53	V
LTE Band 25 / 3MHz / QPSK / RB Size 1 Offset 0/ The Worst Test Results for Middle							
Frequency(MHz)	S G.Lev (dBm)	Ant(dBi)	Loss	PMea (dBm)	Limit （dBm）	Margin (dBm)	Polarity
3759.86	-33.63	12.60	12.93	-33.96	-13.00	-20.96	H
5640.20	-35.11	13.10	17.11	-39.12	-13.00	-26.12	H
7520.19	-32.85	11.50	22.20	-43.55	-13.00	-30.55	H
3759.86	-35.50	12.60	12.93	-35.83	-13.00	-22.83	V
5640.20	-34.57	13.10	17.11	-38.58	-13.00	-25.58	V
7520.19	-32.28	11.50	22.20	-42.98	-13.00	-29.98	V
LTE Band 25 / 3MHz / QPSK / RB Size 1 Offset 0/ The Worst Test Results for Highest							
Frequency(MHz)	S G.Lev (dBm)	Ant(dBi)	Loss	PMea (dBm)	Limit （dBm）	Margin (dBm)	Polarity
3816.95	-34.24	12.60	12.93	-34.57	-13.00	-21.57	H
5725.56	-34.75	13.10	17.11	-38.76	-13.00	-25.76	H
7634.02	-32.22	11.50	22.20	-42.92	-13.00	-29.92	H
3816.95	-35.09	12.60	12.93	-35.42	-13.00	-22.42	V
5725.56	-34.38	13.10	17.11	-38.39	-13.00	-25.39	V
7634.02	-32.50	11.50	22.20	-43.20	-13.00	-30.20	V

LTE Band 25 / 5MHz / QPSK / RB Size 1 Offset 0/ The Worst Test Results for Lowest							
Frequency(MHz)	S G.Lev (dBm)	Ant(dBi)	Loss	PMea (dBm)	Limit （dBm）	Margin (dBm)	Polarity
3705.11	-33.96	12.60	12.93	-34.29	-13.00	-21.29	H
5557.27	-34.50	13.10	17.11	-38.51	-13.00	-25.51	H
7409.80	-32.73	11.50	22.20	-43.43	-13.00	-30.43	H
3705.11	-35.68	12.60	12.93	-36.01	-13.00	-23.01	V
5557.27	-34.06	13.10	17.11	-38.07	-13.00	-25.07	V
7409.80	-32.42	11.50	22.20	-43.12	-13.00	-30.12	V
LTE Band 25 / 5MHz / QPSK / RB Size 1 Offset 0/ The Worst Test Results for Middle							
Frequency(MHz)	S G.Lev (dBm)	Ant(dBi)	Loss	PMea (dBm)	Limit （dBm）	Margin (dBm)	Polarity
3760.07	-34.38	12.60	12.93	-34.71	-13.00	-21.71	H
5639.84	-35.16	13.10	17.11	-39.17	-13.00	-26.17	H
7520.09	-32.59	11.50	22.20	-43.29	-13.00	-30.29	H
3760.07	-36.01	12.60	12.93	-36.34	-13.00	-23.34	V
5639.84	-33.92	13.10	17.11	-37.93	-13.00	-24.93	V
7520.09	-33.10	11.50	22.20	-43.80	-13.00	-30.80	V
LTE Band 25 / 5MHz / QPSK / RB Size 1 Offset 0/ The Worst Test Results for Highest							
Frequency(MHz)	S G.Lev (dBm)	Ant(dBi)	Loss	PMea (dBm)	Limit （dBm）	Margin (dBm)	Polarity
3815.04	-34.52	12.60	12.93	-34.85	-13.00	-21.85	H
5722.06	-34.93	13.10	17.11	-38.94	-13.00	-25.94	H
7630.20	-33.01	11.50	22.20	-43.71	-13.00	-30.71	H
3815.04	-34.77	12.60	12.93	-35.10	-13.00	-22.10	V
5722.06	-33.98	13.10	17.11	-37.99	-13.00	-24.99	V
7630.20	-31.82	11.50	22.20	-42.52	-13.00	-29.52	V

LTE Band 25 / 10MHz / QPSK / RB Size 1 Offset 0/ The Worst Test Results for Lowest							
Frequency(MHz)	S G.Lev (dBm)	Ant(dBi)	Loss	PMea (dBm)	Limit （dBm）	Margin (dBm)	Polarity
3710.29	-33.74	12.60	12.93	-34.07	-13.00	-21.07	H
5565.09	-35.31	13.10	17.11	-39.32	-13.00	-26.32	H
7420.04	-33.50	11.50	22.20	-44.20	-13.00	-31.20	H
3710.29	-35.37	12.60	12.93	-35.70	-13.00	-22.70	V
5565.09	-34.03	13.10	17.11	-38.04	-13.00	-25.04	V
7420.04	-31.79	11.50	22.20	-42.49	-13.00	-29.49	V
LTE Band 25 / 10MHz / QPSK / RB Size 1 Offset 0/ The Worst Test Results for Middle							
Frequency(MHz)	S G.Lev (dBm)	Ant(dBi)	Loss	PMea (dBm)	Limit （dBm）	Margin (dBm)	Polarity
3759.96	-33.78	12.60	12.93	-34.11	-13.00	-21.11	H
5640.28	-35.27	13.10	17.11	-39.28	-13.00	-26.28	H
7520.25	-33.43	11.50	22.20	-44.13	-13.00	-31.13	H
3759.96	-35.66	12.60	12.93	-35.99	-13.00	-22.99	V
5640.28	-34.04	13.10	17.11	-38.05	-13.00	-25.05	V
7520.25	-31.88	11.50	22.20	-42.58	-13.00	-29.58	V
LTE Band 25 / 10MHz / QPSK / RB Size 1 Offset 0/ The Worst Test Results for Highest							
Frequency(MHz)	S G.Lev (dBm)	Ant(dBi)	Loss	PMea (dBm)	Limit （dBm）	Margin (dBm)	Polarity
3810.19	-33.67	12.60	12.93	-34.00	-13.00	-21.00	H
5714.68	-34.52	13.10	17.11	-38.53	-13.00	-25.53	H
7620.29	-33.10	11.50	22.20	-43.80	-13.00	-30.80	H
3810.19	-34.91	12.60	12.93	-35.24	-13.00	-22.24	V
5714.68	-35.11	13.10	17.11	-39.12	-13.00	-26.12	V
7620.29	-32.19	11.50	22.20	-42.89	-13.00	-29.89	V

LTE Band 25 / 15MHz / QPSK / RB Size 1 Offset 0/ The Worst Test Results for Lowest							
Frequency(MHz)	S G.Lev (dBm)	Ant(dBi)	Loss	PMea (dBm)	Limit （dBm）	Margin (dBm)	Polarity
3715.21	-34.10	12.60	12.93	-34.43	-13.00	-21.43	H
5572.47	-35.12	13.10	17.11	-39.13	-13.00	-26.13	H
7430.38	-33.65	11.50	22.20	-44.35	-13.00	-31.35	H
3715.21	-34.71	12.60	12.93	-35.04	-13.00	-22.04	V
5572.47	-34.22	13.10	17.11	-38.23	-13.00	-25.23	V
7430.38	-31.90	11.50	22.20	-42.60	-13.00	-29.60	V
LTE Band 25 / 15MHz / QPSK / RB Size 1 Offset 0/ The Worst Test Results for Middle							
Frequency(MHz)	S G.Lev (dBm)	Ant(dBi)	Loss	PMea (dBm)	Limit （dBm）	Margin (dBm)	Polarity
3760.20	-34.38	12.60	12.93	-34.71	-13.00	-21.71	H
5639.82	-35.16	13.10	17.11	-39.17	-13.00	-26.17	H
7520.07	-33.39	11.50	22.20	-44.09	-13.00	-31.09	H
3760.20	-35.90	12.60	12.93	-36.23	-13.00	-23.23	V
5639.82	-34.29	13.10	17.11	-38.30	-13.00	-25.30	V
7520.07	-32.52	11.50	22.20	-43.22	-13.00	-30.22	V
LTE Band 25 / 15MHz / QPSK / RB Size 1 Offset 0/ The Worst Test Results for Highest							
Frequency(MHz)	S G.Lev (dBm)	Ant(dBi)	Loss	PMea (dBm)	Limit （dBm）	Margin (dBm)	Polarity
3805.12	-34.16	12.60	12.93	-34.49	-13.00	-21.49	H
5707.30	-34.12	13.10	17.11	-38.13	-13.00	-25.13	H
7610.24	-32.91	11.50	22.20	-43.61	-13.00	-30.61	H
3805.12	-35.44	12.60	12.93	-35.77	-13.00	-22.77	V
5707.30	-34.17	13.10	17.11	-38.18	-13.00	-25.18	V
7610.24	-32.75	11.50	22.20	-43.45	-13.00	-30.45	V

LTE Band 25 / 20MHz / QPSK / RB Size 1 Offset 0/ The Worst Test Results for Lowest							
Frequency(MHz)	S G.Lev (dBm)	Ant(dBi)	Loss	PMea (dBm)	Limit （dBm）	Margin (dBm)	Polarity
3720.10	-34.04	12.60	12.93	-34.37	-13.00	-21.37	H
5580.17	-34.94	13.10	17.11	-38.95	-13.00	-25.95	H
7440.00	-32.97	11.50	22.20	-43.67	-13.00	-30.67	H
3720.10	-35.34	12.60	12.93	-35.67	-13.00	-22.67	V
5580.17	-34.04	13.10	17.11	-38.05	-13.00	-25.05	V
7440.00	-33.06	11.50	22.20	-43.76	-13.00	-30.76	V
LTE Band 25 / 20MHz / QPSK / RB Size 1 Offset 0/ The Worst Test Results for Middle							
Frequency(MHz)	S G.Lev (dBm)	Ant(dBi)	Loss	PMea (dBm)	Limit （dBm）	Margin (dBm)	Polarity
3759.77	-34.71	12.60	12.93	-35.04	-13.00	-22.04	H
5640.21	-34.24	13.10	17.11	-38.25	-13.00	-25.25	H
7520.17	-32.86	11.50	22.20	-43.56	-13.00	-30.56	H
3759.77	-35.14	12.60	12.93	-35.47	-13.00	-22.47	V
5640.21	-34.48	13.10	17.11	-38.49	-13.00	-25.49	V
7520.17	-32.40	11.50	22.20	-43.10	-13.00	-30.10	V
LTE Band 25 / 20MHz / QPSK / RB Size 1 Offset 0/ The Worst Test Results for Highest							
Frequency(MHz)	S G.Lev (dBm)	Ant(dBi)	Loss	PMea (dBm)	Limit （dBm）	Margin (dBm)	Polarity
3800.10	-34.03	12.60	12.93	-34.36	-13.00	-21.36	H
5699.79	-34.75	13.10	17.11	-38.76	-13.00	-25.76	H
7600.22	-32.70	11.50	22.20	-43.40	-13.00	-30.40	H
3800.10	-35.68	12.60	12.93	-36.01	-13.00	-23.01	V
5699.79	-34.00	13.10	17.11	-38.01	-13.00	-25.01	V
7600.22	-32.27	11.50	22.20	-42.97	-13.00	-29.97	V

Part 22

LTE Band 26 / 1.4MHz / QPSK / RB Size 1 Offset 0/ The Worst Test Results for Lowest							
Frequency(MHz)	S G.Lev (dBm)	Ant(dBi)	Loss	PMea (dBm)	Limit （dBm）	Margin (dBm)	Polarity
1649.46	-33.87	9.56	9.72	-34.03	-13.00	-21.03	H
2473.59	-34.34	10.50	10.86	-34.70	-13.00	-21.70	H
3298.60	-32.27	12.78	11.57	-31.06	-13.00	-18.06	H
1649.46	-35.06	9.56	9.72	-35.22	-13.00	-22.22	V
2473.59	-34.62	10.50	10.86	-34.98	-13.00	-21.98	V
3298.60	-31.94	12.78	11.57	-30.73	-13.00	-17.73	V
LTE Band 26 / 1.4MHz / QPSK / RB Size 1 Offset 0/ The Worst Test Results for Middle							
Frequency(MHz)	S G.Lev (dBm)	Ant(dBi)	Loss	PMea (dBm)	Limit （dBm）	Margin (dBm)	Polarity
1672.84	-34.31	9.56	9.72	-34.47	-13.00	-21.47	H
2509.17	-34.52	10.50	10.86	-34.88	-13.00	-21.88	H
3346.07	-33.38	12.78	11.57	-32.17	-13.00	-19.17	H
1672.84	-35.07	9.56	9.72	-35.23	-13.00	-22.23	V
2509.17	-34.65	10.50	10.86	-35.01	-13.00	-22.01	V
3346.07	-33.16	12.78	11.57	-31.95	-13.00	-18.95	V
LTE Band 26 / 1.4MHz / QPSK / RB Size 1 Offset 0/ The Worst Test Results for Highest							
Frequency(MHz)	S G.Lev (dBm)	Ant(dBi)	Loss	PMea (dBm)	Limit （dBm）	Margin (dBm)	Polarity
1696.60	-33.47	9.56	9.72	-33.63	-13.00	-20.63	H
2544.62	-34.05	10.50	10.86	-34.41	-13.00	-21.41	H
3393.00	-32.90	12.78	11.57	-31.69	-13.00	-18.69	H
1696.60	-34.77	9.56	9.72	-34.93	-13.00	-21.93	V
2544.62	-34.09	10.50	10.86	-34.45	-13.00	-21.45	V
3393.00	-32.27	12.78	11.57	-31.06	-13.00	-18.06	V

LTE Band 26 / 3MHz / QPSK / RB Size 1 Offset 0/ The Worst Test Results for Lowest							
Frequency(MHz)	S G.Lev (dBm)	Ant(dBi)	Loss	PMea (dBm)	Limit （dBm）	Margin (dBm)	Polarity
1651.11	-34.11	9.56	9.72	-34.27	-13.00	-21.27	H
2476.66	-35.44	10.50	10.86	-35.80	-13.00	-22.80	H
3301.72	-33.16	12.78	11.57	-31.95	-13.00	-18.95	H
1651.11	-35.75	9.56	9.72	-35.91	-13.00	-22.91	V
2476.66	-34.49	10.50	10.86	-34.85	-13.00	-21.85	V
3301.72	-33.09	12.78	11.57	-31.88	-13.00	-18.88	V
LTE Band 26 / 3MHz / QPSK / RB Size 1 Offset 0/ The Worst Test Results for Middle							
Frequency(MHz)	S G.Lev (dBm)	Ant(dBi)	Loss	PMea (dBm)	Limit （dBm）	Margin (dBm)	Polarity
1672.82	-33.86	9.56	9.72	-34.02	-13.00	-21.02	H
2508.90	-35.47	10.50	10.86	-35.83	-13.00	-22.83	H
3346.26	-32.93	12.78	11.57	-31.72	-13.00	-18.72	H
1672.82	-35.63	9.56	9.72	-35.79	-13.00	-22.79	V
2508.90	-34.82	10.50	10.86	-35.18	-13.00	-22.18	V
3346.26	-32.55	12.78	11.57	-31.34	-13.00	-18.34	V
LTE Band 26 / 3MHz / QPSK / RB Size 1 Offset 0/ The Worst Test Results for Highest							
Frequency(MHz)	S G.Lev (dBm)	Ant(dBi)	Loss	PMea (dBm)	Limit （dBm）	Margin (dBm)	Polarity
1695.60	-33.89	9.56	9.72	-34.05	-13.00	-21.05	H
2542.43	-34.83	10.50	10.86	-35.19	-13.00	-22.19	H
3389.95	-33.36	12.78	11.57	-32.15	-13.00	-19.15	H
1695.60	-34.95	9.56	9.72	-35.11	-13.00	-22.11	V
2542.43	-35.00	10.50	10.86	-35.36	-13.00	-22.36	V
3389.95	-31.85	12.78	11.57	-30.64	-13.00	-17.64	V

LTE Band 26 / 5MHz / QPSK / RB Size 1 Offset 0/ The Worst Test Results for Lowest							
Frequency(MHz)	S G.Lev (dBm)	Ant(dBi)	Loss	PMea (dBm)	Limit （dBm）	Margin (dBm)	Polarity
1652.96	-34.48	9.56	9.72	-34.64	-13.00	-21.64	H
2479.60	-34.04	10.50	10.86	-34.40	-13.00	-21.40	H
3306.70	-33.36	12.78	11.57	-32.15	-13.00	-19.15	H
1652.96	-35.10	9.56	9.72	-35.26	-13.00	-22.26	V
2479.60	-34.33	10.50	10.86	-34.69	-13.00	-21.69	V
3306.70	-31.89	12.78	11.57	-30.68	-13.00	-17.68	V
LTE Band 26 / 5MHz / QPSK / RB Size 1 Offset 0/ The Worst Test Results for Middle							
Frequency(MHz)	S G.Lev (dBm)	Ant(dBi)	Loss	PMea (dBm)	Limit （dBm）	Margin (dBm)	Polarity
1672.83	-34.60	9.56	9.72	-34.76	-13.00	-21.76	H
2509.30	-35.28	10.50	10.86	-35.64	-13.00	-22.64	H
3346.28	-33.47	12.78	11.57	-32.26	-13.00	-19.26	H
1672.83	-34.63	9.56	9.72	-34.79	-13.00	-21.79	V
2509.30	-34.97	10.50	10.86	-35.33	-13.00	-22.33	V
3346.28	-32.95	12.78	11.57	-31.74	-13.00	-18.74	V
LTE Band 26 / 5MHz / QPSK / RB Size 1 Offset 0/ The Worst Test Results for Highest							
Frequency(MHz)	S G.Lev (dBm)	Ant(dBi)	Loss	PMea (dBm)	Limit （dBm）	Margin (dBm)	Polarity
1693.81	-34.72	9.56	9.72	-34.88	-13.00	-21.88	H
2539.47	-34.69	10.50	10.86	-35.05	-13.00	-22.05	H
3386.03	-32.83	12.78	11.57	-31.62	-13.00	-18.62	H
1693.81	-35.92	9.56	9.72	-36.08	-13.00	-23.08	V
2539.47	-33.88	10.50	10.86	-34.24	-13.00	-21.24	V
3386.03	-33.12	12.78	11.57	-31.91	-13.00	-18.91	V

LTE Band 26 / 10MHz / QPSK / RB Size 1 Offset 0/ The Worst Test Results for Lowest							
Frequency(MHz)	S G.Lev (dBm)	Ant(dBi)	Loss	PMea (dBm)	Limit （dBm）	Margin (dBm)	Polarity
1657.86	-34.50	9.56	9.72	-34.66	-13.00	-21.66	H
2486.43	-34.09	10.50	10.86	-34.45	-13.00	-21.45	H
3315.63	-32.94	12.78	11.57	-31.73	-13.00	-18.73	H
1657.86	-35.12	9.56	9.72	-35.28	-13.00	-22.28	V
2486.43	-34.01	10.50	10.86	-34.37	-13.00	-21.37	V
3315.63	-32.68	12.78	11.57	-31.47	-13.00	-18.47	V
LTE Band 26 / 10MHz / QPSK / RB Size 1 Offset 0/ The Worst Test Results for Middle							
Frequency(MHz)	S G.Lev (dBm)	Ant(dBi)	Loss	PMea (dBm)	Limit （dBm）	Margin (dBm)	Polarity
1673.15	-34.33	9.56	9.72	-34.49	-13.00	-21.49	H
2509.25	-34.14	10.50	10.86	-34.50	-13.00	-21.50	H
3346.06	-33.32	12.78	11.57	-32.11	-13.00	-19.11	H
1673.15	-35.55	9.56	9.72	-35.71	-13.00	-22.71	V
2509.25	-34.72	10.50	10.86	-35.08	-13.00	-22.08	V
3346.06	-31.98	12.78	11.57	-30.77	-13.00	-17.77	V
LTE Band 26 / 10MHz / QPSK / RB Size 1 Offset 0/ The Worst Test Results for Highest							
Frequency(MHz)	S G.Lev (dBm)	Ant(dBi)	Loss	PMea (dBm)	Limit （dBm）	Margin (dBm)	Polarity
1688.55	-34.62	9.56	9.72	-34.78	-13.00	-21.78	H
2532.33	-34.22	10.50	10.86	-34.58	-13.00	-21.58	H
3376.21	-33.48	12.78	11.57	-32.27	-13.00	-19.27	H
1688.55	-35.96	9.56	9.72	-36.12	-13.00	-23.12	V
2532.33	-34.60	10.50	10.86	-34.96	-13.00	-21.96	V
3376.21	-31.77	12.78	11.57	-30.56	-13.00	-17.56	V

LTE Band 26 / 15MHz / QPSK / RB Size 1 Offset 0/ The Worst Test Results for Lowest							
Frequency(MHz)	S G.Lev (dBm)	Ant(dBi)	Loss	PMea (dBm)	Limit （dBm）	Margin (dBm)	Polarity
1663.11	-34.19	9.56	9.72	-34.35	-13.00	-21.35	H
2494.28	-34.18	10.50	10.86	-34.54	-13.00	-21.54	H
3325.82	-32.82	12.78	11.57	-31.61	-13.00	-18.61	H
1663.11	-35.01	9.56	9.72	-35.17	-13.00	-22.17	V
2494.28	-34.17	10.50	10.86	-34.53	-13.00	-21.53	V
3325.82	-32.47	12.78	11.57	-31.26	-13.00	-18.26	V
LTE Band 26 / 15MHz / QPSK / RB Size 1 Offset 0/ The Worst Test Results for Middle							
Frequency(MHz)	S G.Lev (dBm)	Ant(dBi)	Loss	PMea (dBm)	Limit （dBm）	Margin (dBm)	Polarity
1673.13	-33.45	9.56	9.72	-33.61	-13.00	-20.61	H
2508.85	-35.30	10.50	10.86	-35.66	-13.00	-22.66	H
3345.87	-32.89	12.78	11.57	-31.68	-13.00	-18.68	H
1673.13	-34.89	9.56	9.72	-35.05	-13.00	-22.05	V
2508.85	-34.51	10.50	10.86	-34.87	-13.00	-21.87	V
3345.87	-32.74	12.78	11.57	-31.53	-13.00	-18.53	V
LTE Band 26 / 15MHz / QPSK / RB Size 1 Offset 0/ The Worst Test Results for Highest							
Frequency(MHz)	S G.Lev (dBm)	Ant(dBi)	Loss	PMea (dBm)	Limit （dBm）	Margin (dBm)	Polarity
1683.61	-34.24	9.56	9.72	-34.40	-13.00	-21.40	H
2524.42	-34.64	10.50	10.86	-35.00	-13.00	-22.00	H
3366.45	-32.59	12.78	11.57	-31.38	-13.00	-18.38	H
1683.61	-34.77	9.56	9.72	-34.93	-13.00	-21.93	V
2524.42	-34.43	10.50	10.86	-34.79	-13.00	-21.79	V
3366.45	-32.68	12.78	11.57	-31.47	-13.00	-18.47	V

Part 90

LTE Band 26 / 1.4MHz / QPSK / RB Size 1 Offset 0/ The Worst Test Results for Lowest							
Frequency(MHz)	S G.Lev (dBm)	Ant(dBi)	Loss	PMea (dBm)	Limit （dBm）	Margin (dBm)	Polarity
1629.19	-34.33	9.56	9.72	-34.49	-13.00	-21.49	H
2444.62	-35.27	10.50	10.86	-35.63	-13.00	-22.63	H
3258.71	-32.23	12.78	11.57	-31.02	-13.00	-18.02	H
1629.19	-35.58	9.56	9.72	-35.74	-13.00	-22.74	V
2444.62	-34.99	10.50	10.86	-35.35	-13.00	-22.35	V
3258.71	-31.97	12.78	11.57	-30.76	-13.00	-17.76	V
LTE Band 26 / 1.4MHz / QPSK / RB Size 1 Offset 0/ The Worst Test Results for Middle							
Frequency(MHz)	S G.Lev (dBm)	Ant(dBi)	Loss	PMea (dBm)	Limit （dBm）	Margin (dBm)	Polarity
1637.80	-33.69	9.56	9.72	-33.85	-13.00	-20.85	H
2457.13	-34.11	10.50	10.86	-34.47	-13.00	-21.47	H
3276.10	-33.49	12.78	11.57	-32.28	-13.00	-19.28	H
1637.80	-35.05	9.56	9.72	-35.21	-13.00	-22.21	V
2457.13	-35.21	10.50	10.86	-35.57	-13.00	-22.57	V
3276.10	-31.82	12.78	11.57	-30.61	-13.00	-17.61	V
LTE Band 26 / 1.4MHz / QPSK / RB Size 1 Offset 0/ The Worst Test Results for Highest							
Frequency(MHz)	S G.Lev (dBm)	Ant(dBi)	Loss	PMea (dBm)	Limit （dBm）	Margin (dBm)	Polarity
1646.58	-34.29	9.56	9.72	-34.45	-13.00	-21.45	H
2469.77	-34.48	10.50	10.86	-34.84	-13.00	-21.84	H
3293.07	-33.47	12.78	11.57	-32.26	-13.00	-19.26	H
1646.58	-34.69	9.56	9.72	-34.85	-13.00	-21.85	V
2469.77	-34.53	10.50	10.86	-34.89	-13.00	-21.89	V
3293.07	-32.31	12.78	11.57	-31.10	-13.00	-18.10	V

LTE Band 26 / 3MHz / QPSK / RB Size 1 Offset 0/ The Worst Test Results for Lowest							
Frequency(MHz)	S G.Lev (dBm)	Ant(dBi)	Loss	PMea (dBm)	Limit （dBm）	Margin (dBm)	Polarity
1631.44	-34.39	9.56	9.72	-34.55	-13.00	-21.55	H
2446.22	-34.32	10.50	10.86	-34.68	-13.00	-21.68	H
3262.16	-32.33	12.78	11.57	-31.12	-13.00	-18.12	H
1631.44	-35.07	9.56	9.72	-35.23	-13.00	-22.23	V
2446.22	-34.74	10.50	10.86	-35.10	-13.00	-22.10	V
3262.16	-32.38	12.78	11.57	-31.17	-13.00	-18.17	V
LTE Band 26 / 3MHz / QPSK / RB Size 1 Offset 0/ The Worst Test Results for Middle							
Frequency(MHz)	S G.Lev (dBm)	Ant(dBi)	Loss	PMea (dBm)	Limit （dBm）	Margin (dBm)	Polarity
1638.13	-33.48	9.56	9.72	-33.64	-13.00	-20.64	H
2457.20	-34.13	10.50	10.86	-34.49	-13.00	-21.49	H
3276.27	-33.27	12.78	11.57	-32.06	-13.00	-19.06	H
1638.13	-34.91	9.56	9.72	-35.07	-13.00	-22.07	V
2457.20	-34.63	10.50	10.86	-34.99	-13.00	-21.99	V
3276.27	-32.95	12.78	11.57	-31.74	-13.00	-18.74	V
LTE Band 26 / 3MHz / QPSK / RB Size 1 Offset 0/ The Worst Test Results for Highest							
Frequency(MHz)	S G.Lev (dBm)	Ant(dBi)	Loss	PMea (dBm)	Limit （dBm）	Margin (dBm)	Polarity
1644.73	-34.27	9.56	9.72	-34.43	-13.00	-21.43	H
2467.44	-34.18	10.50	10.86	-34.54	-13.00	-21.54	H
3290.20	-32.53	12.78	11.57	-31.32	-13.00	-18.32	H
1644.73	-34.81	9.56	9.72	-34.97	-13.00	-21.97	V
2467.44	-34.29	10.50	10.86	-34.65	-13.00	-21.65	V
3290.20	-33.10	12.78	11.57	-31.89	-13.00	-18.89	V

LTE Band 26 / 5MHz / QPSK / RB Size 1 Offset 0/ The Worst Test Results for Lowest							
Frequency(MHz)	S G.Lev (dBm)	Ant(dBi)	Loss	PMea (dBm)	Limit （dBm）	Margin (dBm)	Polarity
1632.76	-33.98	9.56	9.72	-34.14	-13.00	-21.14	H
2449.13	-34.97	10.50	10.86	-35.33	-13.00	-22.33	H
3265.87	-32.36	12.78	11.57	-31.15	-13.00	-18.15	H
1632.76	-34.83	9.56	9.72	-34.99	-13.00	-21.99	V
2449.13	-34.60	10.50	10.86	-34.96	-13.00	-21.96	V
3265.87	-33.19	12.78	11.57	-31.98	-13.00	-18.98	V
LTE Band 26 / 5MHz / QPSK / RB Size 1 Offset 0/ The Worst Test Results for Middle							
Frequency(MHz)	S G.Lev (dBm)	Ant(dBi)	Loss	PMea (dBm)	Limit （dBm）	Margin (dBm)	Polarity
1642.77	-34.61	9.56	9.72	-34.77	-13.00	-21.77	H
2463.83	-34.51	10.50	10.86	-34.87	-13.00	-21.87	H
3286.01	-33.09	12.78	11.57	-31.88	-13.00	-18.88	H
1642.77	-34.97	9.56	9.72	-35.13	-13.00	-22.13	V
2463.83	-35.25	10.50	10.86	-35.61	-13.00	-22.61	V
3286.01	-33.09	12.78	11.57	-31.88	-13.00	-18.88	V
LTE Band 26 / 5MHz / QPSK / RB Size 1 Offset 0/ The Worst Test Results for Highest							
Frequency(MHz)	S G.Lev (dBm)	Ant(dBi)	Loss	PMea (dBm)	Limit （dBm）	Margin (dBm)	Polarity
1693.66	-33.53	9.56	9.72	-33.69	-13.00	-20.69	H
2539.44	-35.22	10.50	10.86	-35.58	-13.00	-22.58	H
3386.06	-32.66	12.78	11.57	-31.45	-13.00	-18.45	H
1693.66	-34.81	9.56	9.72	-34.97	-13.00	-21.97	V
2539.44	-34.25	10.50	10.86	-34.61	-13.00	-21.61	V
3386.06	-31.82	12.78	11.57	-30.61	-13.00	-17.61	V

LTE Band 26 / 10MHz / QPSK / RB Size 1 Offset 0/ The Worst Test Results for Middle							
Frequency(MHz)	S G.Lev (dBm)	Ant(dBi)	Loss	PMea (dBm)	Limit （dBm）	Margin (dBm)	Polarity
1637.85	-34.01	9.56	9.72	-34.17	-13.00	-21.17	H
2457.13	-35.48	10.50	10.86	-35.84	-13.00	-22.84	H
3275.98	-33.11	12.78	11.57	-31.90	-13.00	-18.90	H
1637.85	-35.52	9.56	9.72	-35.68	-13.00	-22.68	V
2457.13	-35.05	10.50	10.86	-35.41	-13.00	-22.41	V
3275.98	-32.93	12.78	11.57	-31.72	-13.00	-18.72	V

LTE Band 66 / 1.4MHz / QPSK / RB Size 1 Offset 0/ The Worst Test Results for Lowest							
Frequency(MHz)	S G.Lev (dBm)	Ant(dBi)	Loss	PMea (dBm)	Limit （dBm）	Margin (dBm)	Polarity
3421.23	-34.34	12.90	12.56	-34.00	-13.00	-21.00	H
5132.02	-33.99	13.10	16.32	-37.21	-13.00	-24.21	H
6842.50	-32.78	12.33	21.13	-41.58	-13.00	-28.58	H
3421.23	-34.98	12.90	12.56	-34.64	-13.00	-21.64	V
5132.02	-34.40	13.10	16.32	-37.62	-13.00	-24.62	V
6842.50	-32.84	12.33	21.13	-41.64	-13.00	-28.64	V
LTE Band 66 / 1.4MHz / QPSK / RB Size 1 Offset 0/ The Worst Test Results for Middle							
Frequency(MHz)	S G.Lev (dBm)	Ant(dBi)	Loss	PMea (dBm)	Limit （dBm）	Margin (dBm)	Polarity
3489.88	-34.00	12.90	12.56	-33.66	-13.00	-20.66	H
5234.90	-34.70	13.10	16.32	-37.92	-13.00	-24.92	H
6979.89	-32.51	12.33	21.13	-41.31	-13.00	-28.31	H
3489.88	-34.80	12.90	12.56	-34.46	-13.00	-21.46	V
5234.90	-35.18	13.10	16.32	-38.40	-13.00	-25.40	V
6979.89	-32.42	12.33	21.13	-41.22	-13.00	-28.22	V
LTE Band 66 / 1.4MHz / QPSK / RB Size 1 Offset 0/ The Worst Test Results for Highest							
Frequency(MHz)	S G.Lev (dBm)	Ant(dBi)	Loss	PMea (dBm)	Limit （dBm）	Margin (dBm)	Polarity
3557.78	-34.21	12.90	12.56	-33.87	-13.00	-20.87	H
5336.90	-35.42	13.10	16.32	-38.64	-13.00	-25.64	H
7116.77	-32.74	12.33	21.13	-41.54	-13.00	-28.54	H
3557.78	-34.81	12.90	12.56	-34.47	-13.00	-21.47	V
5336.90	-34.53	13.10	16.32	-37.75	-13.00	-24.75	V
7116.77	-32.55	12.33	21.13	-41.35	-13.00	-28.35	V

LTE Band 66 / 3MHz / QPSK / RB Size 1 Offset 0/ The Worst Test Results for Lowest							
Frequency(MHz)	S G.Lev (dBm)	Ant(dBi)	Loss	PMea (dBm)	Limit （dBm）	Margin (dBm)	Polarity
3423.17	-34.89	12.90	12.56	-34.55	-13.00	-21.55	H
5134.10	-35.04	13.10	16.32	-38.26	-13.00	-25.26	H
6846.01	-33.41	12.33	21.13	-42.21	-13.00	-29.21	H
3423.17	-34.82	12.90	12.56	-34.48	-13.00	-21.48	V
5134.10	-33.79	13.10	16.32	-37.01	-13.00	-24.01	V
6846.01	-32.14	12.33	21.13	-40.94	-13.00	-27.94	V
LTE Band 66 / 3MHz / QPSK / RB Size 1 Offset 0/ The Worst Test Results for Middle							
Frequency(MHz)	S G.Lev (dBm)	Ant(dBi)	Loss	PMea (dBm)	Limit （dBm）	Margin (dBm)	Polarity
3489.83	-34.71	12.90	12.56	-34.37	-13.00	-21.37	H
5235.11	-34.14	13.10	16.32	-37.36	-13.00	-24.36	H
6979.92	-32.87	12.33	21.13	-41.67	-13.00	-28.67	H
3489.83	-35.63	12.90	12.56	-35.29	-13.00	-22.29	V
5235.11	-34.98	13.10	16.32	-38.20	-13.00	-25.20	V
6979.92	-32.31	12.33	21.13	-41.11	-13.00	-28.11	V
LTE Band 66 / 3MHz / QPSK / RB Size 1 Offset 0/ The Worst Test Results for Highest							
Frequency(MHz)	S G.Lev (dBm)	Ant(dBi)	Loss	PMea (dBm)	Limit （dBm）	Margin (dBm)	Polarity
3557.19	-34.32	12.90	12.56	-33.98	-13.00	-20.98	H
5262.23	-34.42	13.10	16.32	-37.64	-13.00	-24.64	H
7113.97	-33.27	12.33	21.13	-42.07	-13.00	-29.07	H
3557.19	-35.45	12.90	12.56	-35.11	-13.00	-22.11	V
5262.23	-34.36	13.10	16.32	-37.58	-13.00	-24.58	V
7113.97	-33.20	12.33	21.13	-42.00	-13.00	-29.00	V

LTE Band 66 / 5MHz / QPSK / RB Size 1 Offset 0/ The Worst Test Results for Lowest							
Frequency(MHz)	S G.Lev (dBm)	Ant(dBi)	Loss	PMea (dBm)	Limit （dBm）	Margin (dBm)	Polarity
3425.25	-34.67	12.90	12.56	-34.33	-13.00	-21.33	H
5137.55	-34.95	13.10	16.32	-38.17	-13.00	-25.17	H
6850.27	-32.82	12.33	21.13	-41.62	-13.00	-28.62	H
3425.25	-35.97	12.90	12.56	-35.63	-13.00	-22.63	V
5137.55	-34.43	13.10	16.32	-37.65	-13.00	-24.65	V
6850.27	-32.88	12.33	21.13	-41.68	-13.00	-28.68	V
LTE Band 66 / 5MHz / QPSK / RB Size 1 Offset 0/ The Worst Test Results for Middle							
Frequency(MHz)	S G.Lev (dBm)	Ant(dBi)	Loss	PMea (dBm)	Limit （dBm）	Margin (dBm)	Polarity
3489.78	-33.92	12.90	12.56	-33.58	-13.00	-20.58	H
5234.81	-34.71	13.10	16.32	-37.93	-13.00	-24.93	H
6980.11	-32.69	12.33	21.13	-41.49	-13.00	-28.49	H
3489.78	-35.45	12.90	12.56	-35.11	-13.00	-22.11	V
5234.81	-35.14	13.10	16.32	-38.36	-13.00	-25.36	V
6980.11	-32.28	12.33	21.13	-41.08	-13.00	-28.08	V
LTE Band 66 / 5MHz / QPSK / RB Size 1 Offset 0/ The Worst Test Results for Highest							
Frequency(MHz)	S G.Lev (dBm)	Ant(dBi)	Loss	PMea (dBm)	Limit （dBm）	Margin (dBm)	Polarity
3557.78	-34.07	12.90	12.56	-33.73	-13.00	-20.73	H
5235.11	-34.99	13.10	16.32	-38.21	-13.00	-25.21	H
7109.75	-32.66	12.33	21.13	-41.46	-13.00	-28.46	H
3557.78	-34.81	12.90	12.56	-34.47	-13.00	-21.47	V
5235.11	-34.66	13.10	16.32	-37.88	-13.00	-24.88	V
7109.75	-32.12	12.33	21.13	-40.92	-13.00	-27.92	V

LTE Band 66 / 10MHz / QPSK / RB Size 1 Offset 0/ The Worst Test Results for Lowest							
Frequency(MHz)	S G.Lev (dBm)	Ant(dBi)	Loss	PMea (dBm)	Limit （dBm）	Margin (dBm)	Polarity
3430.20	-33.79	12.90	12.56	-33.45	-13.00	-20.45	H
5144.84	-35.33	13.10	16.32	-38.55	-13.00	-25.55	H
6880.22	-32.60	12.33	21.13	-41.40	-13.00	-28.40	H
3430.20	-35.26	12.90	12.56	-34.92	-13.00	-21.92	V
5144.84	-33.93	13.10	16.32	-37.15	-13.00	-24.15	V
6880.22	-31.96	12.33	21.13	-40.76	-13.00	-27.76	V
LTE Band 66 / 10MHz / QPSK / RB Size 1 Offset 0/ The Worst Test Results for Middle							
Frequency(MHz)	S G.Lev (dBm)	Ant(dBi)	Loss	PMea (dBm)	Limit （dBm）	Margin (dBm)	Polarity
3489.83	-34.18	12.90	12.56	-33.84	-13.00	-20.84	H
5235.24	-34.33	13.10	16.32	-37.55	-13.00	-24.55	H
6980.14	-32.94	12.33	21.13	-41.74	-13.00	-28.74	H
3489.83	-35.91	12.90	12.56	-35.57	-13.00	-22.57	V
5235.24	-34.62	13.10	16.32	-37.84	-13.00	-24.84	V
6980.14	-32.47	12.33	21.13	-41.27	-13.00	-28.27	V
LTE Band 66 / 10MHz / QPSK / RB Size 1 Offset 0/ The Worst Test Results for Highest							
Frequency(MHz)	S G.Lev (dBm)	Ant(dBi)	Loss	PMea (dBm)	Limit （dBm）	Margin (dBm)	Polarity
3550.37	-33.44	12.90	12.56	-33.10	-13.00	-20.10	H
5235.05	-34.57	13.10	16.32	-37.79	-13.00	-24.79	H
7100.10	-32.39	12.33	21.13	-41.19	-13.00	-28.19	H
3550.37	-34.96	12.90	12.56	-34.62	-13.00	-21.62	V
5235.05	-34.81	13.10	16.32	-38.03	-13.00	-25.03	V
7100.10	-32.10	12.33	21.13	-40.90	-13.00	-27.90	V

LTE Band 66 / 15MHz / QPSK / RB Size 1 Offset 0/ The Worst Test Results for Lowest							
Frequency(MHz)	S G.Lev (dBm)	Ant(dBi)	Loss	PMea (dBm)	Limit （dBm）	Margin (dBm)	Polarity
3435.27	-34.73	12.90	12.56	-34.39	-13.00	-21.39	H
5152.19	-34.11	13.10	16.32	-37.33	-13.00	-24.33	H
6869.84	-32.79	12.33	21.13	-41.59	-13.00	-28.59	H
3435.27	-35.23	12.90	12.56	-34.89	-13.00	-21.89	V
5152.19	-34.89	13.10	16.32	-38.11	-13.00	-25.11	V
6869.84	-32.85	12.33	21.13	-41.65	-13.00	-28.65	V
LTE Band 66 /15MHz / QPSK / RB Size 1 Offset 0/ The Worst Test Results for Middle							
Frequency(MHz)	S G.Lev (dBm)	Ant(dBi)	Loss	PMea (dBm)	Limit （dBm）	Margin (dBm)	Polarity
3490.06	-33.98	12.90	12.56	-33.64	-13.00	-20.64	H
5234.82	-34.11	13.10	16.32	-37.33	-13.00	-24.33	H
6980.30	-32.41	12.33	21.13	-41.21	-13.00	-28.21	H
3490.06	-35.42	12.90	12.56	-35.08	-13.00	-22.08	V
5234.82	-34.74	13.10	16.32	-37.96	-13.00	-24.96	V
6980.30	-31.91	12.33	21.13	-40.71	-13.00	-27.71	V
LTE Band 66 / 15MHz / QPSK / RB Size 1 Offset 0/ The Worst Test Results for Highest							
Frequency(MHz)	S G.Lev (dBm)	Ant(dBi)	Loss	PMea (dBm)	Limit （dBm）	Margin (dBm)	Polarity
3544.87	-33.45	12.90	12.56	-33.11	-13.00	-20.11	H
5332.43	-35.10	13.10	16.32	-38.32	-13.00	-25.32	H
7090.17	-32.96	12.33	21.13	-41.76	-13.00	-28.76	H
3544.87	-35.34	12.90	12.56	-35.00	-13.00	-22.00	V
5332.43	-34.14	13.10	16.32	-37.36	-13.00	-24.36	V
7090.17	-32.77	12.33	21.13	-41.57	-13.00	-28.57	V

LTE Band 66 / 20MHz / QPSK / RB Size 1 Offset 0/ The Worst Test Results for Lowest							
Frequency(MHz)	S G.Lev (dBm)	Ant(dBi)	Loss	PMea (dBm)	Limit （dBm）	Margin (dBm)	Polarity
3440.00	-34.12	12.90	12.56	-33.78	-13.00	-20.78	H
5159.97	-35.33	13.10	16.32	-38.55	-13.00	-25.55	H
6879.77	-32.84	12.33	21.13	-41.64	-13.00	-28.64	H
3440.00	-35.00	12.90	12.56	-34.66	-13.00	-21.66	V
5159.97	-35.23	13.10	16.32	-38.45	-13.00	-25.45	V
6879.77	-32.29	12.33	21.13	-41.09	-13.00	-28.09	V
LTE Band 66 / 20MHz / QPSK / RB Size 1 Offset 0/ The Worst Test Results for Middle							
Frequency(MHz)	S G.Lev (dBm)	Ant(dBi)	Loss	PMea (dBm)	Limit （dBm）	Margin (dBm)	Polarity
3489.79	-34.08	12.90	12.56	-33.74	-13.00	-20.74	H
5235.15	-34.00	13.10	16.32	-37.22	-13.00	-24.22	H
6979.84	-32.64	12.33	21.13	-41.44	-13.00	-28.44	H
3489.79	-34.77	12.90	12.56	-34.43	-13.00	-21.43	V
5235.15	-35.24	13.10	16.32	-38.46	-13.00	-25.46	V
6979.84	-31.75	12.33	21.13	-40.55	-13.00	-27.55	V
LTE Band 66 / 20MHz / QPSK / RB Size 1 Offset 0/ The Worst Test Results for Highest							
Frequency(MHz)	S G.Lev (dBm)	Ant(dBi)	Loss	PMea (dBm)	Limit （dBm）	Margin (dBm)	Polarity
3540.14	-34.65	12.90	12.56	-34.31	-13.00	-21.31	H
5310.02	-34.14	13.10	16.32	-37.36	-13.00	-24.36	H
7080.70	-33.17	12.33	21.13	-41.97	-13.00	-28.97	H
3540.14	-34.57	12.90	12.56	-34.23	-13.00	-21.23	V
5310.02	-34.77	13.10	16.32	-37.99	-13.00	-24.99	V
7080.70	-32.18	12.33	21.13	-40.98	-13.00	-27.98	V

LTE Band 71 / 5MHz / QPSK / RB Size 1 Offset 0/ The Worst Test Results for Lowest							
Frequency(MHz)	S G.Lev (dBm)	Ant(dBi)	Loss	PMea (dBm)	Limit （dBm）	Margin (dBm)	Polarity
1331.04	-34.55	8.17	9.34	-35.72	-13.00	-22.72	H
1966.34	-34.91	9.53	10.42	-35.80	-13.00	-22.80	H
2662.04	-33.22	11.27	11.12	-33.07	-13.00	-20.07	H
1331.04	-35.43	8.17	9.34	-36.60	-13.00	-23.60	V
1966.34	-34.62	9.53	10.42	-35.51	-13.00	-22.51	V
2662.04	-32.16	11.27	11.12	-32.01	-13.00	-19.01	V
LTE Band 71 / 5MHz / QPSK / RB Size 1 Offset 0/ The Worst Test Results for Middle							
Frequency(MHz)	S G.Lev (dBm)	Ant(dBi)	Loss	PMea (dBm)	Limit （dBm）	Margin (dBm)	Polarity
1360.93	-33.71	8.17	9.34	-34.88	-13.00	-21.88	H
2041.23	-34.43	9.53	10.42	-35.32	-13.00	-22.32	H
2721.95	-33.12	11.27	11.12	-32.97	-13.00	-19.97	H
1360.93	-34.81	8.17	9.34	-35.98	-13.00	-22.98	V
2041.23	-35.01	9.53	10.42	-35.90	-13.00	-22.90	V
2721.95	-32.98	11.27	11.12	-32.83	-13.00	-19.83	V
LTE Band 71 / 5MHz / QPSK / RB Size 1 Offset 0/ The Worst Test Results for Highest							
Frequency(MHz)	S G.Lev (dBm)	Ant(dBi)	Loss	PMea (dBm)	Limit （dBm）	Margin (dBm)	Polarity
1390.82	-34.85	8.17	9.34	-36.02	-13.00	-23.02	H
2086.05	-34.02	9.53	10.42	-34.91	-13.00	-21.91	H
2781.85	-33.19	11.27	11.12	-33.04	-13.00	-20.04	H
1390.82	-35.27	8.17	9.34	-36.44	-13.00	-23.44	V
2086.05	-34.46	9.53	10.42	-35.35	-13.00	-22.35	V
2781.85	-31.86	11.27	11.12	-31.71	-13.00	-18.71	V

LTE Band 71 / 10MHz / QPSK / RB Size 1 Offset 0/ The Worst Test Results for Lowest							
Frequency(MHz)	S G.Lev (dBm)	Ant(dBi)	Loss	PMea (dBm)	Limit （dBm）	Margin (dBm)	Polarity
1335.85	-34.69	8.17	9.34	-35.86	-13.00	-22.86	H
2004.00	-35.02	9.53	10.42	-35.91	-13.00	-22.91	H
2671.75	-33.52	11.27	11.12	-33.37	-13.00	-20.37	H
1335.85	-35.12	8.17	9.34	-36.29	-13.00	-23.29	V
2004.00	-35.23	9.53	10.42	-36.12	-13.00	-23.12	V
2671.75	-31.86	11.27	11.12	-31.71	-13.00	-18.71	V
LTE Band 71 / 10MHz / QPSK / RB Size 1 Offset 0/ The Worst Test Results for Middle							
Frequency(MHz)	S G.Lev (dBm)	Ant(dBi)	Loss	PMea (dBm)	Limit （dBm）	Margin (dBm)	Polarity
1361.12	-33.99	8.17	9.34	-35.16	-13.00	-22.16	H
2041.30	-34.67	9.53	10.42	-35.56	-13.00	-22.56	H
2722.01	-33.14	11.27	11.12	-32.99	-13.00	-19.99	H
1361.12	-35.75	8.17	9.34	-36.92	-13.00	-23.92	V
2041.30	-34.78	9.53	10.42	-35.67	-13.00	-22.67	V
2722.01	-32.02	11.27	11.12	-31.87	-13.00	-18.87	V
LTE Band 71 / 10MHz / QPSK / RB Size 1 Offset 0/ The Worst Test Results for Highest							
Frequency(MHz)	S G.Lev (dBm)	Ant(dBi)	Loss	PMea (dBm)	Limit （dBm）	Margin (dBm)	Polarity
1385.81	-34.37	8.17	9.34	-35.54	-13.00	-22.54	H
2079.20	-34.52	9.53	10.42	-35.41	-13.00	-22.41	H
2721.80	-32.82	11.27	11.12	-32.67	-13.00	-19.67	H
1385.81	-35.84	8.17	9.34	-37.01	-13.00	-24.01	V
2079.20	-33.89	9.53	10.42	-34.78	-13.00	-21.78	V
2721.80	-31.93	11.27	11.12	-31.78	-13.00	-18.78	V

LTE Band 71 / 15MHz / QPSK / RB Size 1 Offset 0/ The Worst Test Results for Lowest							
Frequency(MHz)	S G.Lev (dBm)	Ant(dBi)	Loss	PMea (dBm)	Limit （dBm）	Margin (dBm)	Polarity
1341.13	-34.08	8.17	9.34	-35.25	-13.00	-22.25	H
2010.64	-35.04	9.53	10.42	-35.93	-13.00	-22.93	H
2681.94	-32.36	11.27	11.12	-32.21	-13.00	-19.21	H
1341.13	-35.68	8.17	9.34	-36.85	-13.00	-23.85	V
2010.64	-33.81	9.53	10.42	-34.70	-13.00	-21.70	V
2681.94	-32.51	11.27	11.12	-32.36	-13.00	-19.36	V
LTE Band 71 / 15MHz / QPSK / RB Size 1 Offset 0/ The Worst Test Results for Middle							
Frequency(MHz)	S G.Lev (dBm)	Ant(dBi)	Loss	PMea (dBm)	Limit （dBm）	Margin (dBm)	Polarity
1361.18	-34.74	8.17	9.34	-35.91	-13.00	-22.91	H
2041.67	-34.11	9.53	10.42	-35.00	-13.00	-22.00	H
2721.83	-32.18	11.27	11.12	-32.03	-13.00	-19.03	H
1361.18	-34.89	8.17	9.34	-36.06	-13.00	-23.06	V
2041.67	-35.21	9.53	10.42	-36.10	-13.00	-23.10	V
2721.83	-32.87	11.27	11.12	-32.72	-13.00	-19.72	V
LTE Band 71 / 15MHz / QPSK / RB Size 1 Offset 0/ The Worst Test Results for Highest							
Frequency(MHz)	S G.Lev (dBm)	Ant(dBi)	Loss	PMea (dBm)	Limit （dBm）	Margin (dBm)	Polarity
1381.01	-34.93	8.17	9.34	-36.10	-13.00	-23.10	H
2070.70	-34.14	9.53	10.42	-35.03	-13.00	-22.03	H
2761.75	-32.70	11.27	11.12	-32.55	-13.00	-19.55	H
1381.01	-35.08	8.17	9.34	-36.25	-13.00	-23.25	V
2070.70	-33.97	9.53	10.42	-34.86	-13.00	-21.86	V
2761.75	-32.55	11.27	11.12	-32.40	-13.00	-19.40	V

LTE Band 71 / 20MHz / QPSK / RB Size 1 Offset 0/ The Worst Test Results for Lowest							
Frequency(MHz)	S G.Lev (dBm)	Ant(dBi)	Loss	PMea (dBm)	Limit （dBm）	Margin (dBm)	Polarity
1345.76	-34.42	8.17	9.34	-35.59	-13.00	-22.59	H
2018.92	-34.32	9.53	10.42	-35.21	-13.00	-22.21	H
2691.78	-32.88	11.27	11.12	-32.73	-13.00	-19.73	H
1345.76	-34.90	8.17	9.34	-36.07	-13.00	-23.07	V
2018.92	-34.77	9.53	10.42	-35.66	-13.00	-22.66	V
2691.78	-31.98	11.27	11.12	-31.83	-13.00	-18.83	V
LTE Band 71 / 20MHz / QPSK / RB Size 1 Offset 0/ The Worst Test Results for Middle							
Frequency(MHz)	S G.Lev (dBm)	Ant(dBi)	Loss	PMea (dBm)	Limit （dBm）	Margin (dBm)	Polarity
1361.21	-34.24	8.17	9.34	-35.41	-13.00	-22.41	H
2041.62	-34.34	9.53	10.42	-35.23	-13.00	-22.23	H
2721.85	-32.78	11.27	11.12	-32.63	-13.00	-19.63	H
1361.21	-34.87	8.17	9.34	-36.04	-13.00	-23.04	V
2041.62	-35.22	9.53	10.42	-36.11	-13.00	-23.11	V
2721.85	-32.53	11.27	11.12	-32.38	-13.00	-19.38	V
LTE Band 71 / 20MHz / QPSK / RB Size 1 Offset 0/ The Worst Test Results for Highest							
Frequency(MHz)	S G.Lev (dBm)	Ant(dBi)	Loss	PMea (dBm)	Limit （dBm）	Margin (dBm)	Polarity
1376.07	-33.54	8.17	9.34	-34.71	-13.00	-21.71	H
2063.91	-34.92	9.53	10.42	-35.81	-13.00	-22.81	H
2752.02	-33.00	11.27	11.12	-32.85	-13.00	-19.85	H
1376.07	-35.60	8.17	9.34	-36.77	-13.00	-23.77	V
2063.91	-35.14	9.53	10.42	-36.03	-13.00	-23.03	V
2752.02	-32.18	11.27	11.12	-32.03	-13.00	-19.03	V

APPENDIX-PHOTOS OF TEST SETUP

Note: See test photos in setup photo document for the actual connections between Product and support equipment.

※※※※※END OF THE REPORT※※※※※