ATK

USER GUIDE
用户指南

QUICK START

烈空 F1 SERIES

01 按键和配件说明 / Introduction / 紹介 / 소개

1. Type-C口
   Type-C Port
   Type-C インタフェース
   Type-C 인터페이스

2. 鼠标左键
   Left Mouse Button
   マウスの左ボタン
   마우스 왼쪽 버튼

3. 鼠标右键
   Right Mouse Button
   マウスの右ボタン
   마우스 오른쪽 버튼

4. 滚轮
   Scroll Wheel
   マウスホイール
   마우스 휠

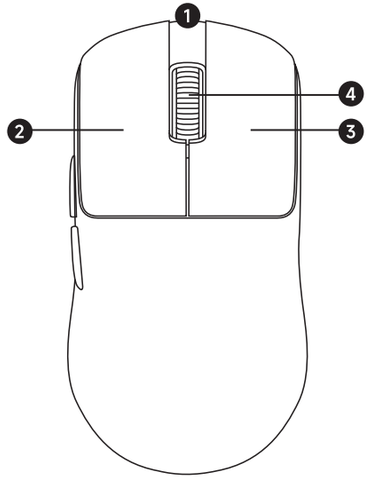

5. 指示灯
   Indicato
   インジケータ
   표시등

6. 前进侧键
   Forward Button
   前進側キー
   전진 측면 키

7. 后退侧键
   Back Button
   後退側キー
   뒤로 측면 키

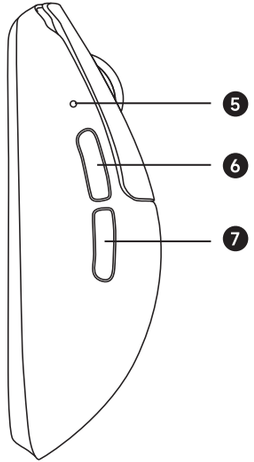

8. 脚贴区
   Feet
   フィート
   피트

9. 光学传感器
   Optical Sensor
   光センサ
   광학 센서

10. DPI切换键
    DPI Button
    DPIボタン
    DPI 버튼

11. 无线开关
    Power Switch
    電源スイッチ
    전원 스위치

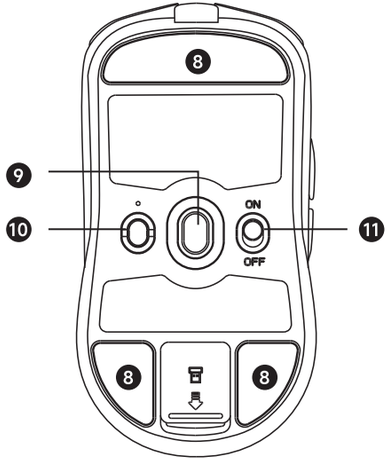

02 快速开始 / Quick Start / クイックスタート 빠른 시작

1. 充电/有线使用 Charge / Wired Mode 充電/有線モード 충전 / 유선 모드

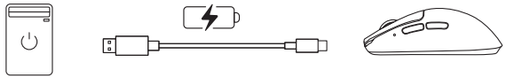

2. 无线使用 / Wireless Mode / ワイヤレスモード / 무선 모드

1).

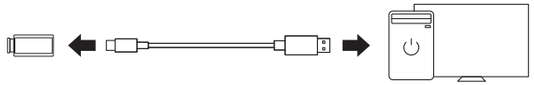

2).

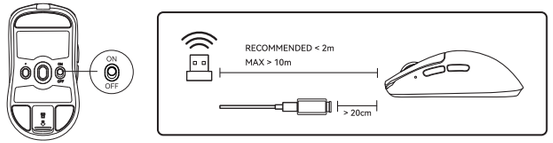

03 DPI调节 / DPI Set / DPI設定 / DPI 튜닝

按击底部DPI切换键可以快速切换DPI，免驱提供以下DPI档位和状态指示 / Press the DPI button to quickly switch the DPI. The free drive provides the following DPI set and status indications / DPIボタンを押すと、DPIをすばやく切り替えることができます。無償ドライブには、以下のDPI設定とステータスインジケータが用意されています / DPI 버튼을 눌러 DPI를 빠르게 전환합니다.무료 드라이브는 다음과 같은 DPI 설정 및 상태 지침을 제공합니다

红灯 / Red / 赤 / 빨강	400DPI
绿灯 / Green / グリーン / 그린	800DPI
蓝灯 / Blue / 青 / 파란색	1600DPI
紫灯 / Purple / パープル / 보라색	3200DPI

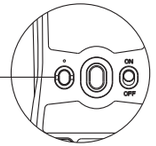

更多DPI设置需要使用驱动修改，支持50~26000DPI之间的设置 / The DPI can be set between 50 to 26000 DPI by software. / DPIは、ソフトウェアを介して50～26000 DPIの間に設定することができる / DPI는 소프트웨어를 통해 50에서 26000 DPI 사이를 설정할 수 있습니다

04 回报率设置 / Polling Rate Set / ポーリングレート 設定 / 수익률 설정

可通过驱动直接修改回报率 / Set the rate by software / ソフトウェアを使用して速度を設定します / 소프트웨어를 통해 속도를 설정합니다

05 电量状态指示 / Battery Indication / 電力量状態指示 / 전력 상태 표시

1) 指示灯红灯闪烁：电量小于10%，请充电 / Blinking In Red: 10%Battery, please charge / 赤色点滅：10%バッテリ、充電してください / 빨간색 깜박임: 10% 배터리 충전
2) 指示灯黄灯闪烁：充电中 / Blinking In Yellow: Charging / 黄色点滅：充電 / 노란색 깜박임: 충전
3) 指示灯常亮：充电完成，恢复至绿色 / Staying in Green: Charging completed / 緑のまま：充電完了 /녹색 유지: 충전 완료

Li-ion

Removal Instruction for Battery Recycling

型号：ATK F1 PRO MAX
制造商：深圳意义之塔科技有限公司
地址：深圳市南山区粤海街道高新区社区高新南七道138号惠恒大楼一期4楼4219

FCC Warning Statement
Changes or modifications not expressly approved by the party responsible for compliance could void the user's authority to operate the equipment. This equipment has been tested and found to comply with the limits for a Class B digital device, pursuant to Part 15 of the FCC Rules. These limits are designed to provide reasonable protection against harmful interference in a residential installation. This equipment generates uses and can radiate radio frequency energy and, if not installed and used in accordance with the instructions, may cause harmful interference to radio communications. However, there is no guarantee that interference will not occur in a particular installation. If this equipment does cause harmful interference to radio or television reception, which can be determined by turning the equipment off and on, the user is encouraged to try to correct the interference by one or more of the following measures:
-- Reorient or relocate the receiving antenna.
-- Increase the separation between the equipment and receiver.
--Connect the equipment into an outlet on a circuit different from that to which the receiver is connected.
-- Consult the dealer or an experienced radio/TV technician for help.

This device complies with part 15 of the FCC Rules. Operation is subject to the following two conditions:
(1) This device may not cause harmful interference, and
(2) this device must accept any interference received, including interference that may cause undesired operation.

FCC RF Radiation Exposure Statement:
1.This Transmitter must not be co-located or operating in conjunction with any other antenna or transmitter.
2.This equipment complies with RF radiation exposure limits set forth for an uncontrolled environment.
This equipment should be installed and operated with minimum distance 5mm between the radiator and your body.

驱动下载
Software Download
ソフトウェアのダウンロード
소프트웨어 다운로드
WWW.ATK.PRO

由于产品不断升级，可扫码查看最新说明书 / As the product is constantly upgraded, you can scan the code to see the latest manual / 製品が絶えずアップグレードしているので,コードを読み取って最新の説明書を見ることができます/ 제품이 끊임없이 업그레이드되기 때문에 코드를 스캔해서 최신 설명서를 볼 수 있다