YAMO®

User Manuals

Exercise Bike-YK10

EN·DE·FR·IT·ES

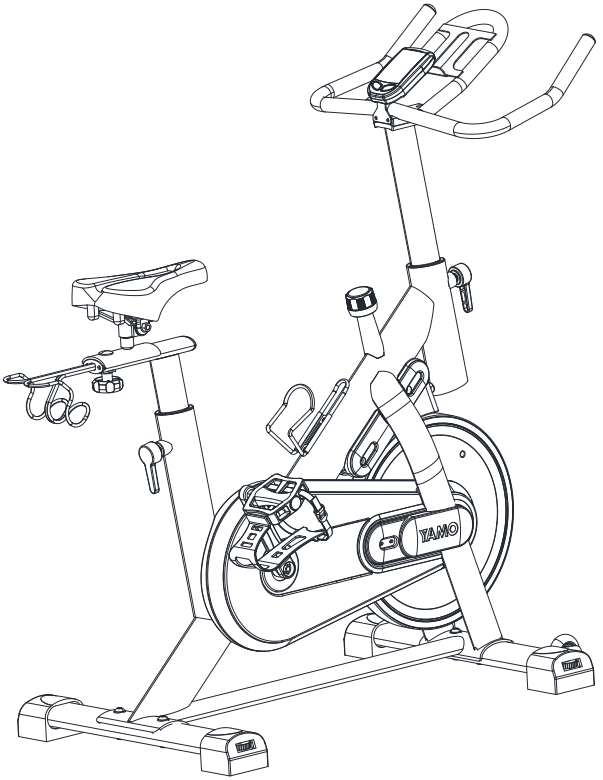

Customer Support and Assistance

Thank you for choosing our product. If you encounter any issues or require further assistance while assembling and using your product, please do not hesitate to email our customer service team. We are committed to providing you with prompt and professional support.

Customer Service Email: [support@yamofitness.com]

EN

Hey!

Please read the User Manuals carefully before using the product.
For customer service, please contact:

Email:
support@yamofitness.com

User Installation Exploded View

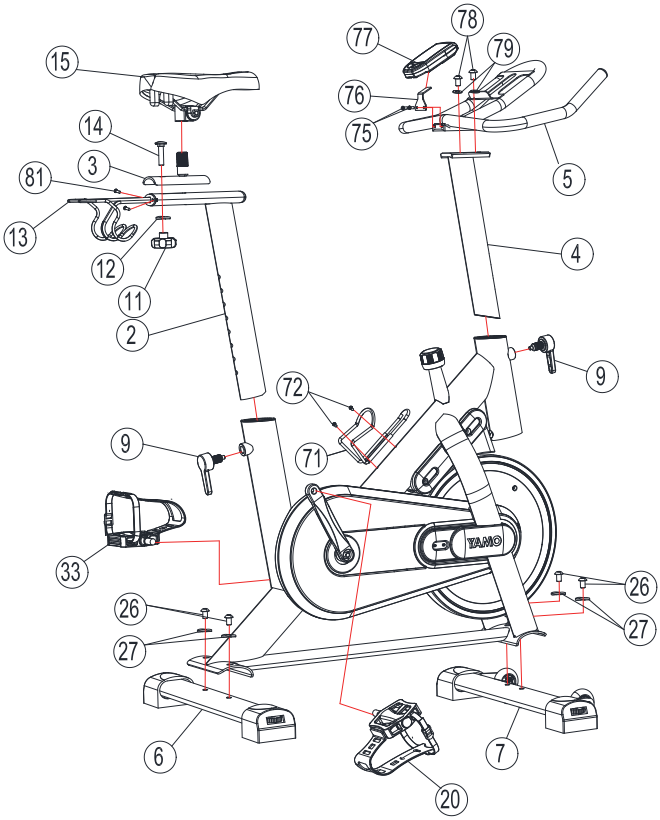

Installation Tools

Installation Steps

Step 1: Install the front and rear stabilizers

Thread the hexagonal socket head screws(26) from the bottom through the stabilizers, frame, and washers (27) as shown in the figure below, and then use tool B to fix the front stabilizer (7) and rear stabilizer (6) to the main frame (1) with the hexagonal socket head screws (26) and lock them in place.

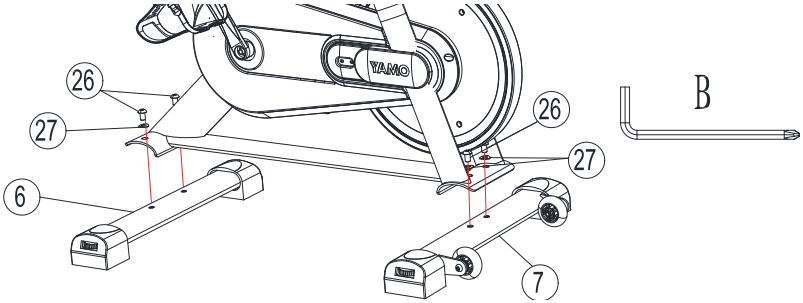

Step 2: Install the left and right pedals

Align the thread of the left pedal (20) marked with L with the threaded hole of the left crank (21) also marked with L on the frame, rotate counterclockwise to pre-lock it on the left crank (21), and then use tool C to lock it. Align the thread of the right pedal (33) marked with R with the threaded hole of the right crank(32) also marked with R on the frame, rotate clockwise to pre-lock it on the crank and then use Tool C to lock it.

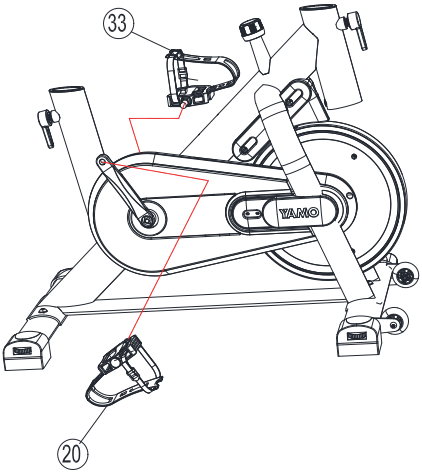

Installation Steps

Step 3: Install the seat post and the seat

Rotate the I-shaped pull pin knob (9) pre-locked on the frame to loosen it, then place the seat post (2) into the appropriate position (refer to the scale line on the tube wall), and rotate the pull pin knob (9) again to fix the seat post (2).

Place the slider (3) above the seat post (2), then pass the carriage bolt (14) through the slider (3), the seat post (2) and the enlarged and thickened arc washer (12), and secure it tightly with the knob (11). Finally, insert the seat pad (15) into the slider (3) as shown in the figure, lock it with tool C, and align the dumbbell holder (13) with the screw hole behind the seat post (2). Use the crosshead of tool B to tighten the hexagonal socket head screw (81).

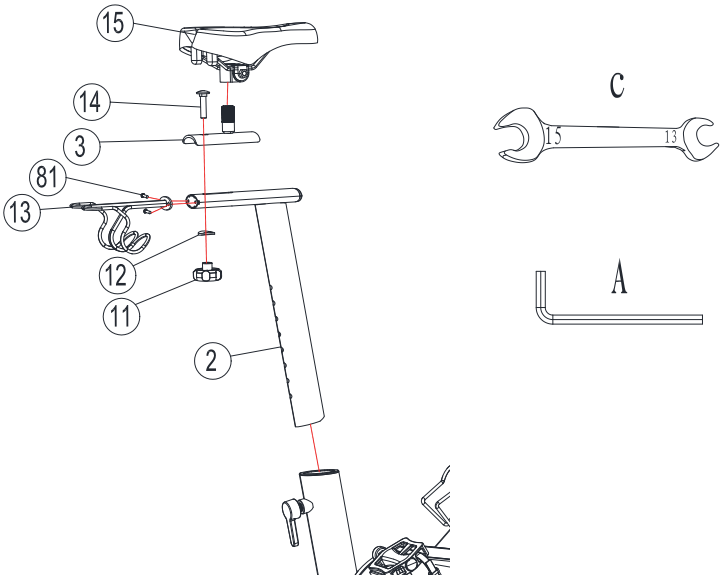

Installation Steps

Step 4: Install the handlebars, the monitor and the monitor board

Insert the handlebar height adjustment tube (4) into the main frame (1) and use the L-shaped pull pin knob (9) to adjust it to the appropriate position and lock it in place. Then place the handlebar welding (5) onto the handlebar height adjustment tube (4) and align the holes. Thread the hexagonal socket head screw (78) through the flat washer (79) and use Tool A to lock it in place. Use the crosshead of Tool B to lock the cross groove pan head screw (75) of the monitor board (76) to the corresponding position of the handlebar welding (5).Then insert the monitor (77) onto the monitor board (76).

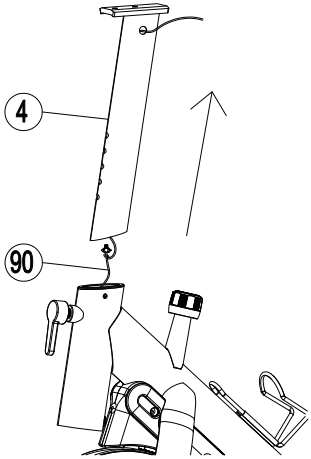

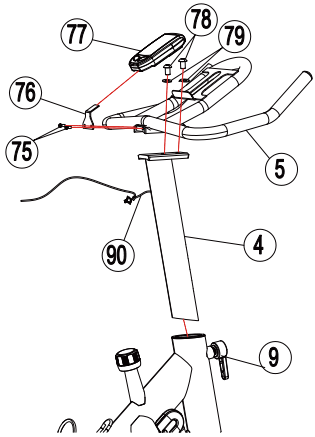

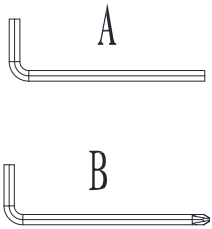

Installation Steps

Step 5: Install the water bottle holder and connect the monitor

Place the water bottle holder (71) above the frame as shown in the picture. Then tighten it with cross screws (72). Then connect the induction middle section wire (90) to the monitor.

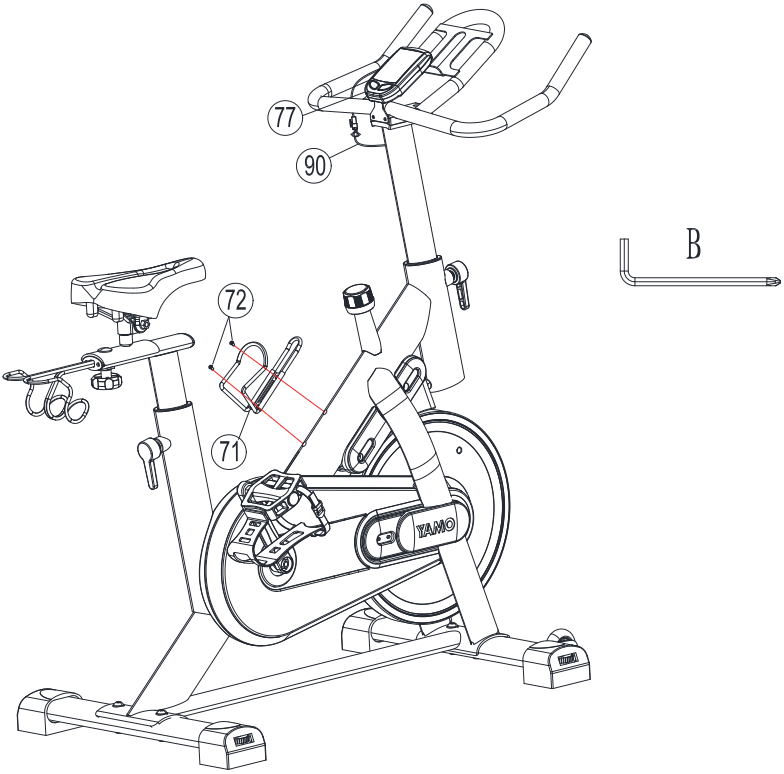

Installation Steps

Step 6: Installation completed. Please check all the installed screws and ensure they are tightened securely

1. Check whether all bolts, nuts, and pedals are in a safe state. Regularly inspect your exercise equipment and replace it immediately if any damage is found.Do not exercise until it is repaired.
2. Before exercising, please check if the pedals are loose. If there is any looseness, please repeat the installation step 2 to fix it.
3. If the seat is loose, please use an open-end wrench tool to adjust the hex nut.
4. If you need to move the fitness bike, please hold down the handlebar and press down firmly to land the front stabilizer transport wheel (36) on the ground, and the bike can move.

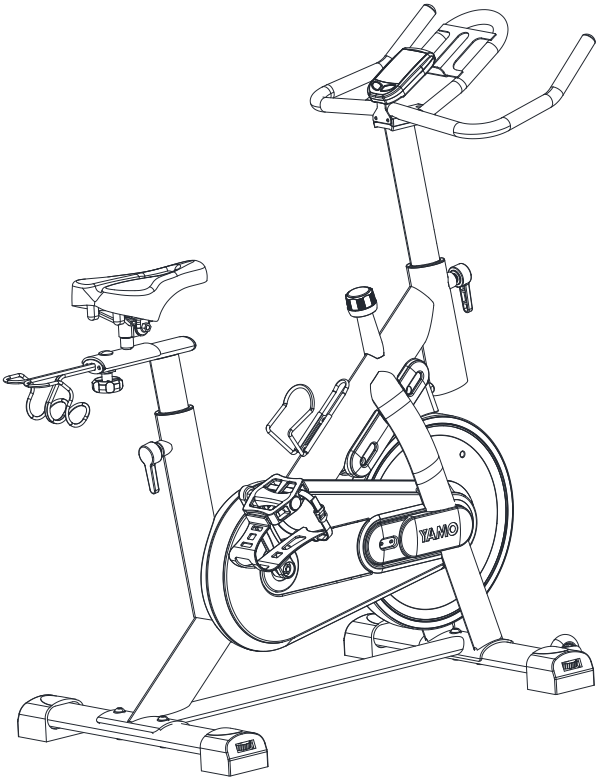

Monitor Usage Instructions

BUTTON:

1.Press the left button to select speed、distance、time and clock functions.

2. In the display TIME interface, press the right button for 3 seconds to reset the TIME、DIST、CAL value.

3. In the clock interface, press the right button for 3 seconds to enter the setting clock mode.12/24 hour system flicker, press the right button to switch 12/24 hour system, press the left button to enter the setting hour state, press the right button to adjust the hour, then press the left button to enter the setting minute state, press the right button to adjust the minutes.

4. In the display of SPEED or DIST interface, press the right button for 3 seconds to enter the setting function. Press the left button to switch the setting TIME, gender, weight and weight unit.Right click to set the function value;5 seconds no operation exit Settings mode, or long press the left key to exit Settings mode.

FUNCTION:

1.TIME:

Automatically count up exercise time during exercise.Automatically count down exercise time from target during exercise.

2.SPEED:

Display current exercise speed during exercise.

3.DISTANCE:

Automatically count up exercise distance during exercise.

4.CAL:

Automatically count up calories consumption during exercise.

5. ODOMETER:

Monitor will display the total accumulated distance.

6.RPM:

Revolution per minute.

7. CLOCK:

The current time.

NOTE:

1. Stop exercise for 4 seconds, all functions stop working.
2. Computer automatically shut down after 4 minutes without any signal input.
3. Replace the batteries while the computer displays improperly.
4. Display clock at room after the computer shut down.

SPECIFICATIONS:

FUNCTION	TIME	00:00~99:59
	CURRENT SPEED	The maximum signal can be pickup is 99.9KM/H The maximum signal can be pickup is 99.9MILE/H
	TRIP DISTANCE	0.0~999.9KM(MILE)
	CALORIES	0~999KCAL
	ODO	0~999KM(MILE)
	RPM	0-199TIMES/MIN
	CLOCK	0:00-11:59 and 0:00-23:59
BATTERY TYPE		2pcs of SIZE –AAA or UM –4
OPERATING TEMPERATURE		0°C ~ +40°C
STORAGE TEMPERATURE		-10°C ~ +60°C

Training Guide

Exercise with indoor bikes can offer a lot of benefits: better health, slimmer shape and etc.

1. WARM-UP STAGE

Warm-up can help reduce the risk of cramps or muscle damage. Stretching exercises are recommended as shown below. Each stretch should be about 30 seconds. Please proceed stretching according to your body condition.—— If you feel painful, please stop.

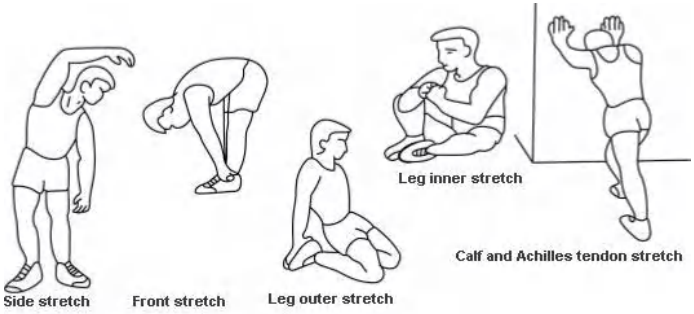

2. EXERCISE STAGE

Effort is needed. Your body will be more flexible after regular exercising for a period. It's very important to exercise with your own steady and acceptable cadence. The intensity of the exercise should allow you to reach the target heart rate range. Refer to the left image, find your age group on the x-coordinate, and then up to find your target heart rate range.

The target heart rate is suggested to last for at least 12mins to reach the exercise goal. It's suggested to +/- exercise according to the condition of your body. It's suggested to increase the intensity step by step.

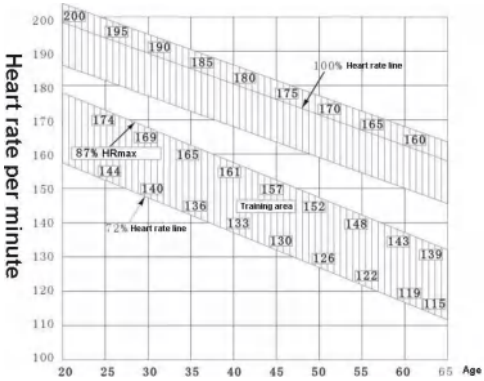

3. CALM DOWN STAGE

After exercise, repeating the stretching like we do in warm-up stage. It can help relax your body. It's suggested to last for about 5mins. Please do the stretching according to the condition of your body. Do not force your muscle.

4. ERROR CHECKING

If the display on your console cannot show correctly, please check if all connections are correct.

5. IN SHAPE

A certain training intensity is required. It means pressure on your leg's muscle. Please try your best to exercise within the intensity that your body can handle.

6. LOSE WEIGHT

The important factors are your exercise frequency and intensity. Work harder, burn more calories. We want to improve our health by training. The difference is just our exercise goals.

7. ADJUSTMENT

The seat is four directions adjustable: Up & Down & Forward & Backward. Choose the suitable seat position according to your need. Then tighten the knob. You can +/- the resistance by adjusting the brake knob. The higher the resistance, the harder you can ride. Please exercise according to the condition of your body.

⚠ NOTICE

If you want to adjust the handlebar's height, please loosen the adjust knob first, and then adjust the handlebar to your target position. Then re-tighten the knob. Notice: Please kindly noted the adjusting height should not beyond the position marked 'Stop'.

CAUTION: Changes or modifications to this unit not expressly approved by the party responsible for compliance could void the user's authority to operate the equipment.

CAUTION: This device complies with part 15 of the FCC Rules. Operation is subject to the following two conditions: (1) This device may not cause harmful interference, and (2) this device must accept any interference received, including interference that may cause undesired operation.

FCC Statement: This equipment has been tested and found to comply with the limits for a Class B digital device, pursuant to part 15 of the FCC Rules. These limits are designed to provide reasonable protection against harmful interference in a residential installation. This equipment generates, uses and can radiate radio frequency energy and, if not installed and used in accordance with the instructions, may cause harmful interference to radio communications. However, there is no guarantee that interference will not occur in a particular installation. If this equipment does cause harmful interference to radio or television reception, which can be determined by turning the equipment off and on, the user is encouraged to try to correct the interference by one or more of the following measures:
—Reorient or relocate the receiving antenna.
—Increase the separation between the equipment and receiver.
—Connect the equipment into an outlet on a circuit different from that to which the receiver is connected.
—Consult the dealer or an experienced radio/TV technician for help.

RF exposure compliance statement: This device has been evaluated to meet the general RF exposure requirement. This equipment should be installed and operated with minimum distance 20cm between the radiator and your body.

Safety Instructions

CE	This symbol stands for " Conformité Européene ", which means" Conformity with EU directives". With the CE-marking the manufacturer confirms that this product complies with applicable European directives and regulations.
UK CA	This symbol stands for "UK Conformity Assessed", which means" Conformity with British Standards11" . With the UKCA-marking the manufacturer confirms that this product complies with applicable British Standards.

Notes On Disposal

Packaging materials are raw materials and can be recycled. Separate the packaging materials correctly and dispose of them properly in the interest of the environment.
Your local administration can provide additional information.

The Spanish packaging law aims to ensure that the amount of packaging is reduced and as much packaging as possible is recycled.Your local administration can provide additional information.

Used devices do not belong in household waste!
Dispose of used devices properly! Doing so helps fulfill our responsibility to protect the environment.Your local administration can provide information on collection points and opening hours.

Batteries do not belong in household waste!
As the end user, you are legally required to return discharged batteries to a collection point. You can take your old batteries to the public collection points in your community, or you can take them to any place where batteries of that type are being sold.

EU REP

Name: Apex CE Specialists GmbH
Address: Habichtweg 1
41468 Neuss Germany
E-Mail: Info@apex-ce.com

UK REP

Name: Apex Ce Specialists Limited
Address: 6f East Union Street,
Manchester, England, M16 9AE
E-Mail: info@apex-ce.com

Exploded View

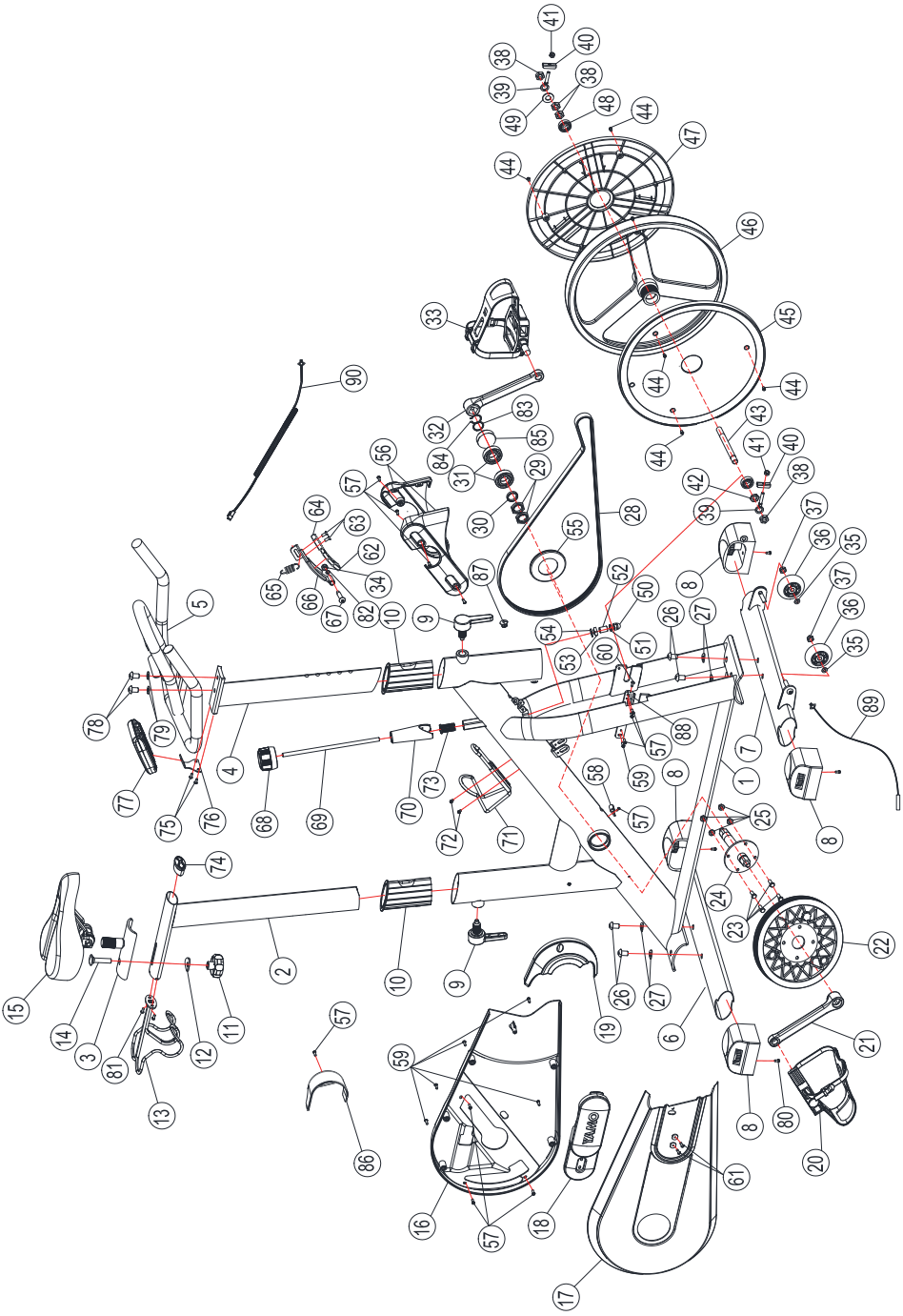

Parts List & Teileliste & Liste des pièces

NO.	NAME(EN)	NAME(DE)	NOM(FR)	SPEC.	QTY.
1	Main Frame	Hauptrahmen	Cadre Principal	-	1
2	Seat Post	Sattelstütze	Colonne De Siège	-	1
3	Slider	Schieberegler	Sliders	-	1
4	Handlebar Height Adjustment Tube	Lenkerhöhenverstellungsrohr	Tube De Réglage De La Hauteur De La Poignée	-	1
5	Handlebar Welding	Lenkerschweißen	Soudage Des Poignées	-	1
6	Rear Stabilizer	Hinterstabilisator	Stabilisateur Arrière	-	1
7	Front Stabilizer	Vorderstabilisator	Stabilisateur Avant	-	1
8	Integrated Adjustment Tube Plug	Integrierter Einstellrohrstecker	Bouchon De Tube De Régulation Intégré	-	4
9	L-Shaped Pull Pin Knob	L-Förmiger Pull Pin Knopf	Bouton De Broche De Traction En Forme De L	M16*P1.5*24*7	2
10	Inner Lining	Innenfutter	Doublure Intérieure	-	2
11	Knob	Knopf	Le Bouton	M10*φ52	1
12	Enlarged Curved Washer	Vergrößerte gebogene Unterlegscheibe	Rondelles Arc Plus Grandes Et Épaissies	Φ30*Φ10.2*3	1
13	Dumbbell Holder	Hantelhalter	Support Pour Haltères	-	1
14	Carriage Bolt	Wagenschraube	Boulons Pour Chariot	M10*P1.5*10*45L	1
15	Seat Pad	Sattelpolster	Coussins De Siège	-	1
16	Chain Cover B	Kettenabdeckung B	Couvercle De Chaîne B	-	1
17	Chain Cover A	Kettenabdeckung A	Couvercle De Chaîne a	-	1
18	Chain Cover Decorative Cover	Kettenabdeckung Dekorative Abdeckung	Couvercle Décoratif Pour Chaine	-	1
19	Right Flywheel Decorative Cover	Rechtes Schwungrad Dekorative Abdeckung	Couvercle Décoratif Volant Droit	-	1
20	Left Pedal	Linkes Pedal	Pédale Gauche	-	1
21	Left Crank	Linke Kurbel	Manivelle Gauche	9/16"-20Un-Lh*165，15.8	1
22	Plastic Belt Pulley	Riemenscheibe Aus Kunststoff	Poulie En Plastique	6Pj,φ240*20,Pa+33%Gf	1
23	Hexagon Headed Bolt	Sechskantschraube	Boulons à Tête Hexagonale	M6*10*16	4
24	Central Axis Welding	Zentralachsenschweißen	Soudage De l'Axe Central	φ82*157L，15.6	1
25	Hexagonal Flange Nut	Sechseckige Flanschmutter	Écrou à Bride Hexagonale	M6	4
26	Hexagonal Socket Head Screw	Sechseckige Buchsenkopfschraube	Vis Hexagonale Intérieure	M10*16L	4
27	Curved Washer	Gebogene Unterlegscheibe	Rondelles Arc	Φ20*Φ10.1*1.5	4
28	Belt Hp49“	Gürtel Hp49”	Ceinture Hp49 "	6Pj49",	1
29	Hexagonal Thin Nut	Sechseckige Dünne Mutter	Écrou Mince Hexagonal	M20×P1.0x6T	2
30	Spacer Ring	Distanzring	Anneau d'Espacement	φ24*φ20.1*5.0T	1
31	Deep Groove Ball Bearing	Rillenkugellager	Roulements à Billes à Gorge Profonde	6004-2Rs	2
32	Right Crank	Rechter Kurbel	Manivelle Droite	9/16"-20Un-Rh*165，15.8	1
33	Right Pedal	Rechtes Pedal	Pédale Droite	-	1
34	Nylon Nut	Nylonmutter	Écrou En Nylon	M6*P1.0*6.0T	1
35	Flat Washer	Flache Unterlegscheibe	Joint Plat	φ16*φ8.2*2.0T	2
36	Transport Wheel	Transportrad	Roue De Transport	Φ62*Φ8.3*23	2
37	Nylon Nut	Nylonmutter	Écrou En Nylon	M8*P1.25*13*7.9T	2
38	Hexagonal Thin Nut	Sechseckige Dünne Mutter	Écrou Mince Hexagonal	M12*P1.0*17*6.0T	4
39	Jack Screw	Jack Screw	Jack Vis	φ12*M6*40L	2
40	Pull Board	Ziehbrett	Plaque De Traction	-	2
41	Nylon Nut	Nylonmutter	Écrou En Nylon	M6*10*6.0T	2
42	Hexagonal Thin Nut	Sechseckige Dünne Mutter	Écrou Mince Hexagonal	M12*P1.0*17*4.0T	1
43	Flywheel Spindle	Schwungrad Spindel	Axe Principal Du Volant	M12*1.0*φ12*132	1
44	Pan Head Self Tapping Screw	Selbstschneidende Linsenkopfschraube	Vis autotaraudeuse à tête cylindrique	St3.0×10	6
45	Left Flywheel Decorative Piece	Linkes Schwungrad Dekorationsstück	Garniture De Volant Gauche	-	1

Parts List & Teileliste & Liste des pièces

NO.	NAME(EN)	NAME(DE)	NOM(FR)	SPEC.	QTY.
46	Pj Flywheel	Pj Schwungrad	Pj Volant	φ370*89，5Kg，Pj	1
47	Right Flywheel Decorative Piece	Rechtes Schwungrad Dekorationsstück	Ornement Volant Droit	-	1
48	Deep Groove Ball Bearing	Rillenkugellager	Roulements à Billes à Gorge Profonde	6201-2Rs，	2
49	Flat Washer	Flache Unterlegscheibe	Joint Plat	φ25*φ12.1*2.0T	1
50	Cap Nut	Kappenmutter	Écrou En Forme De Couvercle	M8*P1.25*13*15T	1
51	Hexagonal Thin Nut	Sechseckige Dünne Mutter	Écrou Mince Hexagonal	M8*P1.25*13*6.0T	1
52	Sleeve	Buchse	La Douille	Φ12*Φ8*17L	1
53	Brake Adjustment Nut	Bremsmutter	Écrou De Réglage Du Frein	M8*P1.25*13*13*6.0T	1
54	Rubber Washer	Gummischeibe	Rondelles En Caoutchouc	□13*2T，Black	1
55	Belt Pulley Cover	Riemenscheibenabdeckung	Couvercle De Poulie	-	1
56	Anti Sweat Covers	Anti-Schweiß-Überzüge	Couvertures anti-transpiration	-	1Set
57	Self Tapping Screw	Selbstschneidende Schraube	Vis autotaraudeuse	M4*P0.7*10L	11
58	Induction Rod Holder	Induktionsstangenhalter	Support De Barre d'Induction	-	1
59	Self Tapping Screw	Selbstschneidende Schraube	Vis autotaraudeuse	St4*15L	6
60	Cross Groove Pan Head Screw	Cross Nut Pan Head Schraube	Vis à Tête De Disque à Fente Croisée	M5*P0.8*8L	1
61	Self Tapping Screw	Selbstschneidende Schraube	Vis autotaraudeuse	St4*12L	2
62	Square Strong Magnet	Quadratischer Starker Magnet	Aimant Fort Carré	□20*8.0T*3600	3
63	Cross Groove Countersunk Head Screw	Cross Nut Countersunk Head Schraube	Vis à Tête Fraisée Cruciforme	M5*10L	2
64	Brake Pads	Bremsbeläge	Plaquettes De Frein	30.5*20.5*10T	1
65	Brake Spring	Bremsfeder	Ressort De Frein	φ1.6*φ13*40.9L	1
66	Brake Seat Welding	Bremssitzschweißen	Soudage Du Siège De Frein	-	1
67	Hexagonal Screw	Sechskantschraube	Vis d'Escalier à Tête Plate Hexagonale	M6*P1.0*40L	1
68	Brake Knob	Bremsknopf	Bouton De Frein	M8	1
69	Brake Screw Rod	Bremsschraube	Vis De Frein	M8*Φ8*240L	1
70	Brake Cover	Bremsdeckel	Couvercle De Frein	-	1
71	Water Bottle Holder	Trinkflaschenhalter	Support De Bouteille d'Eau	-	1
72	Self Tapping Screw	Selbstschneidende Schraube	Vis autotaraudeuse	M4*20L	2
73	Brake Sleeve	Bremshülse	Manchon De Frein	-	1
74	Pipe Plug	Rohrstopfen	Bouchon De Tube	Zt 25*50*1.5T Elliptical Tube	1
75	Cross Groove Pan Head Screw	Cross Nut Pan Head Schraube	Vis à Tête De Disque à Fente Croisée	M6*P1.0*10L，Grade 4.8	2
76	Monitor Board	Monitor Board	Plaque de moniteur	61*45*.2.0T	1
77	Monitor	Monitor	Moniteur	-	1
78	Hexagonal Socket Head Screw	Sechseckige Buchsenkopfschraube	Vis Hexagonale Intérieure	M10*25	2
79	Flat Washer	Flache Unterlegscheibe	Joint Plat	Φ25*Φ10.1*1.5	2
80	Self Tapping Screw	Selbstschneidende Schraube	Vis autotaraudeuse	St4.0×10	4
81	Hexagonal Socket Head Screw	Sechseckige Buchsenkopfschraube	Vis Hexagonale Intérieure	M6xp1.0x14,S5	2
82	Flat Washer	Flache Unterlegscheibe	Joint Plat	φ6xφ16x2T	1
83	Waveform Washer	Wellenförmige Unterlegscheibe	Joint En Forme d'Onde	φ20	1
84	External Circlips	Schaftdichtungsringe	Collet Élastique Pour Axe	φ20	1
85	Bearing Seat Decorative Cover	Dekorative Abdeckung Des Lagersitzes	Couvercle Décoratif Pour Siège De Roulement	-	1
86	Left Flywheel Decorative Cover	Linke Schwungrad-Dekorabdeckung	Couvercle Décoratif Volant Gauche	-	1
87	Wire Plug	Kabelverschluss	Bouchon De Câble	φ13	4
88	Front Cover Retaining Plate	Halteplatte Der Vorderen Abdeckung	Plaque De Fixation Du Couvercle Avant	45*12*.2.0T	1
89	Induction Lower Section Wire	Induktionskabel Unterer Abschnitt	Câble De La Section Inférieure De l'Induction	-	1
90	Induction Middle Section Wire	Induktionskabel Mittlerer Abschnitt	Câble De La Section Moyenne De l'Induction	-	1

Beijing Kegong Technology Co.,Ltd.
Email: support@yamofitness.com

Please contact us if you have any questions!