TEST REPORT

Product Name : MotionCaptureGlove
Model Number : DXP_CG1_LR
FCC ID : 2BECM-DXPCG1LR

Prepared for : Diver-X, inc.
Address : Ichibanchou-2 Bld.3F, 4-42, Ichibancho, Chiyoda Ku, Tokyo To, 102-0082, Japan

Prepared by : EMTEK (SHENZHEN) CO., LTD.
Address : Building 69, Majialong Industry Zone, Nanshan District, Shenzhen, Guangdong, China

Tel: (0755) 26954280
Fax: (0755) 26954282

Report Number : ENS2310310036W00102R
Date(s) of Tests : December 1, 2023 to December 19, 2023
Date of issue : December 22, 2023

TABLE OF CONTENTS

1 EUT TECHNICAL DESCRIPTION 5

2 SUMMARY OF TEST RESULT 6

3 TEST METHODOLOGY 7

3.1 GENERAL DESCRIPTION OF APPLIED STANDARDS 7
3.2 MEASUREMENT EQUIPMENT USED 7
3.3 DESCRIPTION OF TEST MODES 8

4 FACILITIES AND ACCREDITATIONS 9

4.1 FACILITIES 9
4.2 EQUIPMENT 9
4.3 LABORATORY ACCREDITATIONS AND LISTINGS 9

5 TEST SYSTEM UNCERTAINTY 10

6 SETUP OF EQUIPMENT UNDER TEST 11

6.1 RADIO FREQUENCY TEST SETUP 1 11
6.2 RADIO FREQUENCY TEST SETUP 2 11
6.3 CONDUCTED EMISSION TEST SETUP 14
6.4 BLOCK DIAGRAM CONFIGURATION OF TEST SYSTEM 15
6.5 SUPPORT EQUIPMENT 15

7 TEST REQUIREMENTS 16

7.1 MINIMUM (6DB) OCCUPIED BANDWIDTH 16
7.2 MAXIMUM PEAK CONDUCTED OUTPUT POWER 21
7.3 MAXIMUM POWER SPECTRAL DENSITY 27
7.4 UNWANTED SPURIOUS EMISSIONS 32
7.5 RADIATED EMISSION 36
7.6 CONDUCTED EMISSION TEST 51
7.7 ANTENNA APPLICATION 54

Modified Information

Version	Report No.	Revision Date	Summary
Ver.1.0	ENS2310310036W00102R	/	Original Report

TEST RESULT CERTIFICATION

Applicant	:	Diver-X, inc.
Address	:	Ichibanchou-2 Bld.3F, 4-42, Ichibancho, Chiyoda Ku, Tokyo To, 102-0082, Japan
Manufacturer	:	Diver-X, inc.
Address	:	Ichibanchou-2 Bld.3F, 4-42, Ichibancho, Chiyoda Ku, Tokyo To, 102-0082, Japan
EUT	:	MotionCaptureGlove
Model Name	:	DXP_CG1_LR
Trademark	:	ContactGlove

Measurement Procedure Used:

APPLICABLE STANDARDS	
STANDARD	**TEST RESULT**
FCC 47 CFR Part 2 , Subpart J FCC 47 CFR Part 15 , Subpart C	**PASS**

The above equipment was tested by EMTEK (SHENZHEN) CO., LTD. The test data, data evaluation, test procedures, and equipment configurations shown in this report were made in accordance with the procedures given in ANSI C63.10 (2013) and the energy emitted by the sample EUT tested as described in this report is in compliance with the above table standards requirement..

The test results of this report relate only to the tested sample identified in this report.

Date of Test	:	December 1, 2023 to December 19, 2023
Prepared by	:	Una Yu/Editor
Reviewer	:	Joe Xia/Supervisor
Approved & Authorized Signer	:	Lisa Wang/Manager

1 EUT TECHNICAL DESCRIPTION

Characteristics	Description
Product	MotionCaptureGlove
Model Number	DXP_CG1_LR
IEEE 802.11 WLAN Mode Supported	802.11b 802.11g 802.11n(20MHz channel bandwidth) 802.11n(40MHz channel bandwidth)
Modulation	DSSS with DBPSK/DQPSK/CCK for 802.11b OFDM with BPSK/QPSK/16QAM/64QAM for 802.11g/n
Operating Frequency Range	2412-2462MHz for 802.11b/g/n(HT20) 2422-2452MHz for 802.11b/g/n(HT40)
Number of Channels	11 channels for 802.11b/g/n(HT20) 9 channels for 802.11b/g/n(HT20)
Antenna Type	PCB Antenna
Antenna Gain	3.40dBi
Power Supply	DC 5V from USB port
Temperature Range	0℃ ~ +40℃

Note: *for more details, please refer to the user's manual of the EUT.*

2 SUMMARY OF TEST RESULT

FCC Part Clause	Test Parameter	Verdict	Remark
15.247(a)(2)	DTS (6dB) Bandwidth	PASS	
15.247(b)(3)	Maximum Peak Conducted Output Power	PASS	
15.247(e)	Maximum Power Spectral Density Level	PASS	
15.247(d)	Unwanted Emission Into Non-Restricted Frequency Bands	PASS	
15.247(d) 15.209	Unwanted Emission Into Restricted Frequency Bands (conducted)	PASS	
15.247(d) 15.209	Radiated Spurious Emission	PASS	
15.207	Conducted Emission Test	PASS	
15.247(b)	Antenna Application	PASS	
NOTE1: The results of this report do not take into account the uncertainty. NOTE2: According to FCC OET KDB 558074, the report use radiated measurements in the restricted frequency bands. In addition, the radiated test is also performed to ensure the emissions emanating from the device cabinet also comply with the applicable limits.			

RELATED SUBMITTAL(S) / GRANT(S):
This submittal(s) (test report) is intended for FCC ID: 2BECM-DXPCG1LR filing to comply with the above table standards requirement..

3 TEST METHODOLOGY

3.1 GENERAL DESCRIPTION OF APPLIED STANDARDS

According to its specifications, the EUT must comply with the requirements of the following standards:

FCC 47 CFR Part 2, Subpart J

FCC 47 CFR Part 15, Subpart C

FCC KDB 558074 D01 15.247 Meas Guidance v05r02

FCC KDB 662911 D01 Multiple Transmitter Output v02r01

3.2 MEASUREMENT EQUIPMENT USED

For Conducted Emission Test

Equipment	Manufacturer	Model No.	Serial No.	Last Cal.	Cal. Interval
EMI Test Receiver	Rohde & Schwarz	ESCI	101384	2023/5/13	1Year
AMN	Rohde & Schwarz	ENV216	101161	2023/5/13	1Year

For Spurious Emissions Test

Equipment	Manufacturer	Model No.	Serial No.	Last Cal.	Cal. Interval
Pre-Amplifier	Bonn	BLMA 011001N	2213967A	2023/10/23	1Year
EMI Test Receiver	Rohde & Schwarz	ESR7	102551	2023/10/23	1Year
Bilog Antenna	Schwarzbeck	VULB9163	9163142	2022/7/24	2Year
Horn antenna	Schwarzbeck	BBHA9120D	9120D-1198	2023/6/2	2Year
Pre-Amplifier	Bonn	BLMA 0118-5G	2213967B-01	2023/10/23	1Year
Spectrum Analyzer	Rohde & Schwarz	FSV3044	101290	2023/10/23	1Year
Horn antenna	Schwarzbeck	BBHA9170	9170-399	2023/5/12	2Year
Pre-Amplifier	Lunar EM	LNA18G26-40	J1012131010001	2023/5/10	1Year
Pre-Amplifier	Lunar EM	LNA26G40-40	J1013131028001	2023/5/10	1Year
Loop Antenna	Schwarzbeck	FMZB1519	1519-012	2023/5/12	2Year
Thermometer	Hegao	HTC-1	\	2023/5/16	1Year

For Other Test

Equipment	Manufacturer	Model No.	Serial No.	Last Cal.	Cal. Interval
Wideband Radio Communication Tester	R&S	CMW500	171168	2023/9/14	1Year
Frequency Extender	R&S	CMW-Z800A	100430	2023/11/1	1Year
Spectrum Analyzer	R&S	FSV3044	101289	2023/9/14	1Year
Analog Signal Generator	R&S	SMB100A	183237	2023/9/16	1Year
Vector Signal Generator	R&S	SMM100A	101808	2023/9/16	1Year
RF Control Unit(Power Meter)	Tonscend	JS0806-2	22C8060567	2023/9/14	1Year
Temperature&Humidity Chamber	ESPEC	EL-02KA	12107166	2023/5/10	1 Year

3.3 DESCRIPTION OF TEST MODES

The EUT has been tested under its typical operating condition.
The EUT configuration for testing is installed on RF field strength measurement to meet the Commissions requirement and operating in a manner which intends to maximize its emission characteristics in a continuous normal application.
The Transmitter was operated in the normal operating mode. The TX frequency was fixed which was for the purpose of the measurements.
Test of channel included the lowest and middle and highest frequency to perform the test, then record on this report.
Pre-defined engineering program for regulatory testing used to control the EUT for staying in continuous transmitting and receiving mode is programmed.

Frequency and Channel list for 802.11 b/g/n(HT20):

Channel	Frequency (MHz)	Channel	Frequency (MHz)	Channel	Frequency (MHz)
1	2412	5	2432	9	2452
2	2417	6	2437	10	2457
3	2422	7	2442	11	2462
4	2427	8	2447		

Frequency and Channel list for 802.11n(HT40):

Channel	Frequency (MHz)	Channel	Frequency (MHz)	Channel	Frequency (MHz)
3	2422	6	2437	9	2452
4	2427	7	2442		
5	2432	8	2447		

Test Frequency and Channel for 802.11 b/g/n(HT20):

Lowest Frequency		Middle Frequency		Highest Frequency	
Channel	Frequency (MHz)	Channel	Frequency (MHz)	Channel	Frequency (MHz)
1	2412	6	2437	11	2462

Test Frequency and channel for 802.11n(HT40):

Lowest Frequency		Middle Frequency		Highest Frequency	
Channel	Frequency (MHz)	Channel	Frequency (MHz)	Channel	Frequency (MHz)
3	2422	6	2437	9	2452

4 FACILITIES AND ACCREDITATIONS

4.1 FACILITIES

All measurement facilities used to collect the measurement data are located at:

EMTEK (Shenzhen) Co., Ltd.
Building 69, Majialong Industry Zone District, Nanshan District, Shenzhen, China
The sites are constructed in conformance with the requirements of ANSI C63.7, ANSI C63.4 and CISPR Publication 22.

4.2 EQUIPMENT

Radiated emissions are measured with one or more of the following types of linearly polarized antennas: tuned dipole, biconical, log periodic, bi-log, and/or ridged waveguide, horn. Spectrum analyzers with preselectors and quasi-peak detectors are used to perform radiated measurements.

Conducted emissions are measured with Line Impedance Stabilization Networks and EMI Test Receivers.

Calibrated wideband preamplifiers, coaxial cables, and coaxial attenuators are also used for making measurements.

All receiving equipment conforms to CISPR Publication 16-1, “Radio Interference Measuring Apparatus and Measurement Methods.”

4.3 LABORATORY ACCREDITATIONS AND LISTINGS

Site Description
EMC Lab. : **Accredited by CNAS**
The Certificate Registration Number is L2291
The Laboratory has been assessed and proved to be in compliance with CNAS-CL01 (identical to ISO/IEC 17025:2017)

Accredited by FCC
Designation Number: CN1204
Test Firm Registration Number: 882943

Accredited by A2LA
The Certificate Number is 4321.01

Accredited by Industry Canada
The Conformity Assessment Body Identifier is CN0008

Name of Firm : EMTEK (SHENZHEN) CO., LTD.
Site Location : Building 69, Majialong Industry Zone, Nanshan District, Shenzhen, Guangdong, China

5 TEST SYSTEM UNCERTAINTY

The following measurement uncertainty levels have been estimated for tests performed on the apparatus:

Parameter	Uncertainty
Radio Frequency	±1x10^-5
Maximum Peak Output Power Test	±1.0dB
Conducted Emissions Test	±2.0dB
Radiated Emission Test	±2.0dB
Power Density	±2.0dB
Occupied Bandwidth Test	±1.0dB
Band Edge Test	±3dB
All emission, radiated	±3dB
Antenna Port Emission	±3dB
Temperature	±0.5℃
Humidity	±3%

Measurement Uncertainty for a level of Confidence of 95%.

6 SETUP OF EQUIPMENT UNDER TEST

6.1 RADIO FREQUENCY TEST SETUP 1

The WLAN component's antenna ports(s) of the EUT are connected to the measurement instrument per an appropriate attenuator. The EUT is controlled by PC/software to emit the specified signals for the purpose of measurements.

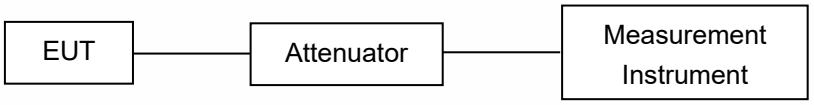

6.2 RADIO FREQUENCY TEST SETUP 2

The test site semi-anechoic chamber has met the requirement of NSA tolerance 4 dB according to the standards: ANSI C63.10. The test distance is 3m.The setup is according to the requirements in Section 13.1.4.1 of ANSI C63.10-2013 and CAN/CSA-CEI/IEC CISPR 22.
The maximal emission value is acquired by adjusting the antenna height, polarisation and turntable azimuth. Normally, the height range of antenna is 1 m to 4 m, the azimuth range of turntable is 0° to 360°, and the receive antenna has two polarizations Vertical (V) and Horizontal (H).

Below 30MHz：
The EUT is placed on a turntable 0.8 meters above the ground in the chamber, 3 meter away from the antenna (loop antenna). The Antenna should be positioned with its plane vertical at the specified distance from the EUT and rotated about its vertical axis for maximum response at each azimuth about the EUT. The center of the loop shall be 1 m above the ground. For certain applications, the loop antenna plane may also need to be positioned horizontally at the specified distance from the EUT.

Above 30MHz：
The EUT is placed on a turntable 0.8 meters above the ground in the chamber, 3 meter away from the antenna. The maximal emission value is acquired by adjusting the antenna height, polarisation and turntable azimuth. Normally, the height range of antenna is 1 m to 4 m, the azimuth range of turntable is 0° to 360°, and the receive antenna has two polarizations Vertical (V) and Horizontal (H).

Above 1GHz:
The EUT is placed on a turntable 1.5 meters above the ground in the chamber, 3 meter away from the antenna. The maximal emission value is acquired by adjusting the antenna height, polarisation and turntable azimuth. Normally, the height range of antenna is 1 m to 4 m, the azimuth range of turntable is 0° to 360°, and the receive antenna has two polarizations Vertical (V) and Horizontal (H).

Measurements shall be taken, using the following steps, at a test site that has been validated using the procedures of ANSI C63.4 or the latest CISPR 16-1-4 for measurements above 1 GHz, so as to simulate a near free-space environment (see RSS-Gen for applicable versions of ANSI and CISPR standards).
(1) Line the ground plane with absorbers between the transmitter and the receive antenna to minimize reflections. The absorbers used should have a minimum-rated attenuation of 20 dB through the measurement frequency range of interest. The absorbers shall be positioned to replicate the layout used when compliance with the applicable acceptability criterion was achieved, as set forth in the aforementioned standards on site validation.
(2) Set the height of the receive antenna to 1.5 m. The receive antenna must be one that was designed and fabricated to operate over the entire frequency range of interest, for example, an appropriate standard gain horn.
(3) The distance between the receive antenna and the radiating source shall be sufficient in order to ensure far-field conditions.
(4) Mount the transmitter at a height of 1.5 m.
(5) Configure the device under test (DUT) to produce the maximum power spectral density as measured while assessing compliance with Section 6.2.2 (i.e. channel frequency, modulation type and data rate). If the DUT is equipped with a detachable antenna and the antenna is intended for remote installation (i.e.

tower-mounted), the DUT may be substituted with a suitable signal generator. The level and frequency settings on the generator shall be set so as to reproduce the maximum power spectral density, measured within a 1 MHz bandwidth, obtained while assessing compliance to Section 6.2.2.
(6) Position the transmitter or the radiating antenna so that elevation pattern measurements can be taken.
(7) Find the 0° reference point in the horizontal plane.
(8) Care should be taken when positioning the receive antenna to avoid cross-polarization. Antennas of known mounting polarization should be assessed with the receive antenna oriented in the same polarity. If the polarization of the transmit antenna is unknown or the transmit antenna can be mounted in either polarization, e.i.r.p. measurements should be performed to find which
mounting polarity provides the highest e.i.r.p. value. Testing shall be carried out with the receive antenna and the DUT mounted in each polarity.
(9) The emission shall be centred on the display of the spectrum analyzer with the following settings:
i. If the power spectral density of the DUT was assessed with a peak detector and the antenna cannot be detached from the DUT, the spectrum analyzer shall be set to a peak detector with a resolution bandwidth and video bandwidth of 1 MHz.
ii. If the power spectral density of the DUT was assessed using a sample detector with power averaging and the antenna cannot be detached from the DUT, the spectrum analyzer shall be set to a sample detector, configured to produce 100 power averages and set with a resolution bandwidth, as well as a video bandwidth of 1 MHz.
iii. If the antenna can be detached from the DUT, a continuous wave (CW) signal equal to that of the power spectral density measurement may be used, the spectrum analyzer shall be set to peak detector with a resolution bandwidth and video bandwidth of 1 MHz.

(10) Rotate the turntable 360° recording the field strength at each step. Throughout the main beam of the antenna, the step size shall be kept to a maximum of 1°.
Once outside the main beam of the antenna, the maximum step size shall be as follows, when compared to the requirements of Section 6.2.2:
i. Between 0° and 8°, maximum step size of 2°;
ii. Between 8° and 40°, maximum step size of 4°;
iii. Between 40° and 45°, maximum step size of 1°;
iv. Between 45° and 90°, maximum step size of 5°.
Once the mask reaches 90°, the mask will be inverted and the step size will follow in the same manner as above.
For the purpose of this procedure, the main beam of the antenna is defined as the 3 dB beamwidth.
(11) Convert the measured field strength values in terms of e.i.r.p. density (dBW/1 MHz) using the following equation:

$$\text{e.i.r.p density(dBW/MHz)}=10\log((E*r)^2/30)$$

E = field strength in V/m
r = measurement distance in metres

(12) Plot the results against the emission mask with reference to the horizontal plane.
(13) Using the plot, the 0° can be rotated to determine the worst-case installation tilt angle.
(14) Testing shall be performed using the highest gain antenna for every antenna type, if applicable.
(15) Antenna type(s), antenna model number(s), and worst-case tilt angle(s) necessary to remain compliant with the elevation mask requirement set forth in Section 6.2.2(3) of RSS-247 shall be clearly indicated in the user manual.
The following figure is an example of a polar elevation mask measured using the Method 1 reference to dBμV/m at 3 m.

(a) Radiated Emission Test Set-Up, Frequency Below 30MHz

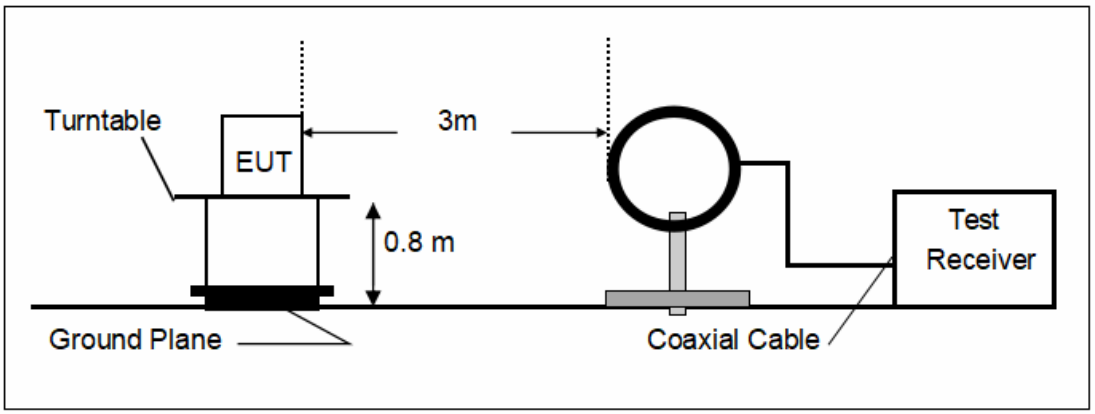

(b) Radiated Emission Test Set-Up, Frequency Below 1000MHz

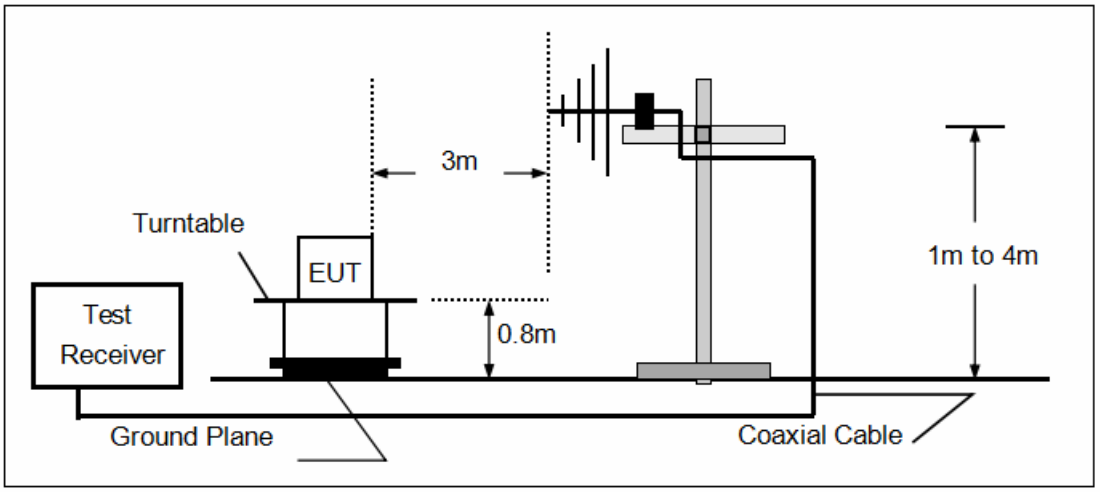

(c) Radiated Emission Test Set-Up, Frequency above 1000MHz

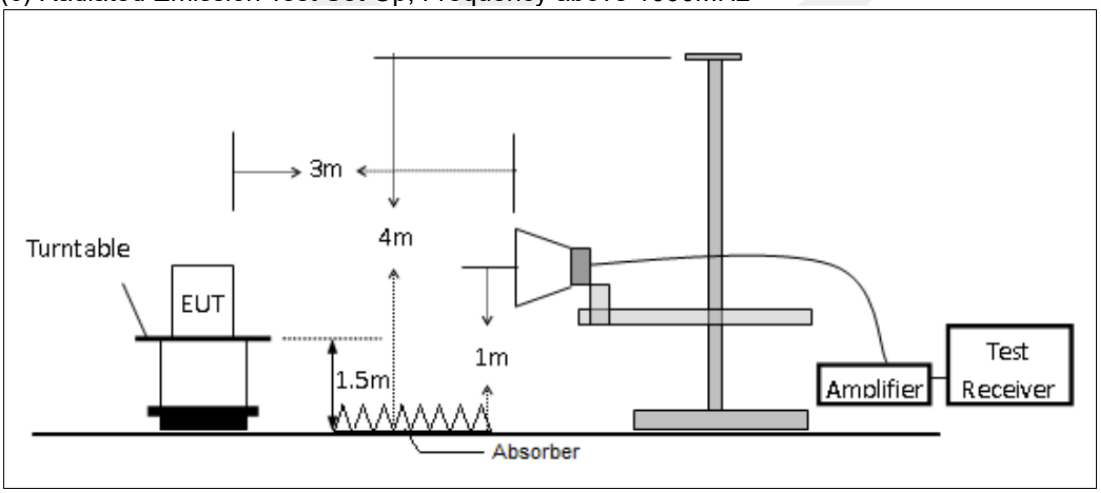

6.3 CONDUCTED EMISSION TEST SETUP

The mains cable of the EUT (maybe per AC/DC Adapter) must be connected to LISN. The LISN shall be placed 0.8 m from the boundary of EUT and bonded to a ground reference plane for LISN mounted on top of the ground reference plane. This distance is between the closest points of the LISN and the EUT. All other units of the EUT and associated equipment shall be at least 0.8m from the LISN.
Ground connections, where required for safety purposes, shall be connected to the reference ground point of the LISN and, where not otherwise provided or specified by the manufacturer, shall be of same length as the mains cable and run parallel to the mains connection at a separation distance of not more than 0.8 m.
According to the requirements in Section 13.1.4.1 of ANSI C63.10-2013 Conducted emissions from the EUT measured in the frequency range between 0.15 MHz and 30 MHz using CISPR Quasi-Peak and average detector mode.

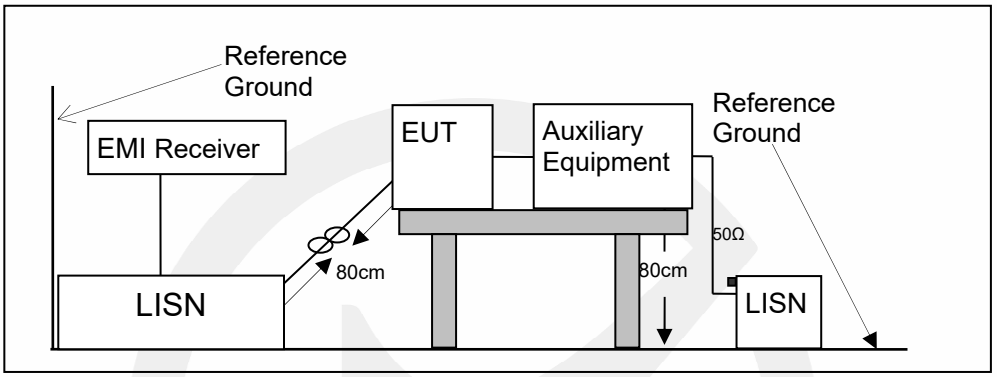

6.4 BLOCK DIAGRAM CONFIGURATION OF TEST SYSTEM

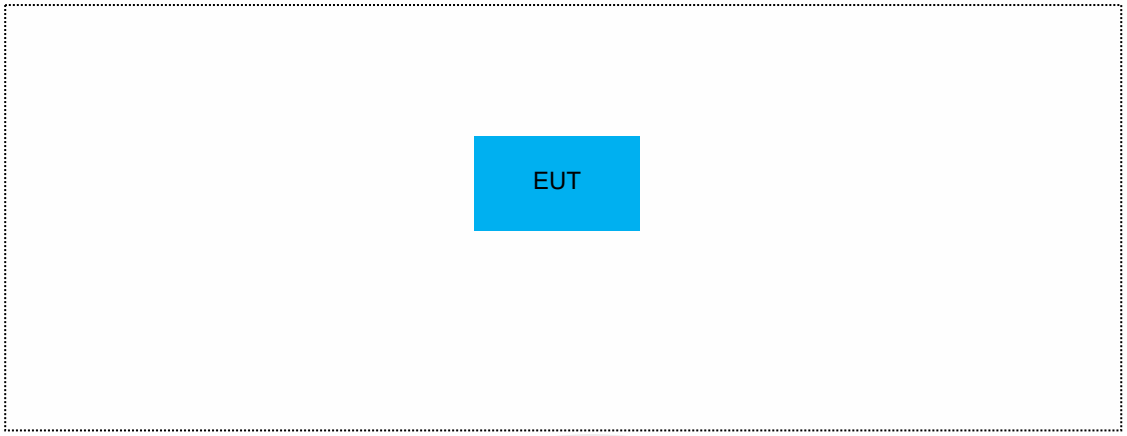

6.5 SUPPORT EQUIPMENT

EUT Cable List and Details			
Cable Description	Length (m)	Shielded/Unshielded	With / Without Ferrite

Auxiliary Cable List and Details			
Cable Description	Length (m)	Shielded/Unshielded	With / Without Ferrite

Auxiliary Equipment List and Details			
Description	Manufacturer	Model	Serial Number

Notes:

1.All the equipment/cables were placed in the worst-case configuration to maximize the emission during the test.

2.Grounding was established in accordance with the manufacturer's requirements and conditions for the intended use.

7 TEST REQUIREMENTS

7.1 MINIMUM (6DB) OCCUPIED BANDWIDTH

7.1.1 Applicable Standard

According to FCC Part15.247 (a)(2) and KDB 558074 D01 15.247 Meas Guidance v05r02

7.1.2 Conformance Limit

The minimum -6 dB bandwidth shall be at least 500 kHz.

7.1.3 Test Configuration

Test according to clause 6.1 radio frequency test setup

7.1.4 Test Procedure

The EUT was operating in WIFI mode and controlled its channel. Printed out the test result from the spectrum by hard copy function.
The RF output of EUT was connected to the spectrum analyzer by RF cable and attenuator. The path loss was compensated to the results for each measurement.
Set to the maximum power setting and enable the EUT transmit continuously
Set RBW = 100 kHz.
Set the video bandwidth (VBW) =300 kHz.
Set Span=2 times OBW
Set Detector = Peak.
Set Trace mode = max hold.
Set Sweep = auto couple.
Allow the trace to stabilize.
Measure the maximum width of the emission that is constrained by the frequencies associated with the two outermost amplitude points (upper and lower frequencies) that are attenuated by 6 dB relative to the maximum level measured in the fundamental emission.
Measure and record the results in the test report.

7.1.5 Test Results

Temperature :	25℃	ATM Pressure:	1011 mbar
Humidity :	60 %	Test Engineer:	XXH

TestMode	Antenna	Frequency[MHz]	DTS BW [MHz]	FL[MHz]	FH[MHz]	Limit[MHz]	Verdict
11B	Ant1	2412	10.000	2407.000	2417.000	0.5	PASS
		2437	9.080	2432.480	2441.560	0.5	PASS
		2462	9.560	2457.440	2467.000	0.5	PASS
11G	Ant1	2412	16.360	2403.840	2420.200	0.5	PASS
		2437	16.320	2428.840	2445.160	0.5	PASS
		2462	16.320	2453.840	2470.160	0.5	PASS
11N20SISO	Ant1	2412	17.560	2403.200	2420.760	0.5	PASS
		2437	17.520	2428.240	2445.760	0.5	PASS
		2462	17.560	2453.240	2470.800	0.5	PASS
11N40SISO	Ant1	2422	36.320	2403.840	2440.160	0.5	PASS
		2437	36.320	2418.840	2455.160	0.5	PASS
		2452	36.320	2433.840	2470.160	0.5	PASS

11B_Ant1_2412

11B_Ant1_2437

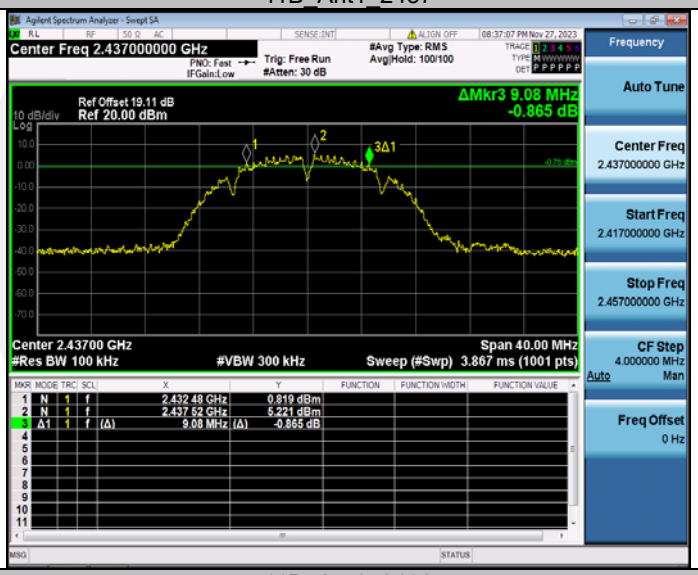

11B_Ant1_2462

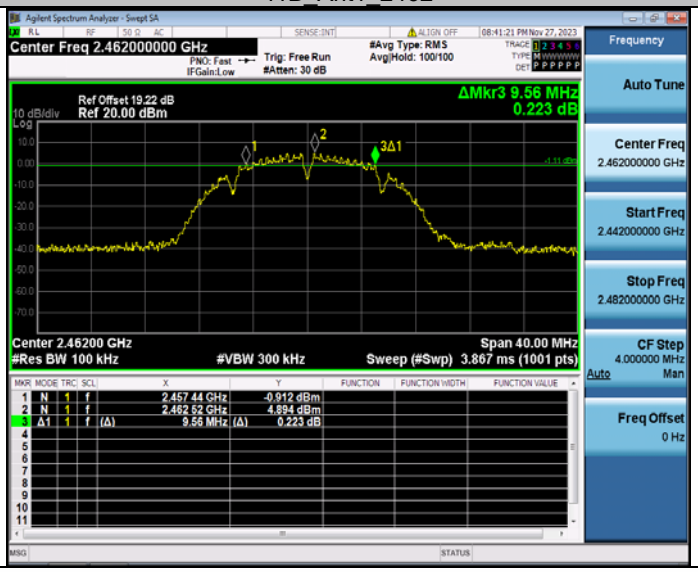

11G_Ant1_2412

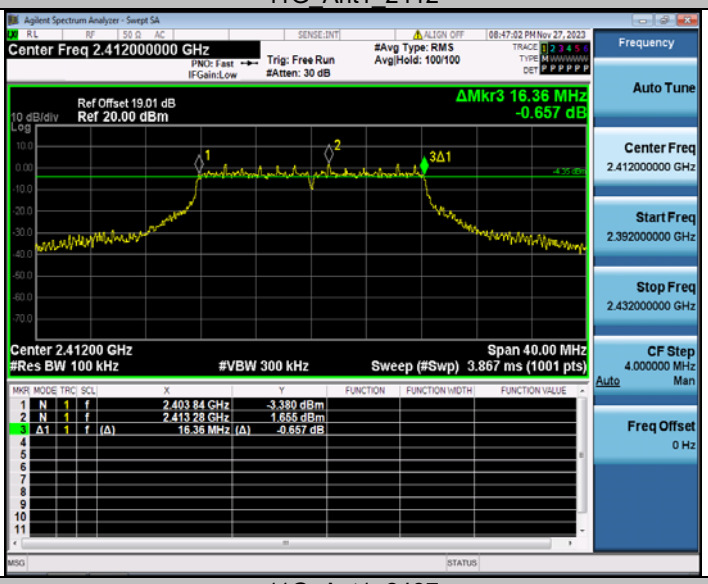

11G_Ant1_2437

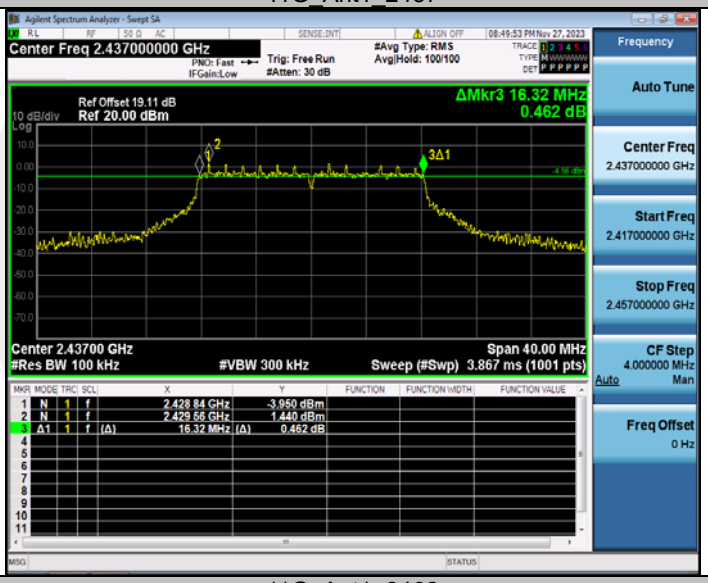

11G_Ant1_2462

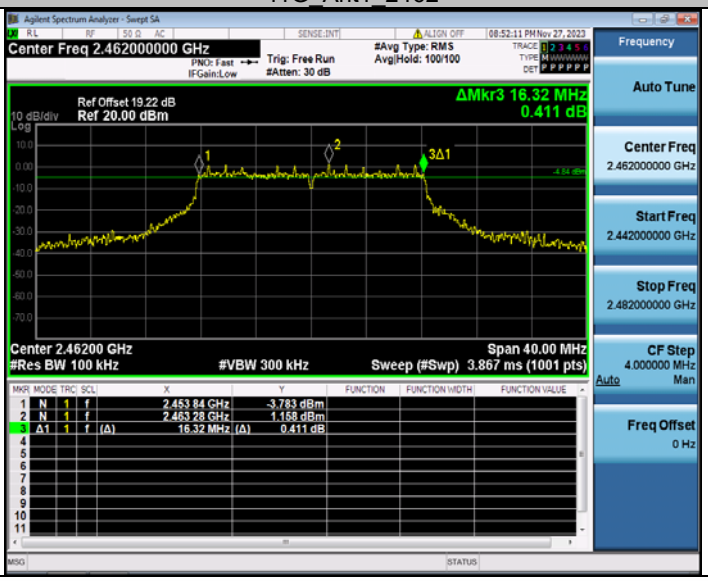

11N20SISO_Ant1_2412

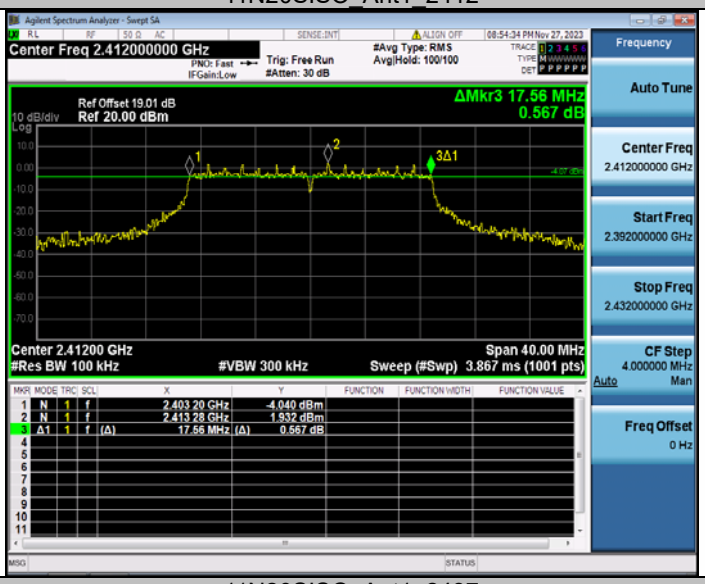

11N20SISO_Ant1_2437

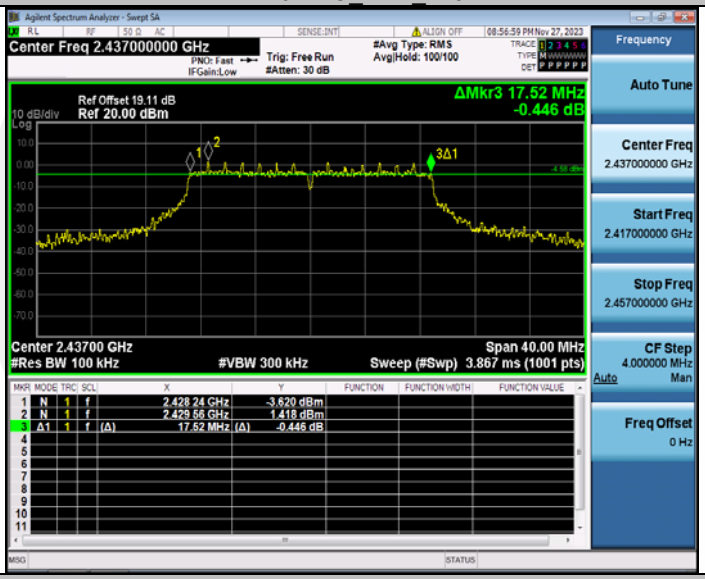

11N20SISO_Ant1_2462

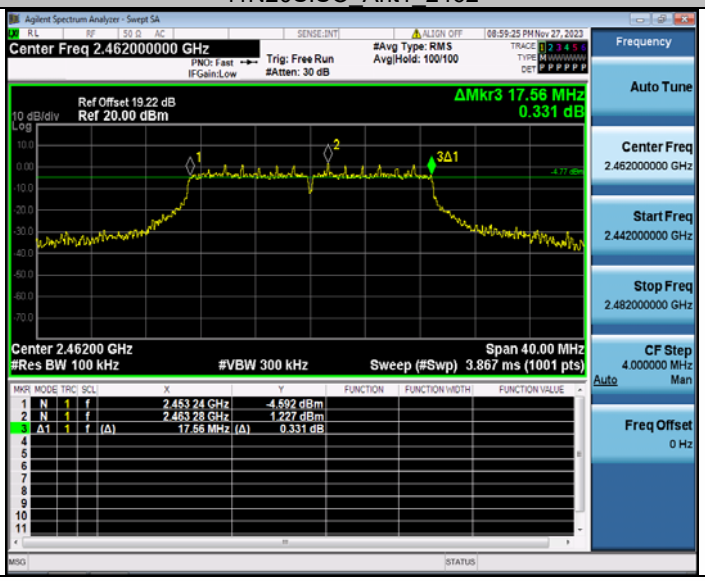

11N40SISO_Ant1_2422

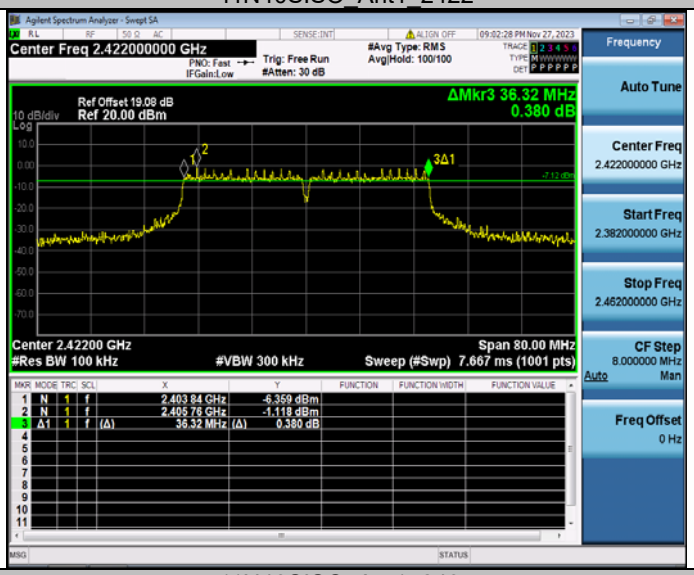

11N40SISO_Ant1_2437

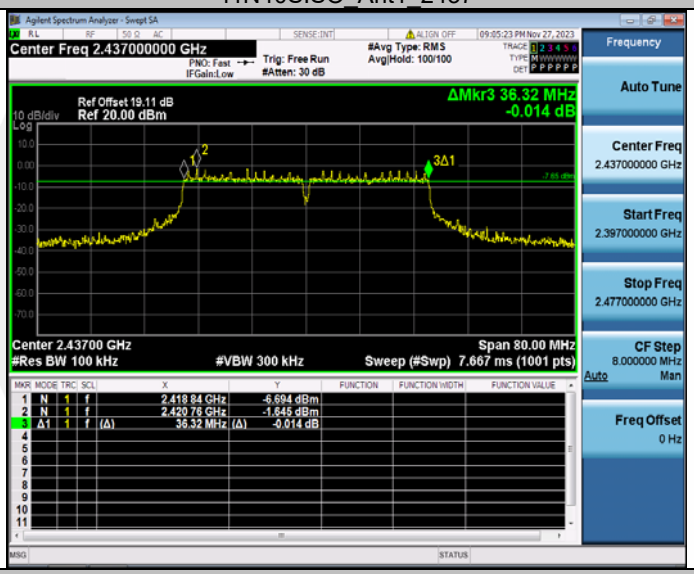

11N40SISO_Ant1_2452

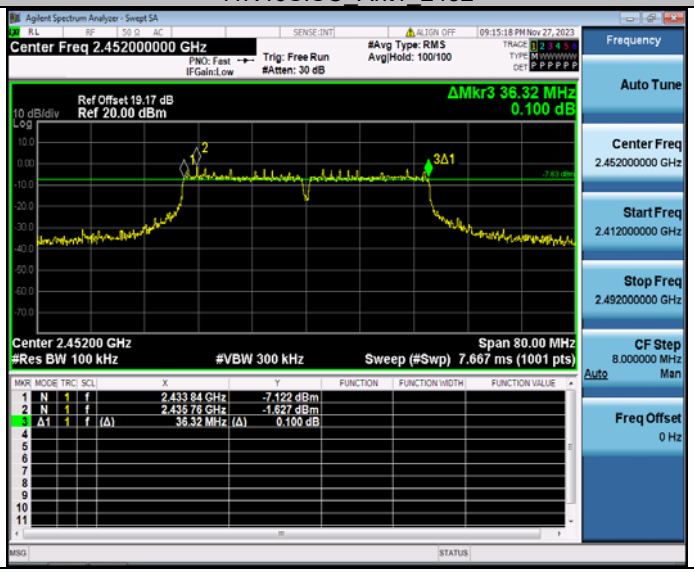

7.2 MAXIMUM PEAK CONDUCTED OUTPUT POWER

7.2.1 Applicable Standard

According to FCC Part15.247 (b)(3) and KDB 558074 D01 15.247 Meas Guidance v05r02

7.2.2 Conformance Limit

The maximum conducted output power of the intentional radiator for systems using digital modulation in the 2400 - 2483.5 MHz bands shall not exceed: 1 Watt (30dBm).

7.2.3 Test Configuration

Test according to clause 6.1 radio frequency test setup.

7.2.4 Test Procedure

a) Set span to at least 1.5 times the OBW.
b) Set RBW = 1-5% of the OBW, not to exceed 1 MHz.
c) Set VBW ≥ 3 x RBW.
d) Number of points in sweep ≥ 2 × span / RBW. (This gives bin-to-bin spacing ≤ RBW/2, so that narrowband signals are not lost between frequency bins.)
e) Sweep time = auto.
f) Detector = RMS (i.e., power averaging), if available. Otherwise, use sample detector mode.
g) If transmit duty cycle < 98 %, use a sweep trigger with the level set to enable triggering only on full power pulses. The transmitter shall operate at maximum power control level for the entire duration of every sweep. If the EUT transmits continuously (i.e., with no off intervals) or at duty cycle ≥ 98 %, and if each transmission is entirely at the maximum power control level, then the trigger shall be set to "free run".
h) Trace average at least 100 traces in power averaging (i.e., RMS) mode.
i) Compute power by integrating the spectrum across the OBW of the signal using the instrument's band power measurement function, with band limits set equal to the OBW band edges. If the instrument does not have a band power function, sum the spectrum levels (in power units) at intervals equal to the RBW extending across the entire OBW of the spectrum.

■ According to FCC Part 15.247(b)(4):
Conducted output power limit specified in paragraph (b) of this section is based on the use of antennas with directional gains that do not exceed 6 dBi. If transmitting antennas of directional gain greater than 6 dBi are used, the conducted output power from the intentional radiator shall be reduced below the stated values in paragraphs (b)(3) of this section, as appropriate, by the amount in dB that the directional gain of the antenna exceeds 6 dBi.
Note: If antenna Gain exceeds 6 dBi, then Output power Limit=30-(Gain- 6).

7.2.5 Test Results

Temperature :	25℃	ATM Pressure:	1011 mbar
Humidity :	60 %	Test Engineer:	XXH

TestMode	Antenna	Frequency[MHz]	Peak Powert[dBm]	Conducted Limit[dBm]	EIRP [dBm]	EIRP Limit[dBm]	Verdict
11B	Ant1	2412	15.26	≤30.00	18.66	≤36.00	PASS
		2437	14.85	≤30.00	18.25	≤36.00	PASS
		2462	14.49	≤30.00	17.89	≤36.00	PASS
11G	Ant1	2412	13.07	≤30.00	16.47	≤36.00	PASS
		2437	12.50	≤30.00	15.90	≤36.00	PASS
		2462	12.37	≤30.00	15.77	≤36.00	PASS
11N20SISO	Ant1	2412	12.80	≤30.00	16.20	≤36.00	PASS
		2437	12.21	≤30.00	15.61	≤36.00	PASS
		2462	12.02	≤30.00	15.42	≤36.00	PASS
11N40SISO	Ant1	2422	12.18	≤30.00	15.58	≤36.00	PASS
		2437	15.11	≤30.00	18.51	≤36.00	PASS
		2452	12.50	≤30.00	15.90	≤36.00	PASS

11B_Ant1_2412

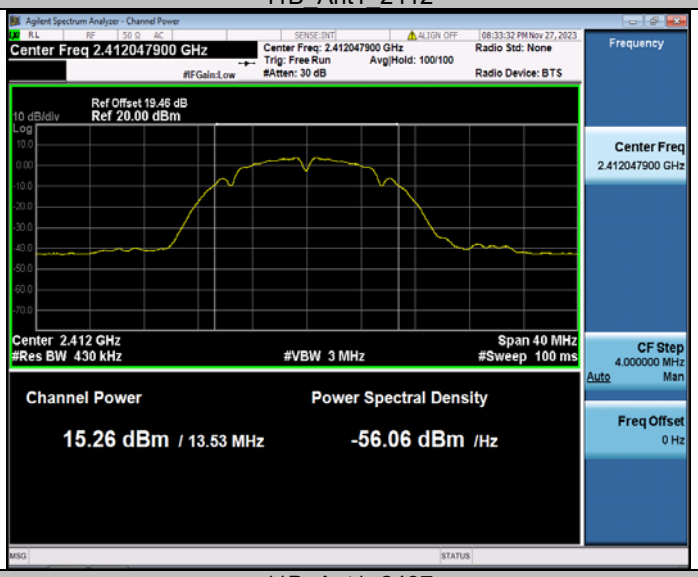

11B_Ant1_2437

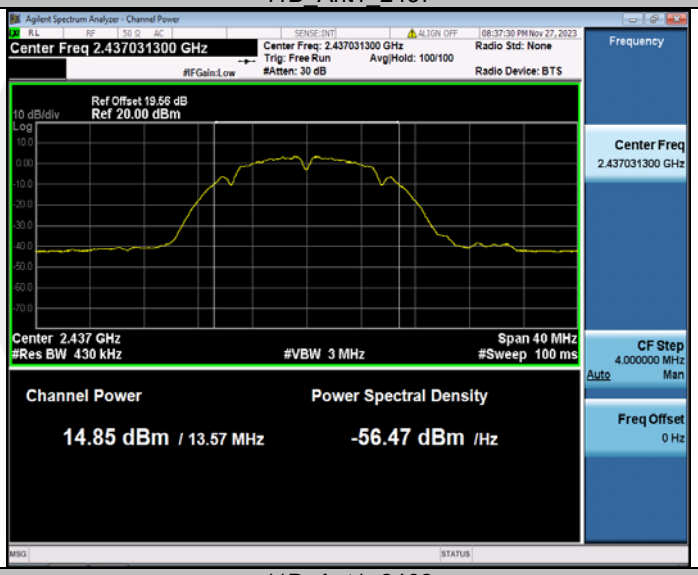
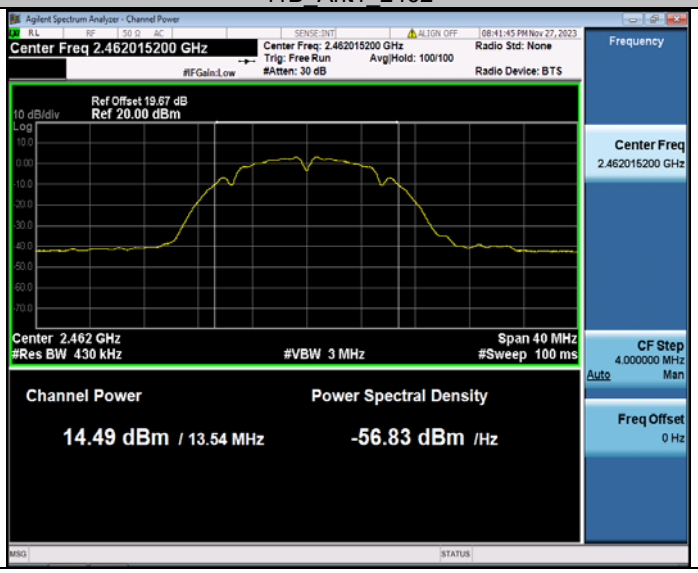
11B_Ant1_2462