承 认 书

SPECIFICATION FORAPPROVAL

客户名称 Customer Name	深度软件		
客户项目名 Customer Project Name	D16B	盛邦尔料号 Surbaner P/N	3160-180-00575
客户编码 Customer P/N	******	工作频段 Working Band	5150-5850MHz
产品描述 Description	5.8G antenna/Silk screen white: SUR-D16B-5.8G-V1.0/ Size: 21.35*16.67*0.12MM/ with 1.13 gray line 110mm (±3mm)		
版本号 Version	V01		
设计人信息/Designer Information			
射频工程师 RF Engineer	林德友	研发主管 R&D Diretor	朱浩奎
结构工程师 ME Engineer	邹荣凯		

盛邦尔审批/Surbaner Approval				客户批准/Customer Approval	
	制作 Prepared By	审核 Checked By	批准 Approval By	审核 Checked By	批准 Approval By
签章 Signature	刘胜荣				
日期 Date	2023.09.05				

修订履历/Change Log				
版本 Version	修订内容 Change Description	责任人 Personin Charge	核准 Approval By	日期 Date

地址：深圳市宝安区西乡街道鹤洲社区恒丰工业城 B25 栋 2 楼 TEL：0755-82790675 FAX：0755-82809726
Address: 2/F, Building B25, Hengfeng industrial city, Hezhou community, Xixiang Street, Baoan District, Shenzhen City.
SBR Communication has possession of proprietary information provided in this report and this proprietary information shall be kept in strict confidence and not disclosed to any person or firm without the prior written consent of SBR Communication Technology.

目录/Catalogue

序号 No.	项目 Item	页码 Page No.
1	图纸或实物图片 Drawing or Product Image	3
2	技术参数 Technical Parameter	4
3	射频性能测试报告 RF Performance Test Report	5-9
4	包装文件 Package Document	10
5	尺寸测量报告 Dimensions Test Report	11
6	可靠性测试报告 Reliability Test Report	12
7	环境有害物质管控一览表 RoHS Control list forSample	113
8	安装事宜或其它 Install Wizard or Other	13

SBR Communication has possession of proprietary information provided in this report and this proprietary information shall be kept in strict confidence and not disclosed to any person or firm without the prior written consent of SBR Communication Technology.

一. 产品图纸或实物图片/DrawingorProduct Image

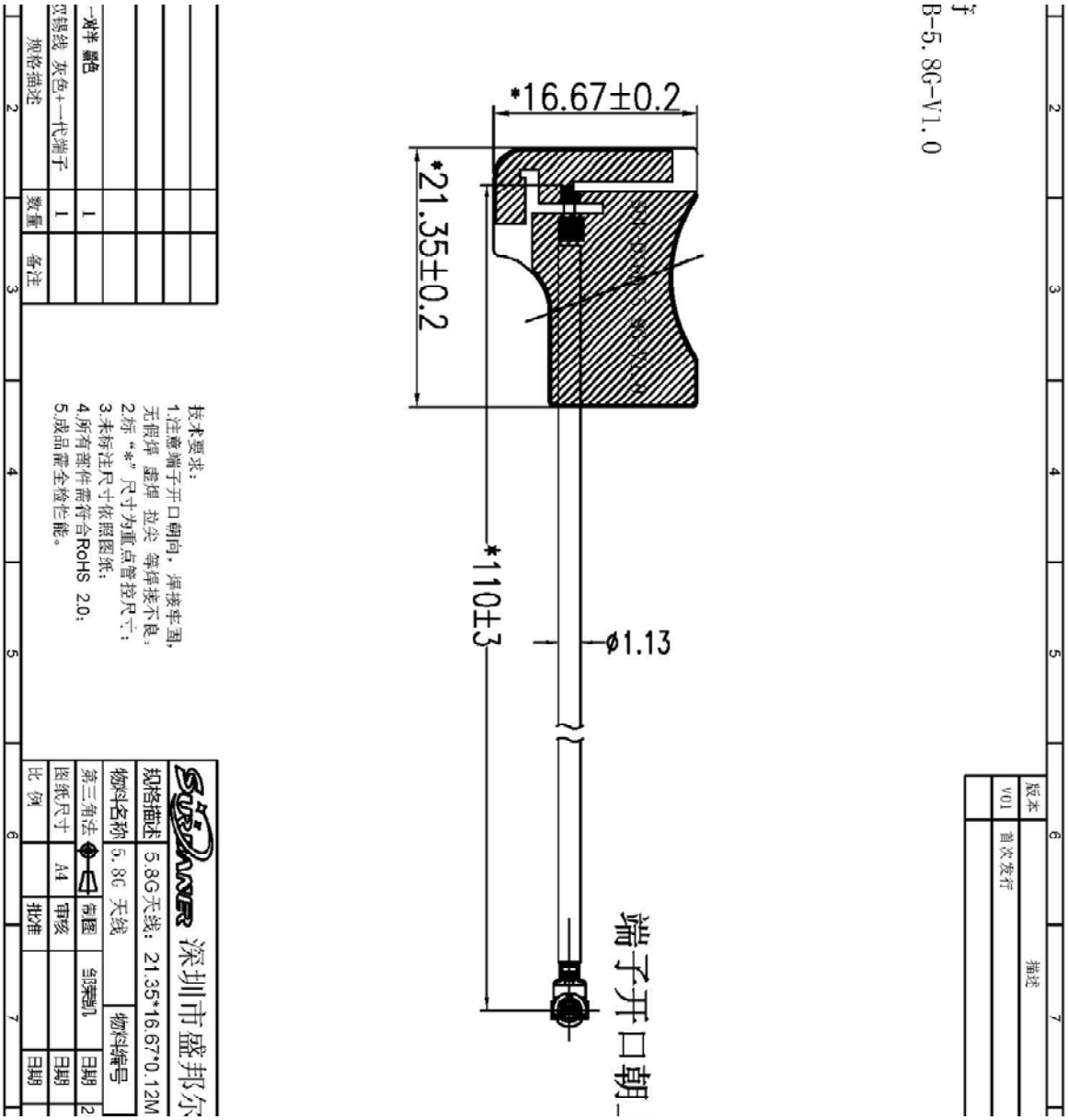

二. **Technical Parameter /技术参数**

1.Antenna/天线		
No/序号	**Part Name/项目**	**SPEC/规格**
1	Frequency Range/ 频率范围	5150-5850MHz

SBR Communication has possession of proprietary information provided in this report and this proprietary information shall be kept in strict confidence and not disclosed to any person or firm without the prior written consent of SBR Communication Technology.

2	Impendence/阻抗	50 ohm nominal
3	Gain/增益	6.2dBi（at 5720MHz）
4	Polarization/极化	LINE
5	VSWR/驻波比	＜3.5
6	Efficiency/效率	≥40%
7	RF Cable/射频连接线	1.13 线 110mm
8	RF Connector/连接器	1 代端子

2. Environmental Characteristics/环境特性

No/序号	Part Name/项目	SPEC/规格
1	Operation Humidity /工作湿度	5~95%不冷凝
2	Operating Temperature/ 工作温度	-20~+60℃
3	Store Temperatuer/储存温度	-30~+70℃

射频性能测量报告

RF Performance Test Report

客户名称 Customer Name	深度软件	项目名称 Project Name	D16B	盛邦尔料号 Surbaner P/N	3160-180-00575
频段 Band	5150-5850MHz	测试日期 Test Date	2023/08/26	测试人 Inspector	林德友

SBR Communication has possession of proprietary information provided in this report and this proprietary information shall be kept in strict confidence and not disclosed to any person or firm without the prior written consent of SBR Communication Technology.

天线测试设备简介

Antenna Test Equipment Introduction

测试天线输入特性使用 **Agilent E5071C and Agilent 5062A** 矢量网络分析仪；辐射特性利用 Satimo 三维近场暗室进行测试，并分别使用 8960 E5515 和 Agilent E4438C 进行了分析。暗房的测试坐标如下:

Test of antenna input characteristics using **Agilent E5071C and Agilent 5062A** vector network analyzer; The radiation pattern of the antenna are tested using the Satimostarlab3D near fieldAnechoic Chamber, and the instrument is used to agilent8960 E5515 and Agilent E4438C. The test coordinates of the darkroom are as follows:

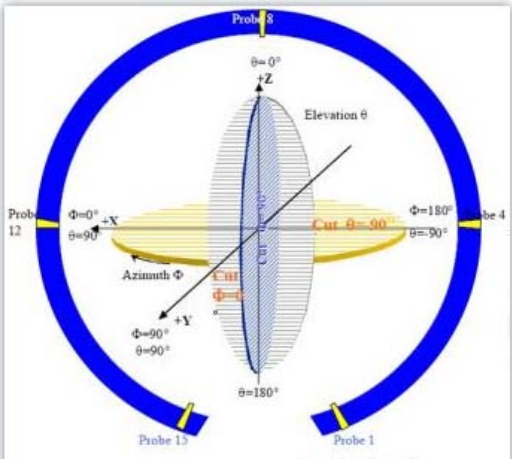

图 4 3D 微波暗室测试坐标系(back view)

1. S11 参数测量/*S11 Parameter-VSWR*

使用一根 50Ω 同轴电缆连接到天线，然后该电缆连接到网络分析仪测量 S11 参数，被测量产品远离金属至少 20 厘米。

MeasuringMethod is a 50Ω coaxial cable is connected to the antenna. Then this cable isconnected to a networkanalyzer to measure the S11 parameter, Keeping this fixture away from metal at least 20cm.

SBR Communication has possession of proprietary information provided in this report and this proprietary information shall be kept in strict confidence and not disclosed to any person or firm without the prior written consent of SBR Communication Technology.

Product Overview & Dimension

WiFi 5.8G

BT

Test System

Sequence Number	Test Item	equipment
S parameter	VSWR	Agilent 5071C & Agilent 5062A
OTA Test	TRP&TIS	Agilent 8960 E5515C& Agilent 4438C&CMW500 &CMW270 ETS&SATIMO
Gain & Efficiency	Gain & Efficiency	ETS&SATIMO Agilent 5071C

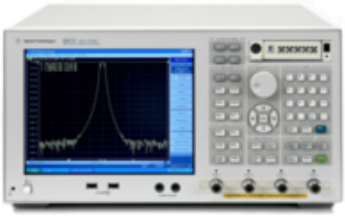

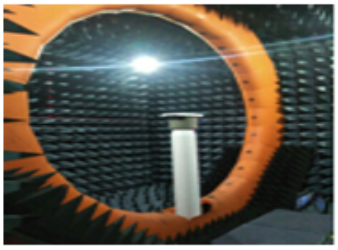

SBR Communication has possession of proprietary information provided in this report and this proprietary information shall be kept in strict confidence and not disclosed to any person or firm without the prior written consent of SBR Communication Technology.

S11 Parameter

Frequency(MHz)	5150	5580	5850
VSWR	3.18	2.33	2.73

2. 天线匹配网络/**Antenna Matching Network**

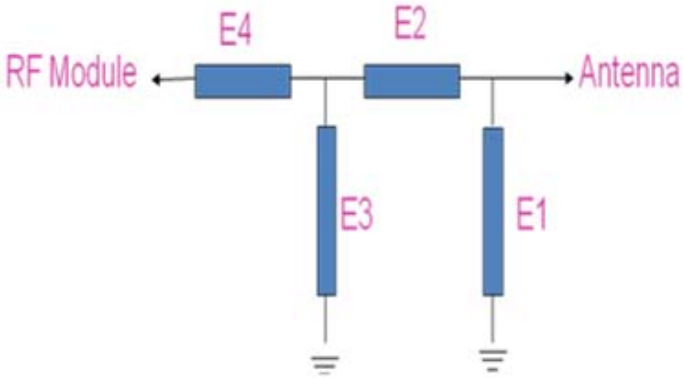

Element	Capacitor	Inductor
E1	N/A	N/A
E2	N/A	N/A
E3	N/A	N/A
E4	N/A	N/A

SBR Communication has possession of proprietary information provided in this report and this proprietary information shall be kept in strict confidence and not disclosed to any person or firm without the prior written consent of SBR Communication Technology.

PCB板端匹配电路未改动

2D Pattern

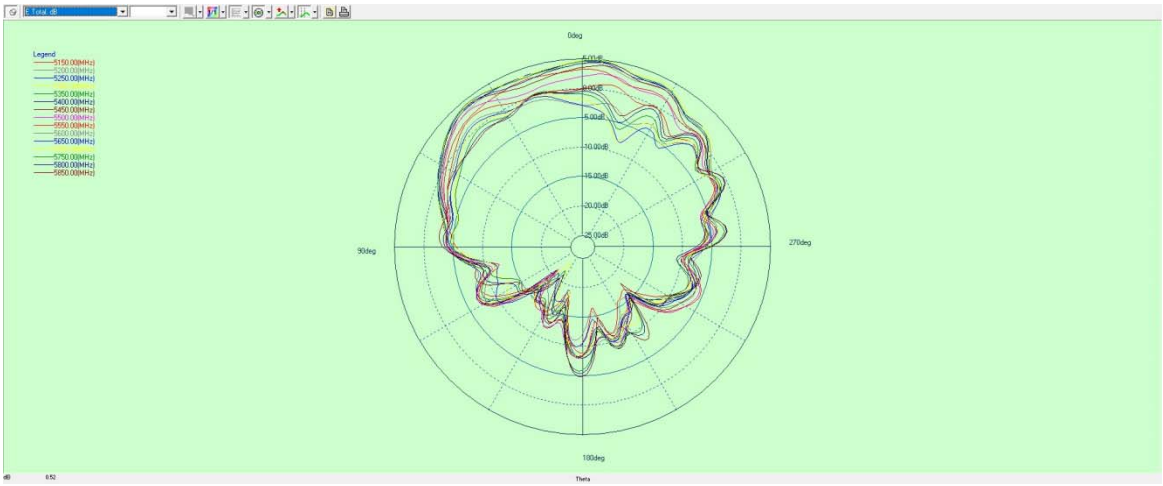

Phi =0

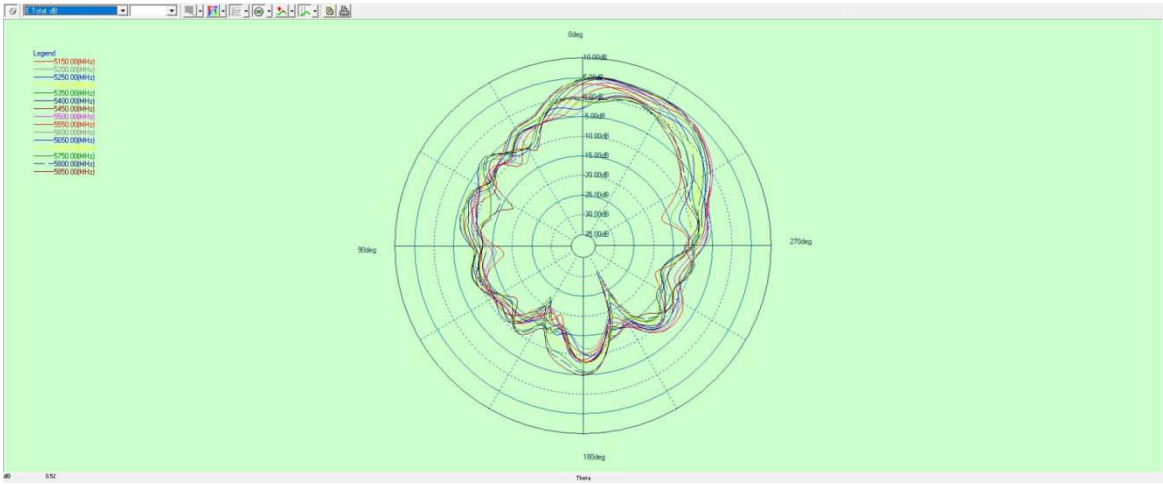

Phi =90

SBR Communication has possession of proprietary information provided in this report and this proprietary information shall be kept in strict confidence and not disclosed to any person or firm without the prior written consent of SBR Communication Technology.

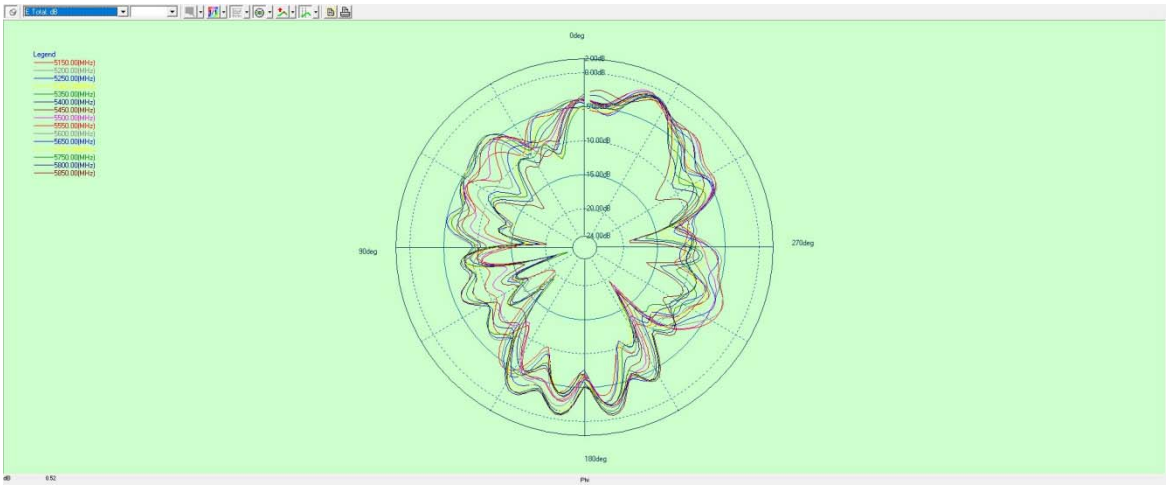

Theta =90

3.Gain & Efficiency

Frequency (MHz)	Efficiency (%)	Peak GAIN (dBi)
5150	43. 5%	4. 5
5350	52. 9%	5. 7
5720	41. 6%	6. 2
5850	42. 1%	5. 3

SBR Communication has possession of proprietary information provided in this report and this proprietary information shall be kept in strict confidence and not disclosed to any person or firm without the prior written consent of SBR Communication Technology.

产品包装规范

Product packaging specifications

产品包装规范

page: 1 of 1

项目名：D16B	版本：A
客户：蓝博智能	成品名称：WIFI 天线

一：成品天线

二：每PE袋装50PCS产品(以实际包装为准)。

三：每10袋装一大袋，(以实际包装为准)。

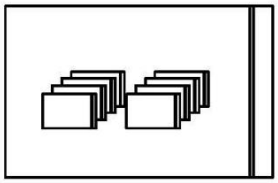

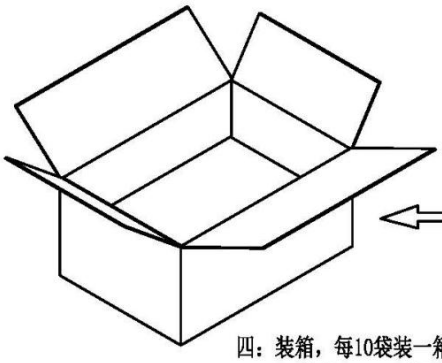

四：装箱，每10袋装一箱，
一箱共5000PCS产品(以实际包装为准)。

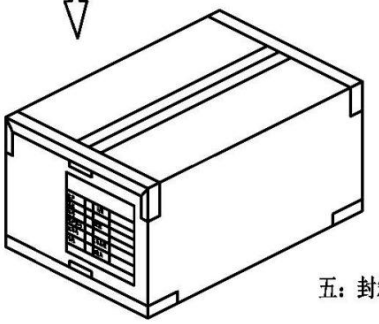

五：封箱，外箱贴我司生产标签和ROHS标签。

批准：_____ 确认：_____ 拟制：邹荣凯

地址：深圳市宝安区西乡街道鹤洲社区恒丰工业城 B25 栋 2 楼 TEL：0755-82790675 FAX：0755-82809726
Address: 2/F, Building B25, Hengfeng industrial city, Hezhou community, Xixiang Street, Baoan District, Shenzhen City.

SBR Communication has possession of proprietary information provided in this report and this proprietary information shall be kept in strict confidence and not disclosed to any person or firm without the prior written consent of SBR Communication Technology.

深圳市盛邦尔科技有限公司
Shenzhen Surbaner Technology CO.,LTD.

样品尺寸测量报告

Sample Dimensions Test Report

客户名称 Customer Name	深度软件	客户料号 Customer P/N	******	盛邦尔料号 Surbaner P/N	3160-180-00575
测试日期 Test Date	2023/09/05	样品数量 Sample Qty.	3	测试人 Inspector	曾心荣
尺寸编号 Dimension No.	标准 Standard	样品 1 Sample1	样品 2 Sample2	样品 3 Sample3	Pass/NG
①长度	21.35±0.2mm	21.37	21.35	21.32	Pass
②宽度	17.92±0.2mm	17.94	17.92	17.90	Pass
③厚度	0.12±0.05mm	0.12	0.13	0.12	Pass
④线长	110±3mm	111	110	109	Pass
⑤					
⑥					
⑦					
⑧					
最终结论 Conclusion					PASS
测试人&日期 Inspector & Date	曾心荣 2023/09/05		批准&日期 Approval &Date		

地址：深圳市宝安区西乡街道鹤洲社区恒丰工业城 B25 栋 2 楼 TEL：0755-82790675 FAX：0755-82809726
Address: 2/F, Building B25, Hengfeng industrial city, Hezhou community, Xixiang Street, Baoan District, Shenzhen City.
SBR Communication has possession of proprietary information provided in this report and this proprietary information shall be kept in strict confidence and not disclosed to any person or firm without the prior written consent of SBR Communication Technology.
www.surbaner.com.cn

可靠性测试报告

Reliability Test Report

客户名称 Customer Name	深度软件	客户料号 Customer P/N	******	盛邦尔料号 Surbaner P/N	3160-180-00575	
测试日期 Test Date	2023/09/04	样品数量 Sample Qty.	3	测试人 Inspector	何春辉	
测试项目 Test Item	要求 Requirement	试验设备 testing equipment	样品 1 Sample1	样品 2 Sample2	样品 3 Sample3	判定 PASS/NG
高温存储	在+70℃条件下暴露 24H，恢复 2H 后进行测试电气性能正常	恒温恒湿箱	OK	OK	OK	Pass
低温存储	在-30℃条件下暴露 24H，恢复 2H 后进行测试电气性能正常	恒温恒湿箱	OK	OK	OK	Pass
高温工作	在+60℃条件下通电工作 24H 电气性能正常	恒温恒湿箱	OK	OK	OK	Pass
低温工作	在-20℃条件下通电工作 24H 电气性能正常	恒温恒湿箱	OK	OK	OK	Pass
端子盐雾试验	(5±0.5)%氯化钠、pH 值为 6.5～7.2，实验箱温度(35±2)℃ ☑24H ☐48H	盐雾试验机	OK	OK	OK	Pass
端子铆压拉拔力	1.13 线径接 1 代 IPEX ≥10N	推拉力计	14N	15N	17N	Pass
最终结论 Conclusion						Pass
测试人&日期 Inspector & Date	何春辉 2023/09/05		批准&日期 Approval &Date			

地址：深圳市宝安区西乡街道鹤洲社区恒丰工业城 B25 栋 2 楼 TEL：0755-82790675 FAX：0755-82809726
Address: 2/F, Building B25, Hengfeng industrial city, Hezhou community, Xixiang Street, Baoan District, Shenzhen City.

SBR Communication has possession of proprietary information provided in this report and this proprietary information shall be kept in strict confidence and not disclosed to any person or firm without the prior written consent of SBR Communication Technology.

产品 ROHS 成分宣告表

产品名称	均匀物质材料		有害物质含量（PPM）										HS 测试报告编号	HS 测试报告日期
			Pb	Cd	Hg	Cr6+	PBBs	PBDEs	DEHP	BBP	DBP	DIBP		
WIFI 天线	FPC	文字油墨	ND	ND	ND	ND	ND	ND	ND	ND	ND	ND	ETR22A01347M01	22/10/17
		3M 胶	ND	ND	ND	ND	ND	ND	ND	ND	ND	ND	SHAEC2217569205	23/1/4
		金手指	ND	ND	ND	ND	ND	ND	ND	ND	ND	ND	A2220464569184001E	22/12/6
		基材	ND	ND	ND	ND	ND	ND	ND	ND	ND	ND	SHAEC23001049106	23/2/15
		防焊油墨	ND	ND	ND	ND	ND	ND	ND	ND	ND	ND	ETR22705905	22/8/5
		抗氧剂	ND	ND	ND	ND	ND	ND	ND	ND	ND	ND	SZXEC23000119402	23/2/27
		文字油墨	ND	ND	ND	ND	ND	ND	ND	ND	ND	ND	ETR22A01347M01	22/10/17
	线材	氟化物	ND	ND	ND	ND	ND	ND	ND	ND	ND	ND	NGBMR23000169901	23/2/6
		镀锡铜线	ND	ND	ND	ND	ND	ND	ND	ND	ND	ND	SHAEC23010829308	23/7/26
		灰色色母	ND	ND	ND	ND	ND	ND	ND	ND	ND	ND	A2230222421101003C	23/5/23
	端子	C5210	ND	ND	ND	ND	ND	ND	ND	ND	ND	ND	CANEC2301145810	23/2/8
		塑胶	ND	ND	ND	ND	ND	ND	ND	ND	ND	ND	ETR23705937	23/8/4
		镀金	ND	ND	ND	ND	ND	ND	ND	ND	ND	ND	A2220404860101001C	22/9/17

安装事宜或其它

Install Wizard or Other

Installation process:

Take 1PCS of products, tear off the release paper on the back of the FPC by hand, then align the positioning hole of the FPC with the positioning hole of the shell (positioning rib or positioning line), and smoothly attach to the shell, as shown in the figure below:

Precautions during installation:

☑ After pasting the antenna, ensure that the FPC is fully attached to the shell;

☑ The positioning hole is aligned with the positioning column of the housing;

☑ Align the FPC edge with the shell edge

☑ Antenna with terminals align the terminals first when connecting the terminals to the PCBA end of the mainboard, and then connect the terminals vertically;

☑ When removing antenna terminals, use a tool (such as a dedicated crowbar) to lift the terminals vertically. Do not pull the cables to remove them.

SBR Communication has possession of proprietary information provided in this report and this proprietary information shall be kept in strict confidence and not disclosed to any person or firm without the prior written consent of SBR Communication Technology.