Dongguan Lixinwei Electronics Co., Ltd.

Antenna Specifications Approval

Antenna Specification for Approval

Customer Name : Lefei Electronics

Product Name : 2.4G copper tube antenna, full length 143, black

Product Name:

Part NO.: C113H-HT26T-147

Write By : Zhou Min

Issued Date: 2017-01-05

梓暮	揭杅	載蜊囀□	□趼	□□

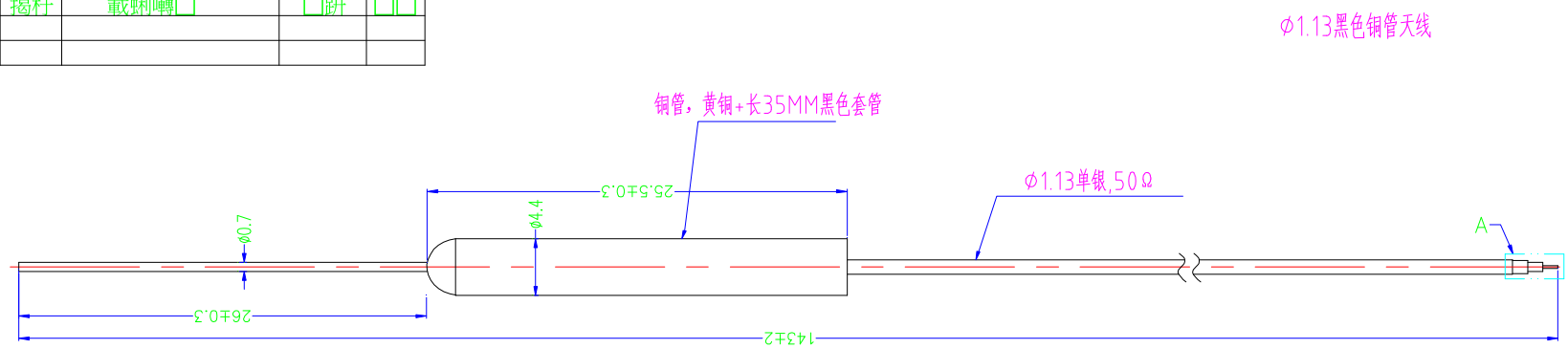

规格说明：

1.频率范围：2.4GHz-2.5GHz；

2.功率增益：2.0dBi。

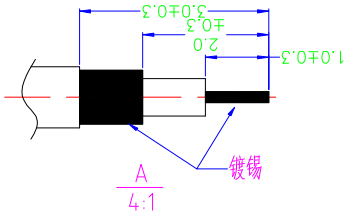

TITLE: 靡備		MATERIAL: 第蹋	FINISH: Stewed in a bucket
PART/NO.: 錨璃唔瘍	C113H-HT26T-143	TOLERANCE Rat Ship	
UNIT IN 等弇 mm	SCALE: 掀瞰 2.5:1	LINEAR 盄俶 L<30——±0.10 30<L<100-±0.15 L>100——±0.20	ANGULAR 褒僅 X.XX-±0.1° X.X ±0.2°
		UNLESS OTHERWISE SPECIFIED	
DRWING 秶芞 敦	DATE □□ 16-12-25	CHECKING 机芞	DATE □□ REV 唳棒 01

Product Specification

A. Electrical Characteristics

Frequency 2400MHz ~2500MHz

VSWR <2.0

Efficiency >70%

Impedance 50 Ohm

Polarization Line

Gain 2DBi

B. Material & Mechanical Characteristics

Material of Radiator Cu

Cable Type 1.13 黑色

Connector Type : NO

Dimension

C. Environmental

Operation Temperature - 30 °C ~ + 80 °C

Storage Temperature - 30 °C ~ + 85 °C

Test Equipment & Conditions

1. Network Analyzers :

Agilent 8753D 5071B

2. Communications Test Set:

Agilent E5515C

3. 3D Chamber Test System

Effiency &Gain

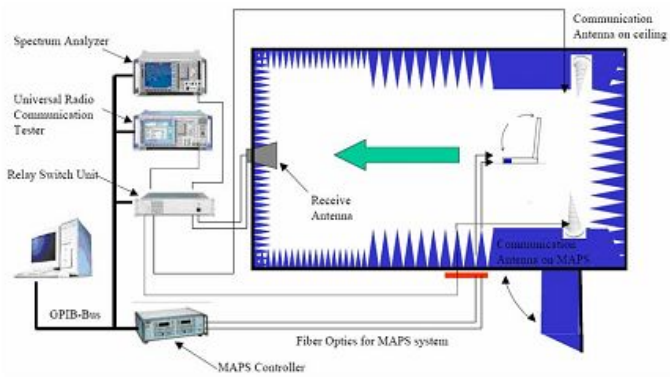

(Testing by 3D anechoic chamber)

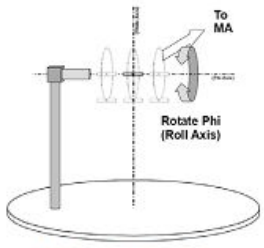

Phi axis test

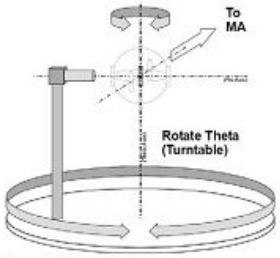

Theta axis test

Effiency &Gain

Freq Effi Gain

(MHz)	(%%)	(dBi)
2400	76.92	2.8
2410	75.12	2.88
2420	73.34	2.7
2430	72.57	2.99
2440	66.67	2.61
2450	71.03	2.83
2460	70.83	2.82
2470	71.95	2.89
2480	72.28	2.68
2490	68.19	2.62
2500	67.42	2.03

S11

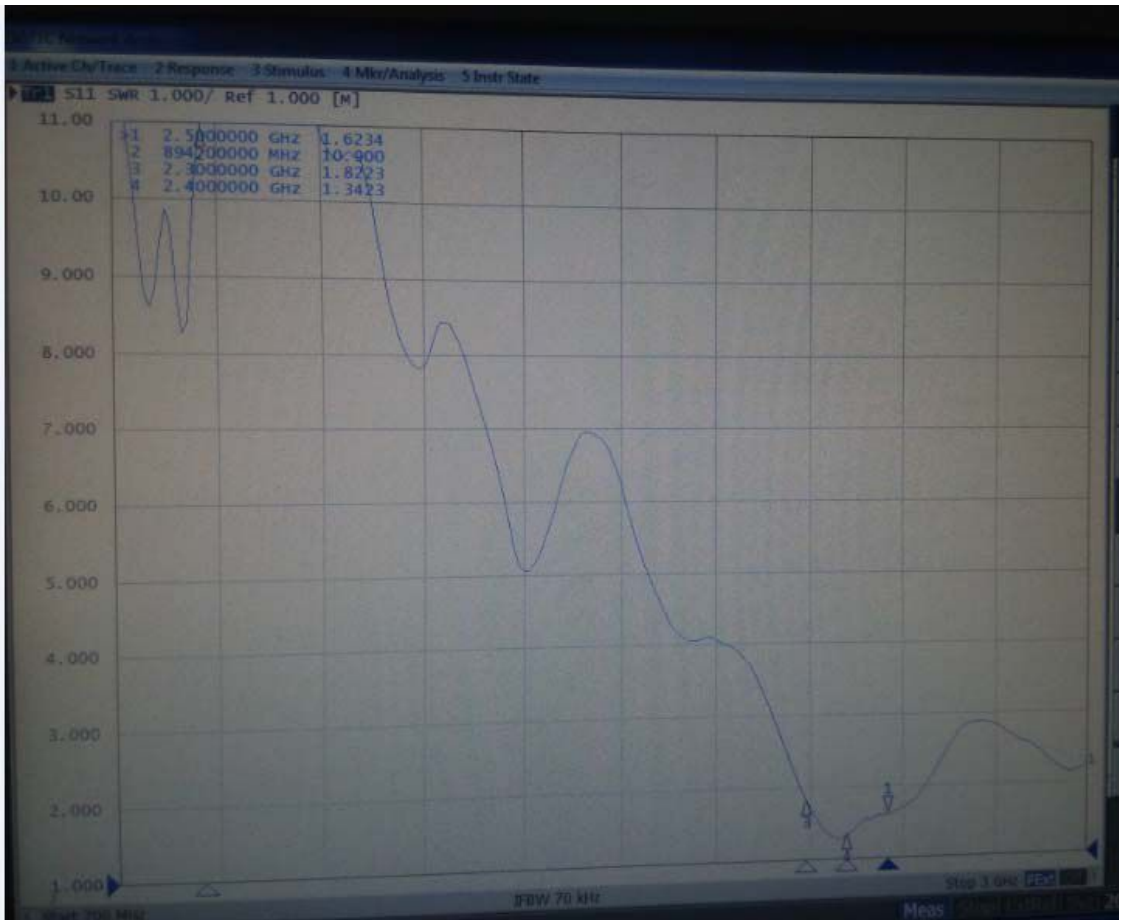

Radiation Pattern:

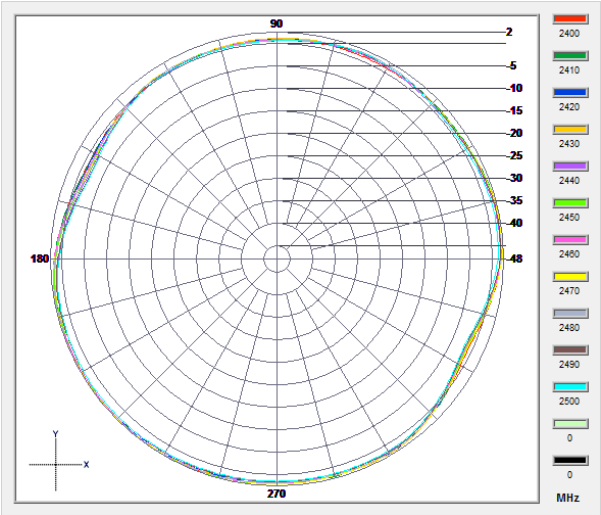

XY

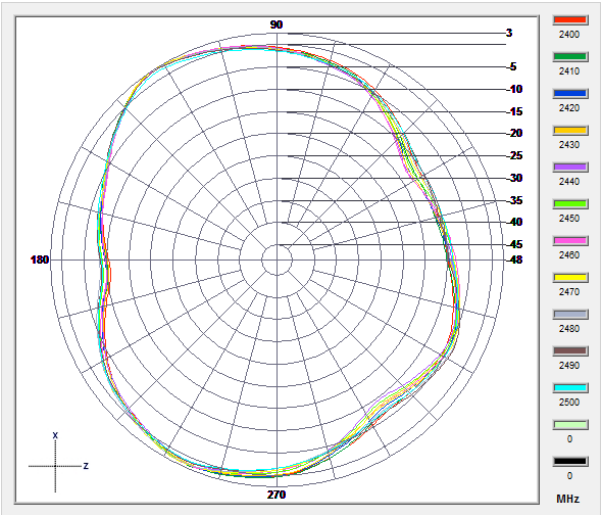

XZ

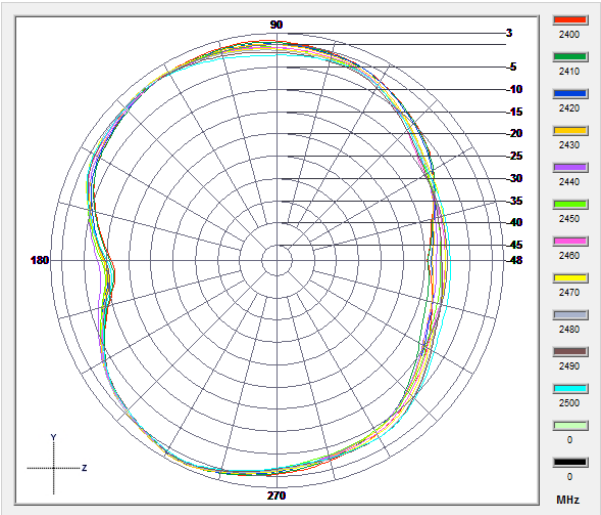

YZ

2400 2410 2420 2430 2440 2450 2460 2470 2480 2490 2500

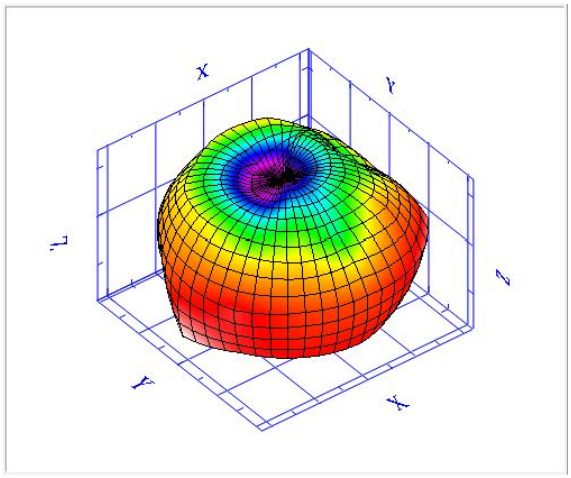

2.82 -0.22 -3.26 -6.3 -9.34 -12.37 -15.41 -18.45 -21.49

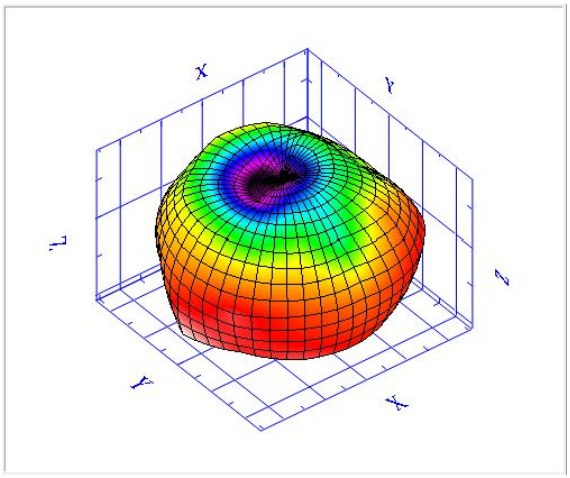

2.89 -0.64 -4.18 -7.71 -11.24 -14.77 -18.31 -21.84 -25.37

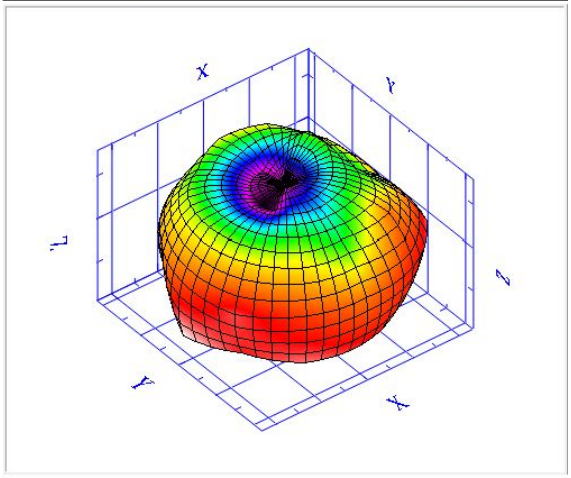

2.7 -0.49 -3.68 -6.87 -10.07 -13.26 -16.45 -19.64 -22.83

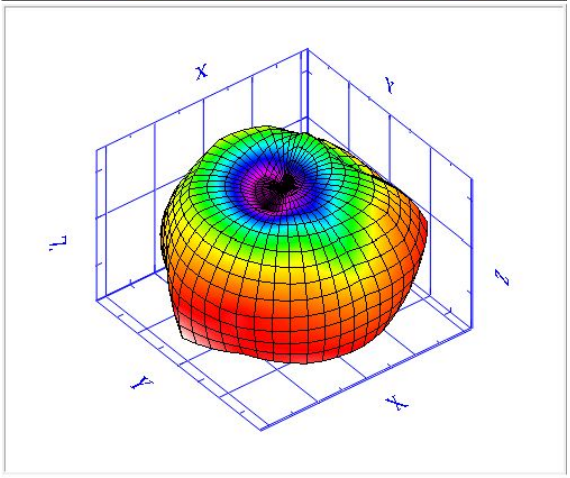

3 -0.04 -3.08 -6.12 -9.15 -12.19 -15.23 -18.27 -21.31

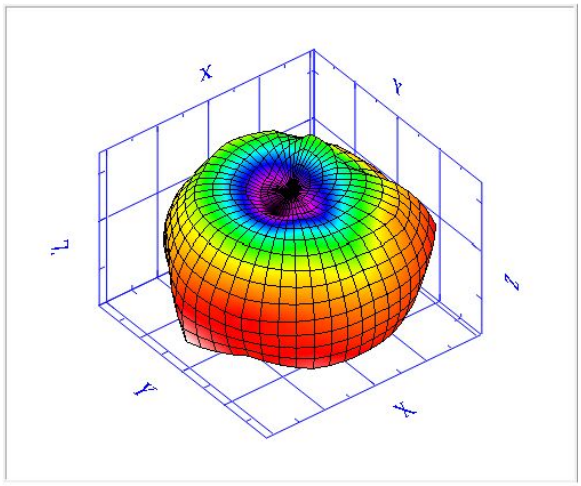

2.63 -0.35 -3.32 -6.3 -9.27 -12.25 -15.22 -18.19 -21.17

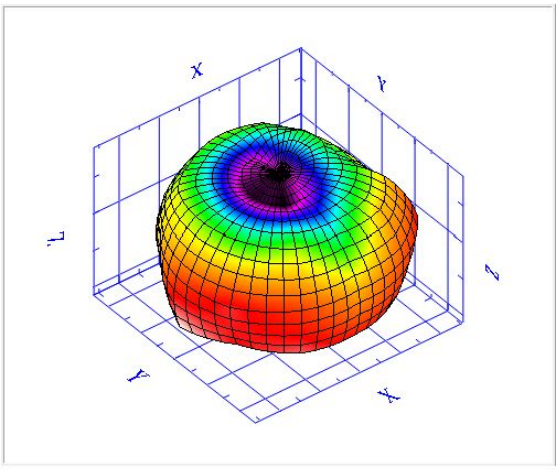

2.84 -0.75 -4.34 -7.93 -11.52 -15.11 -18.7 -22.29 -25.88

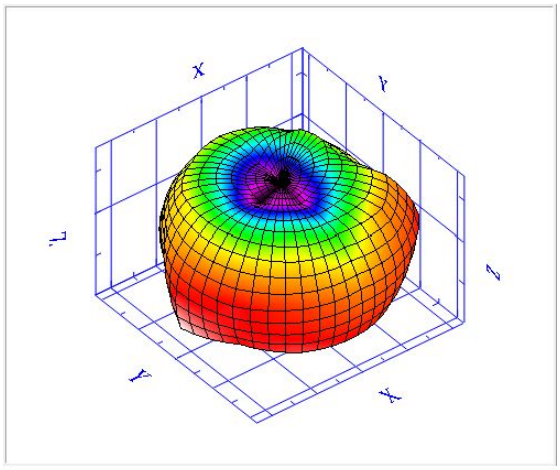
X
Y
Z
2.83 -0.39 -3.6 -6.82 -10.03 -13.25 -16.46 -19.67 -22.89

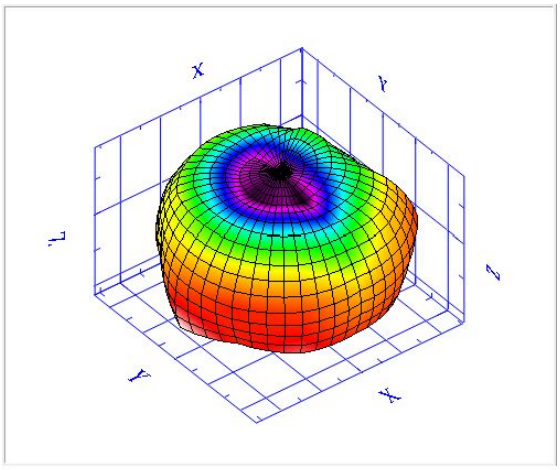
X
Y
Z
2.9 -0.72 -4.34 -7.97 -11.59 -15.21 -18.83 -22.46 -26.08

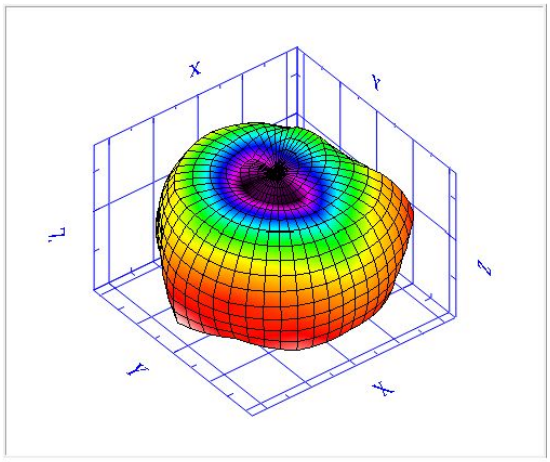
X
Y
Z
2.7 -0.52 -3.73 -6.95 -10.17 -13.38 -16.6 -19.81 -23.03

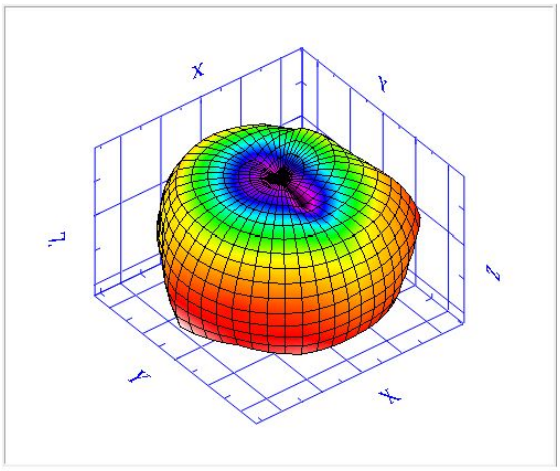
X
Y
Z
2.65 -0.96 -4.62 -8.25 -11.89 -15.52 -19.16 -22.79 -26.42

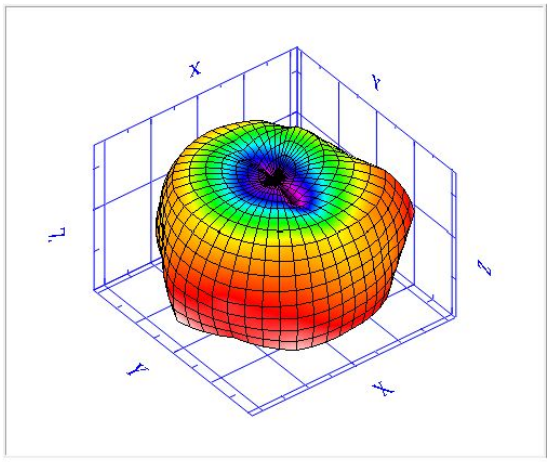
X
Y
Z
2.04 -1.03 -4.11 -7.18 -10.25 -13.33 -16.4 -19.47 -22.55