RKB1126 SPECIFICATION

Version	Content
Ver1.0	1st Edition

Shanghai Silicium Microelectronics Co., Ltd.

Table of Contents

1. Overview 2
2. System Functino and working principle 2
3. System Framework 2
4. Technical Specifications（25℃） 3
5. Interface Information 3
6. Physical Structure and Dimensions (Unit: mm) 4
7. Communication Protocol 4
8. Technical Requirements 5
9. Antenna Specification 5-8
10. Packaging and Storage 9

 Copyright © SGR Semiconductors Inc.

1. Overview

The RKB1126 is an IoT radar module based on the 24G radar chip SRK1101 designed by Shanghai Silicium Microelectronics. It can be applied in IoT fields such as home appliances, lighting, and industrial applications.

2. System Function and Working Principle

This system utilizes the Doppler effect of electromagnetic waves to detect moving objects. The transmitting antenna emits a 24GHz electromagnetic wave signal, which reflects off moving objects and returns with a frequency shift, known as the Doppler shift. The reflected signal is received by the receiving antenna. By analyzing the Doppler shift and the intermediate frequency IQ phase, the system can sensitively detect nearby moving objects and determine whether they are approaching or moving away. When a moving object is detected approaching, the VO output goes high; when no moving object is detected, the VO output goes low.

3. System Framework

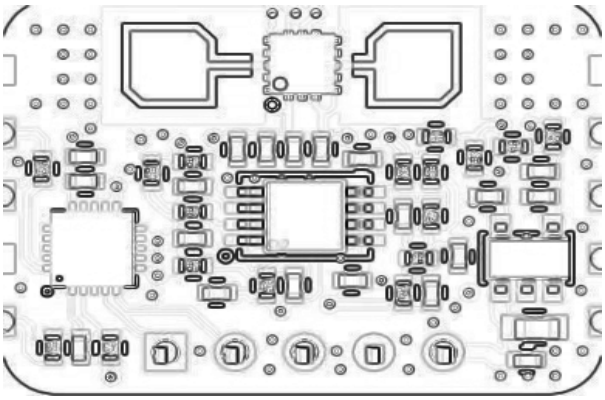

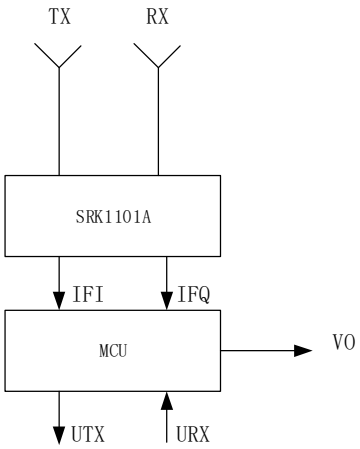

 Copyright © SGR Semiconductors Inc.

4. Technical Specifications（25℃）

Parameter	Min	Typical	Max	Unit	Test Condition
Supply Voltage	3.6	5	5.5	V	
Supply Current		65		mA	@5V
Transmit Equivalent Radiated Power		5		dBm	
Transmit Antenna Half-Power Beamwidth		106		ºC	Horizontal
		106		ºC	Vertical
Receive Antenna Half-Power Beamwidth		94		ºC	Horizontal
		48		ºC	Vertical

5. Interface Information

The interface is available in two forms: pin headers and stamp holes. The pin numbers are shown in the figure below。

Pin Header			Stamp Hole		
Pin	Name	Description	Pin	Name	Description
1	UART_TX	Serial TX 3.3V	1	VCC_MCU	+3.3V Power
2	UART_RX	Serial RX3.3V	2	GND	Ground
3	VO	Output IO	3	SWDIO	Programming Port
4	GND	Ground	4	SWCLK	Programming Port
5	VCC	+5V Power	5	GND	Ground
			6	VCC	+5V Power
			7	VO	Output IO
			8	UART_RX	Serial RX 3.3V
			9	UART_TX	Serial RX 3.3V
			10	GND	Ground

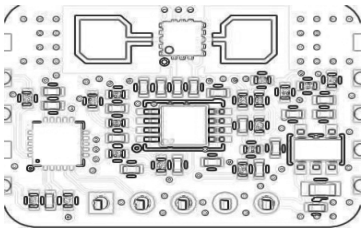

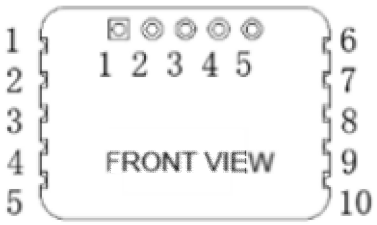

 Copyright © SGR Semiconductors Inc.

6. Physical Structure and Dimensions (Unit: mm)

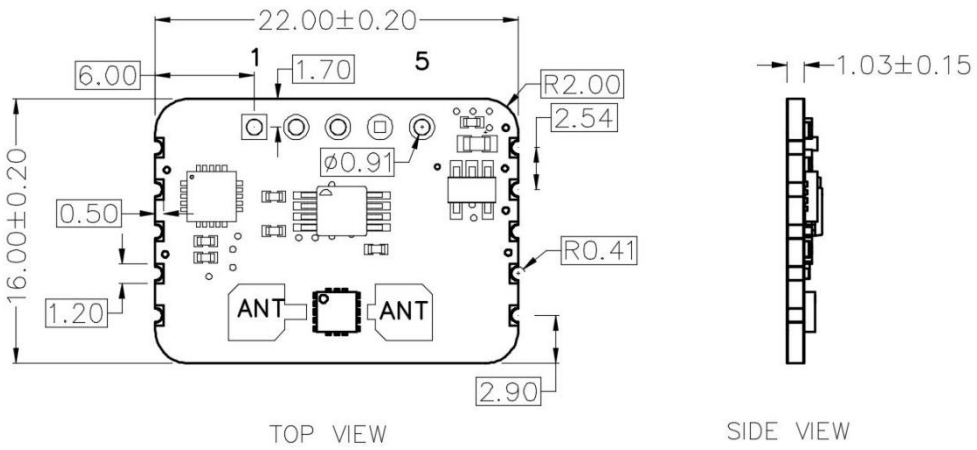

Recommended Pad Dimensions:

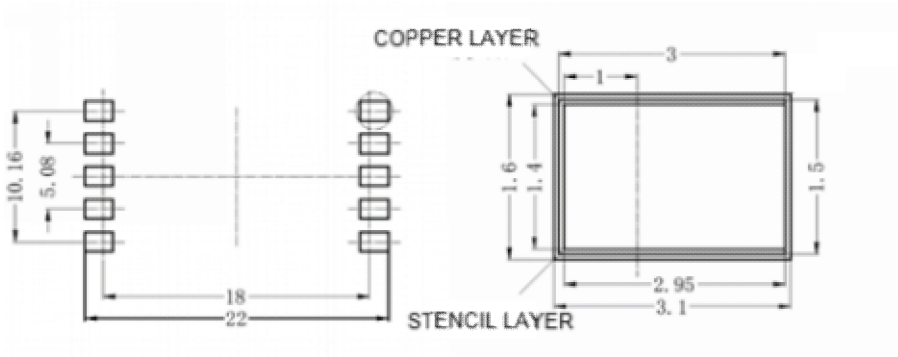

7. Communication Protocol

7.1. UART Protocol Support

- Baud Rate: 115200
- Data Bits: 8
- Stop Bits: 1
- Parity: None

 Copyright © SGR Semiconductors Inc.

8. Technical Requirements

8.1. Environmental and Environmental Protection Requirements

（1）Temperature and Humidity Requirements

Item	Operating Environment
Temperature Range	-40~55℃
Relative Humidity Range	0~85%RH

（2）Altitude Requirements：None。

（3）Environmental Protection Requirements：Complies with "China RoHS Certification" requirements。

8.2. Installation Special Requirements

The radar should not be obstructed by metal panels in front of it.

9. Antenna Specification

9.1. Antenna Type

Antenna Model: RKB1126 Patch antenna, operating frequency band: 24 GHz–24.25 GHz, as below shown :

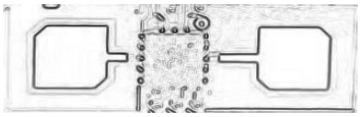

Manufacturer : 5th Floor, B3 South Building, Jiakangyuan, No. 333 Huangqing Road, Jiading District, Shanghai

 Copyright © SGR Semiconductors Inc.

9.2. Return Loss

Return loss, as below shown :

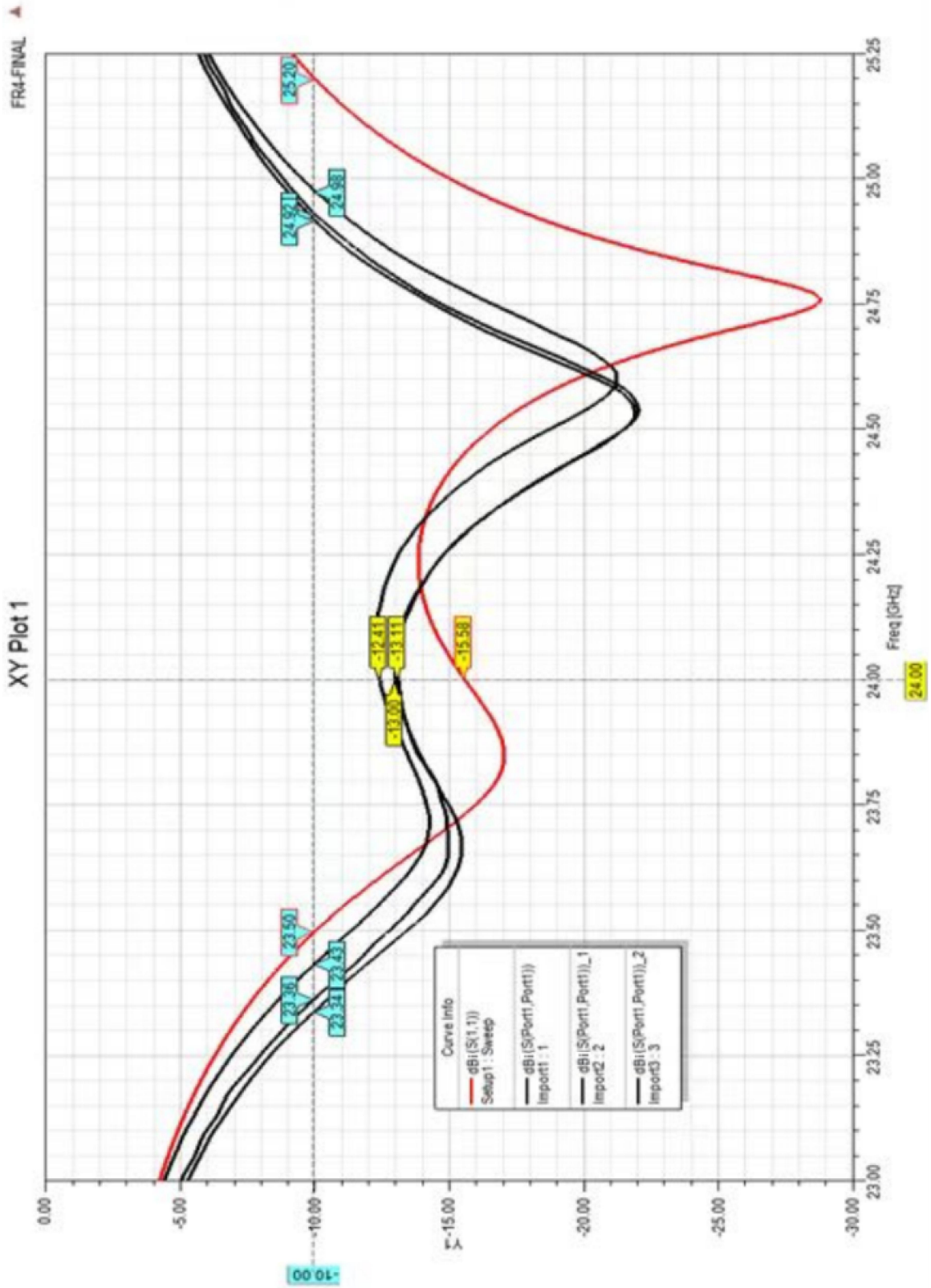

9.3. Transmit antenna gain

Transmit antenna gain, as below shown :

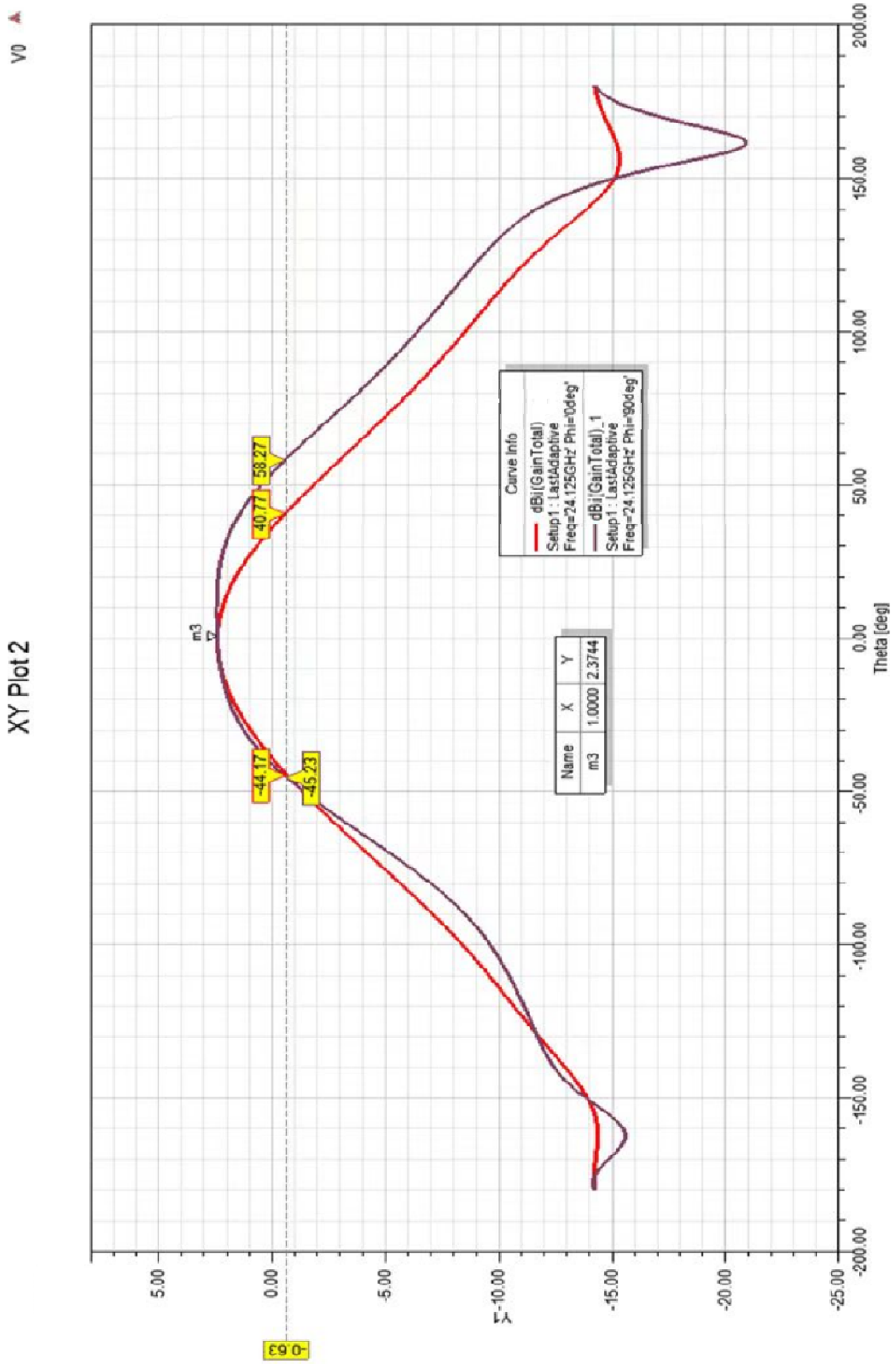

9.4. Direction Diagram

Direction Diagram, Gain relative to an isotropic antenna, unit: dBi, as below shown :

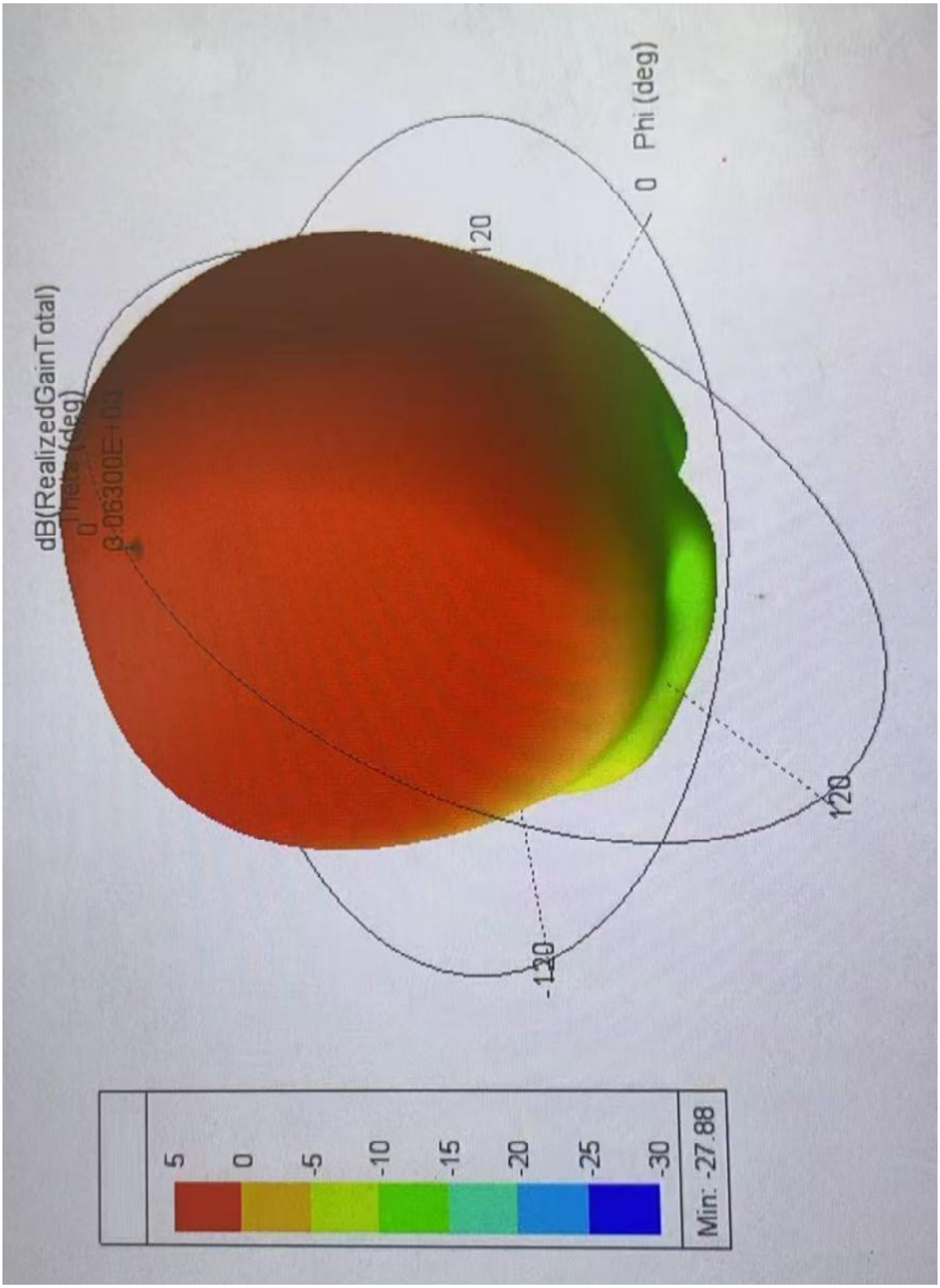

10. Packaging and Storage

10.1. Packaging

Each outer package should be labeled with the following information: manufacturer's product model, product name, quantity, manufacturer's batch number, production date, and manufacturer.

The inner and outer packaging should be intact, and the components should not be loose.

10.2. Transportation

The packaged products can be transported by any means of transportation. During transportation, avoid collisions, severe vibrations, rain, snow, and water immersion. During transit, the products should not be stored in open warehouses. After transportation, the products should not have any damage or performance degradation.

10.3. Storage

The products should be stored in a clean, dry, and well-ventilated environment.

The maximum storage period is one year. The storage warehouse temperature should be between -40° C and 55° C, with relative humidity not exceeding 85%.

 Copyright © SGR Semiconductors Inc.