M2 Pro 3-axis

Quick Start Guide

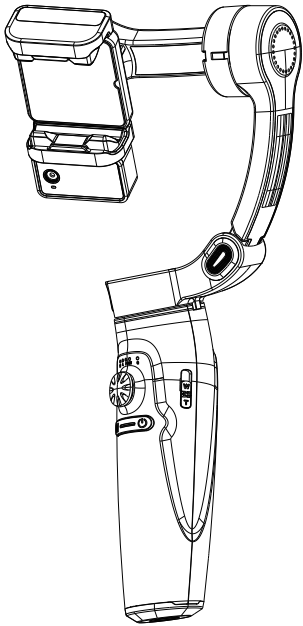

Merak Two Pro

1. Preparation

- ios: Search for "Gimbal Play " in the APP Store
  Android:Search for "Gimbal Play " in the Google Apps

Scan code to download "Gimbal Play" app

- Bluetooth connection:
  When using the APP, the Bluetooth name M2 will pop up in the APP. Click to confirm pairing.
  When using the native camera, search for the Bluetooth name M2 in Settings-Bluetooth and click to connect and pair.

2. Recognition stabilizer

This product is a three-axis stabilizer specially designed for mobile phones. It can assist mobile phones in shooting, effectively eliminate the picture shake caused by the external environment in the shooting process, and provide stable and smooth images. The stabilizer operation is simple and clear, the elderly and children can get started, can meet all the hobbyof mobile phone photography crowd use. The stabilizer can suppo horizontal and vertical shooting of the mobile phone and can control the direction button to manually adiust the shooting Angle of the mobile phone. to meet the requirements of shooting and video production.

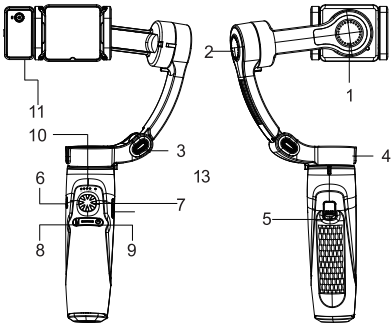

1.Roll axis
2. Pitch axis
3. Folding shaft
4. Course axis
5.Trigger
6.Type-C charging port
7. Direction
8.Mode
9.Power
10.Indicator light
PF: semi-following mode
L: lock mode
F: Full follow mode
POV: pov mode
Q: Battery display
11. AI module

3. Charging

- Use the standard USB Type-C data cable to connect to the USB charger to charge the gimbal. During charging, all display lights flash from right to left in a cycle, and all lights turn on when fully charged.

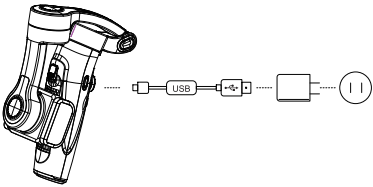

4. Installing a Mobile Phone

- Unfold the cradle head and release the locking state of pitchshaft, heading shaft and phone clip

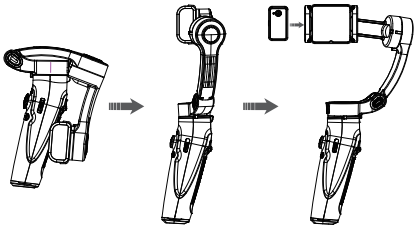

5. Function of the button

Power

Press and hold for 3 seconds to power on/off.Click to switch between horizontal and vertical shots.Double-click to center/reset.

M-Mode

Click once and a half to follow mode.Click twice to lock mode.Click three times for full follow mode.Click the pov mode four times/push the direction keys up and down in the pov mode to achieve the Inception mode.

Trigger/photo

Click the camera button to take photos/record videos.Double-click the camera button to switch between the front and rear lenses of the phone.Triple-click the photo button to take a photo - video exchange. Long press the camera button to record directly.

Focus

Push upward in the direction of W to enlarge the focal length in the APP.push downward in the direction of T to reduce the focal length in the APP.

Battery light Q

The Q light is always green and the battery has sufficient power.The Q light flashes green, battery power is medium.The Q light is always on red, the battery is low and needs to be charged.

Arrow

Adjust the gimbal in four directions: up, down, left and right.

Indicator light

PF: Half following mode, yaw axis motor follows.
L: Locking mode, the three motors are locked and do not follow.
F: Full following mode, yaw axis motor and tilt axis motor follow.
POV: Pov mode, three motors follow at the same time.

Note: Push the stick up and down in POV mode to enter Inception mode.

6. AI module gesture

Start Tracking
"OK" gesture

Stop Tracking
"Palm" gesture

Lights On/off
Thumb &little finger

Horizonal/Vertical
Double "Like" gesture

Taking Pictures
Thumb &index finger

Light Up
"Like" gesture

When the AI tracking module is installed, face the camera and gesture.

7. Specification

Charge Voltage	5V
Charge C urrent	<2000MA
Working C urrent	200-2000MA
Working Voltage	3.7V
Working Temps	0-40°
Working Hour s	5-8hours
Net Weight	335g
Compatible	<7inch phone
Payload Weight	280g
Battery Cap acity	2500mah
Twisting	-100°~+220°
Pitching	-45°~+45°
Heading	-160°~+160°
AccessoryInterface	1/4 nipple

8. Folding

- Fold the head and release the locking state of pitch shaft, heading shaft and phone clip.

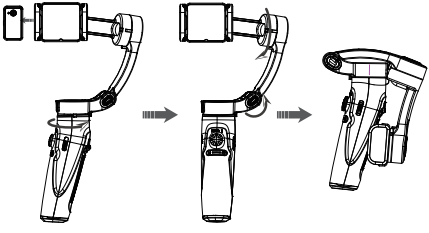

Disclaimer and Safety Instructions

Thank you for purchasing this device. Before using this product, please read the content of this article in detail. The content mentioned in this article is related to your safety and legal rights and responsibilities. Please use and set the product according to the requirements of this article.

From the time vou start using this Product, vou are deemed to have read the disclaimer and warnings carefully.

Understand, accept and accept all terms of this Statement. The Company shall not be responsible for any damage, injury or any legal liability caused by your direct or indirect use of the product. Users should follow all safety guidelines, including but not limited to those mentioned in the text.

⚠ Safe Operation Guide

1. The three-axis stabilizer is a non-waterproof product. Do not use the produci in the rain or wet environment, and do not put the product in water or get wet. Contact with liquid inside the product may cause corrosion reaction, which will cause spontaneous combustion of the battery, or even cause explosion.
2. If the product is on fire, please extinguish the fire immediately to avoid serious losses.
3. Please use the product in an environment where the temperature is between 0 and 40°C. Do not heat the product. Too high or too low temperature may shorten the service life of the product
4. Please pay attention to product safety. Do not mechanically strike, roll or throw the product, and do not place heavy objects on the product.
5. Do not disassemble the product in any way. If the battery is puncted during disassembly, the liquid inside the battery will leak out, or even cause fire and explosion.
6. If the battery is not used for a long time, discharge the battery to 40%-65% power and store it. Do not store the product for a long time after thorough discharge, lest the battery overdischarge, damage the cell and cannot be used. Re-discharge every three months or so to keep the battery alive.

Warning:

This device complies with Part 15 of the FCC Rules. Operation is subject to the following two conditions:

(1) this device may not cause harmful interference, and

(2) this device must accept any interference received, including interference that may cause undesired operation. Changes or modifcations not expressly approved by the party responsible for compliance could void the user's authority to operate the equipment.

NOTE: This equipment has been tested and found to comply with the limits for a Class B digital device, pursuant to Part 15 of the FCC Rules. These limits are designed to provide reasonable protection against harmful interference in a residential installation

This equipment generates, uses and can radiate radio frequencyenergy and, if not installed and used in accordance with the instructions, may cause harmful interference to radio communications. However, there is no guarantee that interference will not occur in a particular installation.

If this equipment does cause harmful interference to radio or television reception which can be determined by turning the equipment off and on, the user is encouraged to try to correct the interference by one or more of the following measures:

- Reorient or relocate the receiving antenna.I
- Increase the separation between the equipment and receiver.
- Connect the equipment into an outlet on a circuit different from that to which the receiver is connected.
- Consult the dealer or an experienced radio/TV technician for help

NOTE: This device and its antenna(s) must not be co-located oroperation in conjunction with any other antenna or transmitter

The device has been evaluated to meet general RF exposurerequirement. The device can be used in portable exposure condition without restriction.