M3 Pro 3-axis Gimbal

Quick Start Guide

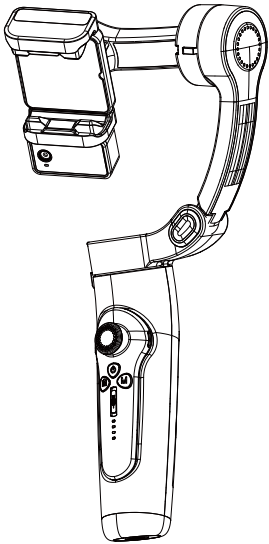

Merak 3 Pro

- English: Quick Start Guide
- Deutsch: Schnellstartanleitung
- Italiano: Guida Rapida
- Français: Guide de Démarrage Rapide
- Español: Guía de Inicio Rápido
- 日本語: クイックスタートガイド
- Polski: Szybki Przewodnik Startowy
- Čeština: Rychlý Průvodce Spuštěním
- Português: Guia de Início Rápido
- Magyar: Gyorsindítási Útmutató
- Dansk: Hurtig Start Guide
- 한국어: 빠른 시작 가이드
- Svenska: Snabbstartsguide
- العربية: دليل البدء السريع
- Nederlands: Snelstartgids
- Ελληνικά: Οδηγός Γρήγορης Εκκίνησης

1. Preparation

- ios: Search for "Gimbal Play " in the APP Store
  Android:Search for "Gimbal Play " in the Google App

Scan code to download "Gimbal Play" app

- **Bluetooth connection:**

  When using the APP, the Bluetooth name M3 will pop up in the APP. Click to confirm pairing.When using the native camera, search for the Bluetooth name M3 in Settings-Bluetooth and click to connect and pair.

2. Recognition stabilizer

This product is a three-axis stabilizer specially designed for mobile phones. It can assist mobile phones in shooting, effectively eliminate the picture shake caused by the external environment in the shooting process, and provide stable and smooth images. The stabilizer operation is simple and clear, the elderly and children can get started, can meet all the hobbyof mobile phone photography crowd use. The stabilizer can suppo horizontal and vertical shooting of the mobile phone and can control the direction button to manually adiust the shooting Angle of the mobile phone. to meet the requirements of shooting and video production.

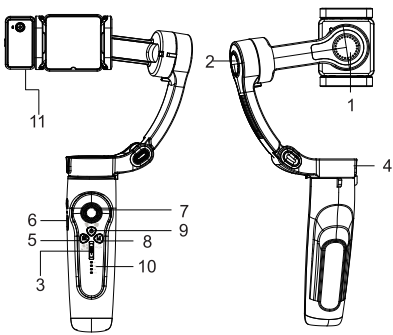

1. Roll axis
2. Pitch axis
3. Zoom
4. Course axis
5. Photo
6. Type-C charging port
7. Direction
8. Mode
9. Power
10. Indicator light
    AF: Full follow mode
    POV: POV mode
    DM: Dream Space Mode
    Remote control indicator light
11. AI module

3. Charging

Use the standard USB Type-C data cable to connect to the USB charger to charge the gimbal. During charging, all display lights flash from right to left in a cycle, and all lights turn on when fully charged.

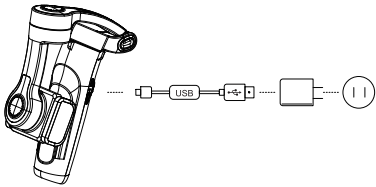

4. Installing a Mobile Phone

Unfold the cradle head and release the locking state of pitchshaft, heading shaft and phone clip.

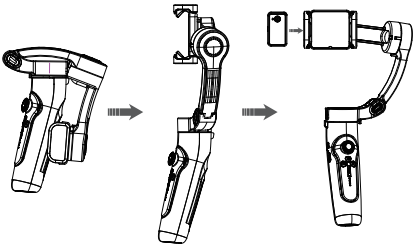

5. Controller operation introduction

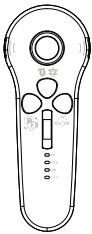

① **When the controller is attached to the stabilizer:**

After the stabilizer is powered on, the controller will automatically turn on and pair, while the stabilizer charges the controller.

② **When the controller is separated from the stabilizer:**

The controller needs to be powered on separately,and it will automatically pair after being turned on.

6. Function ofthe button

Power Button
Single Click: Switch between horizontal and vertical shooting.
Double Click: Return to the center position/reset the gimbal.
Long Press: Power off

Focusing
Push upwards (W direction) in the app to zoom in.
Push downwards (T direction) in the app to zoom out.

M-Mode
Single Click: Switch modes. When switched to DM push the joystick up or down to enter manual Dream Space mode.
Double Click: Enter automatic Dream Space mode, generating a 15-second video.

Battery Indicator
Solid Green Light: Battery level is sufficient
Solid Blue Light: Battery level is moderate
Solid Red Light: Battery level is low and needs charging
The battery indicator flashes while charging.

Joystick
Use the joystick to control the gimbal's movement in four directions (up, down, left, and right), allowing for easy angle adjustments while shooting.

Indicator light
Single Light Flashing: Low battery on the remote, please return it to the handle for use.
Signal Light Flashing: Communication between the remote and the main unit is interrupted, please return it to the handle and re-pair for use.
Four Lights Flashing in Sequence: Charging in progress.

Camera
Single Click: Take a photo / Record video
Double Click: Switch between front and rear cameras [app]
Triple Click: Switch between photo and video mode [app]
Long Press: Start recording video directly [app]

7. AI module gesture

Activate Tracking

Stop Tracking

Turn On Off Light

Landscape or Portrait

Start Photo Capture

Switch Light Mode

When the AI tracking module is installed, face the camera and gesture

Note: After switching between landscape and portrait modes, the AI module will enter a tracking stop state. You need to make the "OK" gesture again to reactivate tracking.

8. Specification

Charging Voltage	5V
Charging Current	<2000mA
Working Current	200-2000mA
Working Voltage	3.7V
Working Temperature	-10℃~40℃
Working Time	5-8hours
Net Product Weight	340g
Applicable Models	Below 7 Inches
Load Weight	280g
Lithium-ion Battery	2500mAh
Roll Axis Range of Motion	-88° ~ +162°
Pitch Axis Range of Motion	-46° ~ +48°
Yaw Axis Range of Motion	-170° ~ +175°
Accessory Interface	1/4 Inch Thread Interface

9. Folding

- Fold the head and release the locking state of pitch shaft, heading shaft and phone clip.

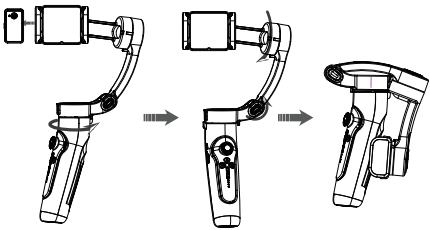

FCC Warning Statement: Changes or modifications to this unit not expressly approved by the party responsible for compliance could void the user's authority to operate the equipment. This equipment has been tested and found to comply with the limits for a Class B digital device, pursuant to Part 15 of the FCC Rules. These limits are designed to provide reasonable protection against harmful interference in a residential installation. This equipment generates, uses and can radiate radio frequency energy and, if not installed and used in accordance with the instructions, may cause harmful interference to radio communications.

However, there is no guarantee that interference will not occur in a particular installation. If this equipment does cause harmful interference to radio or television reception, which can be determined by turning the equipment off and on, the user is encouraged to try to correct the interference by one or more of the following measures:

- **Reorient or relocate the receiving antenna.**
- **Increase the separation between the equipment and receiver.**
- **Connect the equipment into an outlet on a circuit different from that to which the receiver is connected.**
- **Consult the dealer or an experienced radio/TV technician for help.**

This device complies with Part 15 of the FCC Rules. Operation is subject to the following two conditions: (1) this device may not cause harmful interference, and (2) this device must accept any interference received, including interference that may cause undesired operation.

FCC Radiation Exposure Statement

The device has been evaluated to meet general RF exposure requirement. The device can be used in portable exposure condition without restriction.