RS2T58M TX发射模组

说明书

Contents list目录

1.Features特征 5
2.Block Diagram 方块图 6
3.Absolute Maximum Ratings 极限参数 7
4.Operating Conditions操作条件 8
5.Standard Test Conditions 标准试验条 8
6.RF Performance 射频性能 10
7.RF Channel List射频信道列表 11
8.Audio Specification (I2S to I2S)音频规格 12
9.Timing Parametric Requirements Information定时参数要求信息 13
10.Interface Specification接口规范 14
11.The audio signal corresponding to I2S DATA I2S DATA对应的音频信号 15
12.RSR_235M_2T_5.8G connect pin description RSR_235M_2T_5.8G连接引脚说明 16
13.FFC_24P_0.5MM SPECIFICATION FFC_24P_0.5MM规格 17
14.PCB Layout PCB布局 18
15.Reference schematic 参考线路图 19

Change history				
Revision	modify the content	page	Revision date	Revised by
Draft			2024/03/06	JWP
	Update 24pin socket and definition, update PCB‘s photo	17-19	2024/04/12	YJX
	The I2S data corresponding to the 8ch audio signal			

1.Features特征

RSR_235M_2T_5.8G is a wireless audio transferring module with small size and low power . Its designed based on CC2538 MCU and BK5813 RF chip.Cooperate with RSR_BK58_RX_V1.0 can achieve two sending and eight receiving

RSR_235M_2T_5.8G是一款体积小、功耗低的无线音频传输模块。其设计基于CC2538 MCU和BK5813 RF chip。与RSR_BK58_RX_V1.0配合可实现两发八收。

- 5.2/5.8GHz GFSK modulation
- Size：60mmx35mm
- PCB Onboard Antenna(Double antenna) or External FPC Antenna
- I2S digital audio interface, I2S sampling rate supports16K/32K/44.1K/48K/88.2K/96K/176.4K/192K , bit 16bit/24bit
- I2C or UART to control external devices
- IO input and output configuration
- Main and auxiliary audio delay time <25ms
- Application: wireless speakers, wireless subwoofer, home Theater

2. Block Diagram方块图

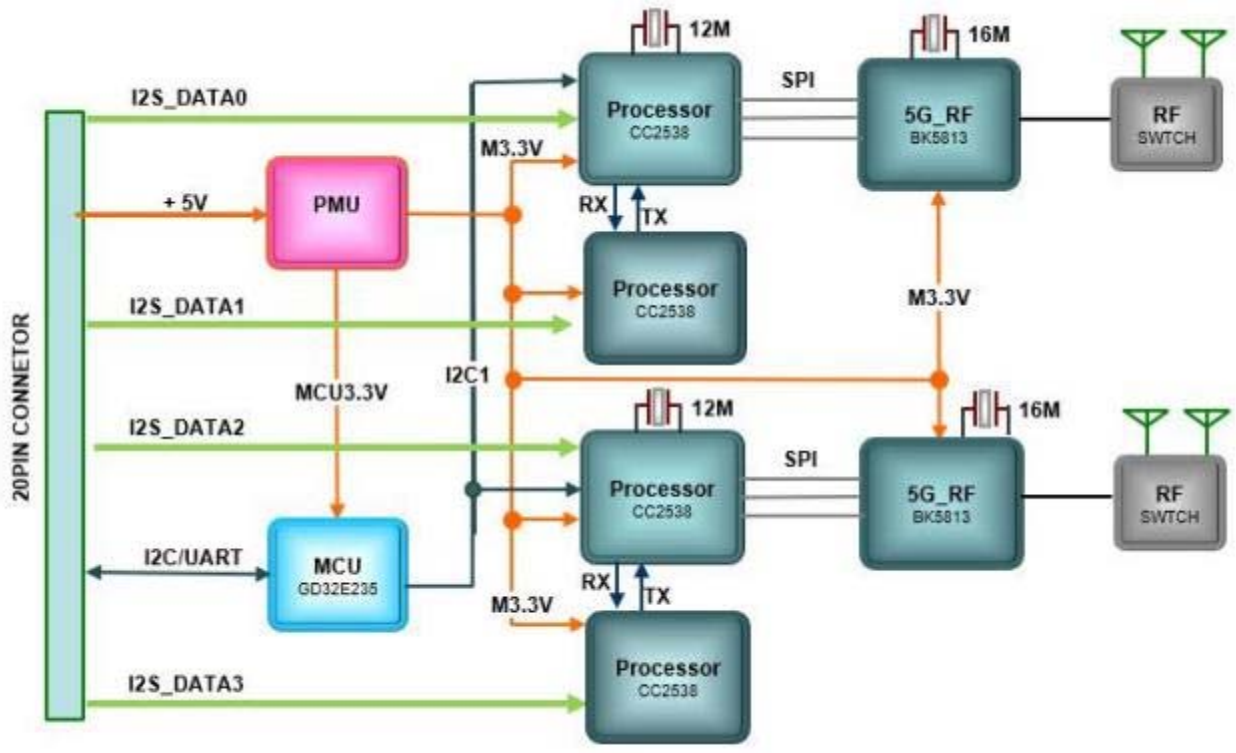

3.Absolute Maximum Ratings极限参数

Caution：The specifications above the Table define levels at which permanent damage to the device can occur. Function operation is not guaranteed under these conditions.

Operating at absolute maximum conditions for extend periods can adversely affect the long-term reliability of the device.下表中的规格定义了可能对设备造成永久性损坏的级别。在这些条件下无法保证功能运行。在绝对最大条件下长时间运行会对设备的长期可靠性产生不利影响。

Parameter	Min	Max	Unit
Storage Temperature	-10	85	℃
StorageHumidity(@40℃)	-	90	%

- Other conditions其他条件

1) Do not use or store modules in the corrosive atmosphere, especially where chloride gas, sulfide gas, acid, alkali, salt or the like are contained.请勿在腐蚀性环境中使用或储存模块，尤其是含有氯化物气体、硫化物气体、酸、碱、盐等的环境。

Also, avoid exposure to moisture.此外，避免暴露在潮湿环境中。

2) Store the modules where thetemperature and relative humidity do not exceed 5 to 40℃ and 20 to 60%. 将模块存放在温度和相对湿度不超过5至40℃和20至60%的地方。

4.Operating Conditions操作条件

Parameter	Min	Typ	Max	Unit
Ambient Temperature	0	-	85	℃
Ambient Humidity (40℃)	-	-	85	%
Supply Voltage	4.75	5.0	5.25	Vdc

5.Standard Test Conditions标准试验条件

The Test for electrical specification shall be performed under the following condition Otherwise this following conditions, not guaranteed this performance.电气规范测试应在以下条件下进行，否则以下条件不能保证该性能。

5-1. Ambient condition环境条件

Temperature	25±5℃
Humidity	65±5%

5-2. Power supply voltages电源电压

Input power	Supply Voltage
+5.0	+5.0V ±0.25V（5%）

5-3. Current Consumption电流消耗

Current Consumption	Average Current	Unit
Tx Mode	250	mA

5-4. RF Performance射频性能

Parameter（Condition）	Min	Typ	Max	Unit
Channel Range	5150	-	5250	MHz
	5725	-	5850	
Tx output power	4	7.9	11	dBm
Rx sensitivity			-80	dBm
20dB Bandwidth	-	-	4.0	MHz

6. RF Performance射频性能

Parameter (Condition)	Min	Typ	Max	Unit
ChannelRange	5150	-	5250	MHz
	5725	-	5850	
Tx outputpower	4	7.9	11	dBm
Rx sensitivity			-80	dBm
20dBBandwidth	-	-	4	MHz

* Normal Condition : 25т,VDD=3.3V.

* RF characteristics is board limit. It can differ according to standards.

* Rx power :Blck RX – (Attenuator + Cable loss)

Note：Cable loss=0.2dBm

7. RF Channel List射频信道列表

7-1. 5.2G

5155	5163	5171	5179	5187	5195	5203	5211	5219	5227	5235	5241
5159	5167	5175	5183	5191	5199	5207	5215	5223	5231	5239	5245

7-1. 5.8G

5730	5738	5746	5754	5762	5770	5778	5786	5794	5802	5810	5818	5826	5834	5842
5734	5742	5750	5758	5766	5774	5782	5790	5798	5806	5814	5822	3830	5838	5848

8. Audio Specification (I2S to I2S)音频规格

Item	Min	Typ	Max	Unit	Note
SNR	-	TBC	-	dB	@1kHz
THD+ N	-	TBC	-	%	@1kHzstereo
Frequencyresponse	-	TBC	-	KHZ	@48Kstereo
Dynamic range	-	TBC	-	dB	@1kHz
Delay	-	24	≤30	ms	

9.Timing Parametric Requirements Information
定时参数要求信息

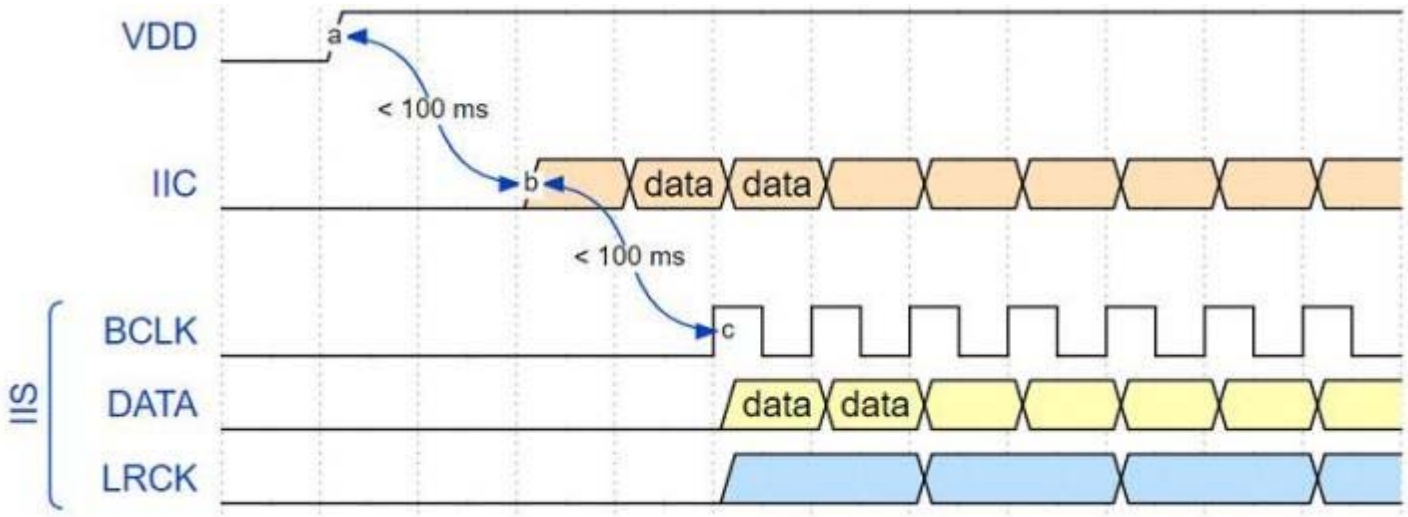

		MIN	NOM	MAX	UNIT
a~b	IIC setup time	-	-	100	ms
b~c	IIS setup time	-	-	100	ms

10. Interface Specification接口规范

I2S Timing

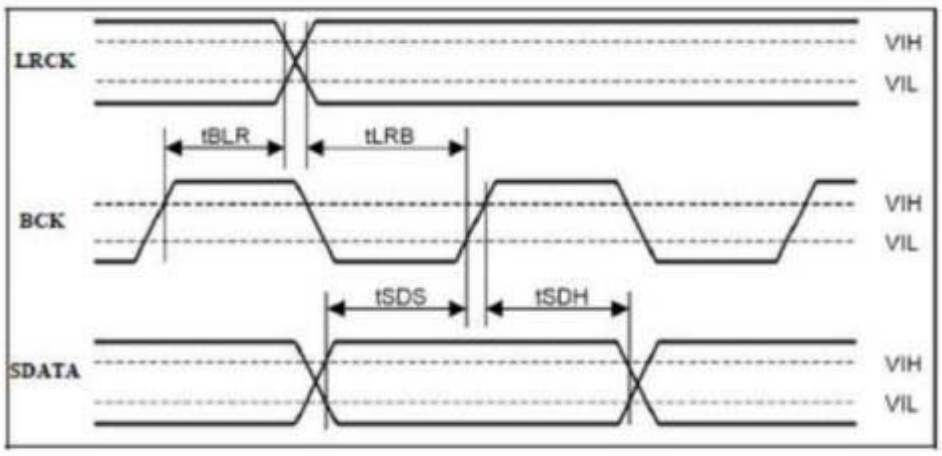

Symbol	Parameter	Min	Typ	Max	Unit
tBLR	BCKrising toLRCKedge	40			ns
tLRB	LRCKedge toBCKrise	40			ns
tSDS	SDATA setuptime	40			ns
tSDH	SDATAhold time	40			ns

11. The audio signal corresponding to I2S DATA

I2S DATA对应的音频信号

Tx	I2S_DATA	AUDIO signal(6CH)	AUDIO signal(8CH)
TX1	I2S_DIN_0	FL/FR	FL（左声道）/FR（右声道）
	I2S_DIN_1	-/-	FLtw（左高音）/FRtw(右高音）
TX2	I2S_DIN_2	Lt/Rt	Lt（左顶）/Rt（右顶）
	I2S_DIN_3	CEN/SW	CEN（中置）/SW（重低音）

12. RSR_235M_2T_5.8G connect pin description连接引脚说明

pin	Pin name	I/O Type	I/O Level			I/O Current	Functions description
1	VDD(5.0V)	P	5V			250mA	Power Supply，connect to VDD5V
2	VDD(5.0V)	P	5V				Power Supply，connect to VDD5V
3	GND	P	0V				Power ground
4	GND	P	0V				Power ground
5	I2S_DIN3	I/O	Low:0-0.4V	High:2.3-3.3V	Default：0V	±8mA	I2S_DATA4_IN(STEREO)
6	GND	P	0V				Power ground
7	I2S_DIN2	I/O	Low:0-0.4V	High:2.3-3.3V	Default：0V	±8mA	I2S_DATA3_IN(STEREO)
8	GND	P	0V				Power ground
9	I2S_DIN1	I/O	Low:0-0.4V	High:2.3-3.3V	Default：0V	±8mA	I2S_DATA2_IN(STEREO)
10	GND	P	0V				Power ground
11	I2S_DIN0	I/O	Low:0-0.4V	High:2.3-3.3V	Default：0V	±8mA	I2S_DATA1_IN(STEREO)
12	GND	P	0V				Power ground
13	GND	P	0V				Power ground
14	I2S_LRCK	I/O	Low:0-0.4V	High:2.3-3.3V	Default：0V	±8mA	I2S_LRCK_IN
15	GND	P	0V				Power ground
16	I2S_BCK	I/O	Low:0-0.4V	High:2.3-3.3V	Default：0V	±8mA	I2S_BCK_IN
17	GND	P	0V				Power ground
18	TX/I2C_SCL	I/O	Low:0-0.4V	High:2.3-3.3V	Default：0V	±20mA	UART or I2C_SCL control
19	RX/I2C_SDA	I/O	Low:0-0.4V	High:2.3-3.3V	Default：0V	±20mA	UART or I2C_SCL control
20	GND	P	0V				Power ground
21	INT	I/O	Low:0-0.4V	High:2.3-3.3V	Default：0V	±20mA	INT active-low
22	GPIO	I/O	Low:0-0.4V	High:2.3-3.3V	Default：0V	±20mA	Reserved for future use Default low
23	GND	P	0V				Power ground
24	PAIR	I/O	Low:0-0.4V	High:2.3-3.3V	Default：0V	±20mA	Connect pair key

注：GPIO口上电复位后，默认电平为低（LOW）

13. FFC_24P_0.5MM　SPECIFICATION规格

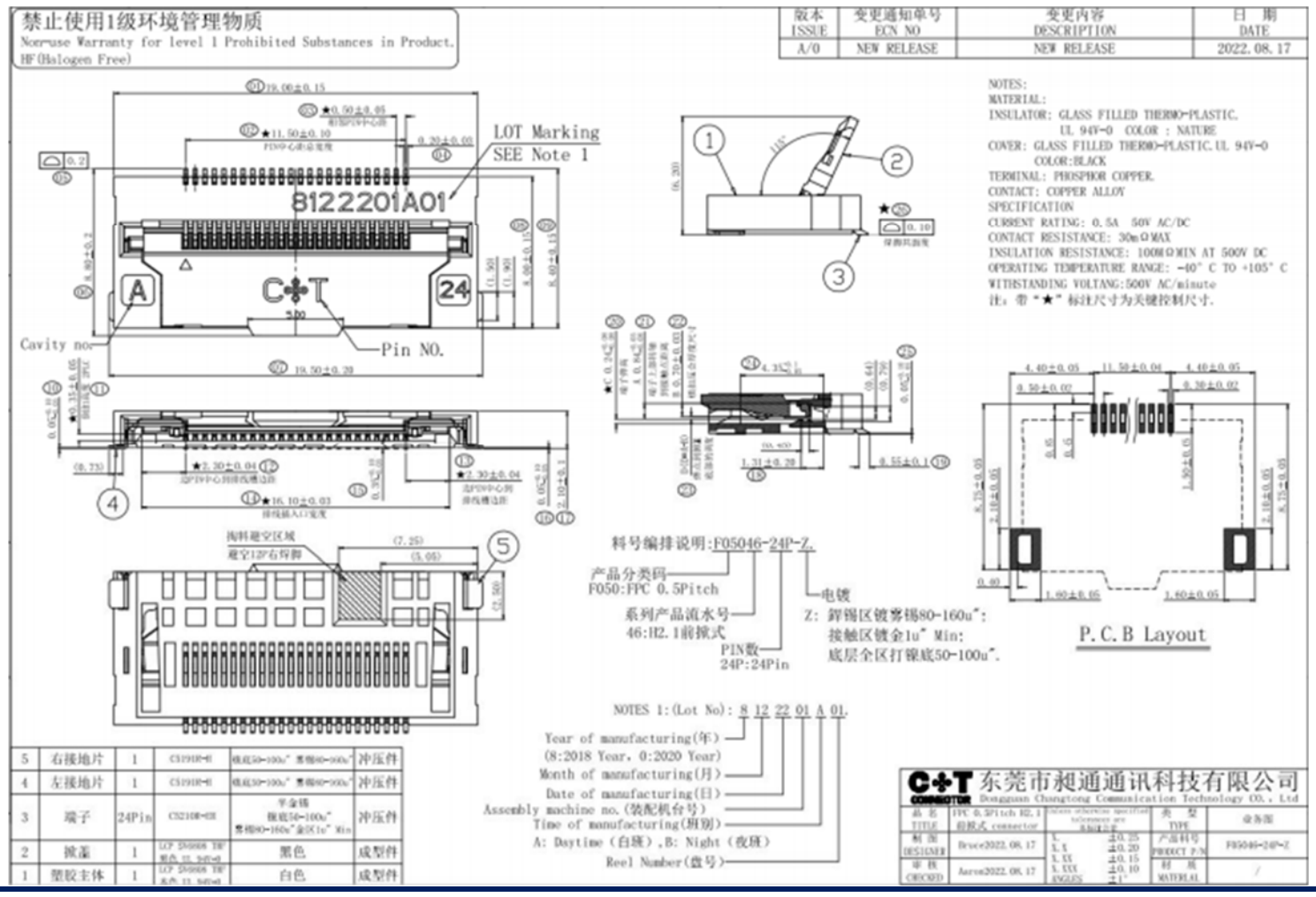

14. PCB Layout

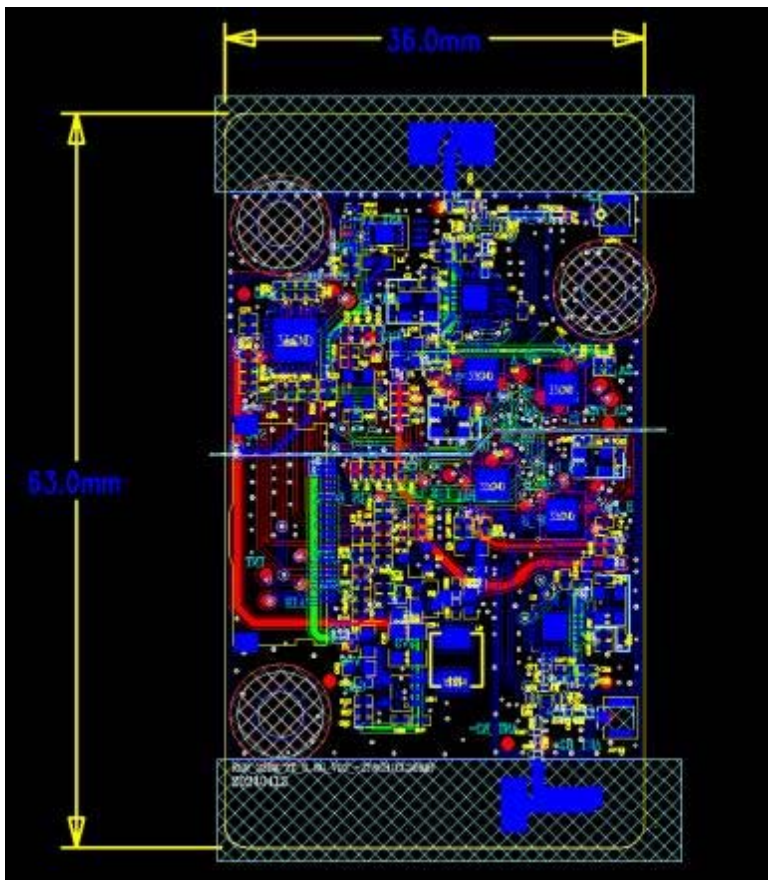

15-1. Reference schematic

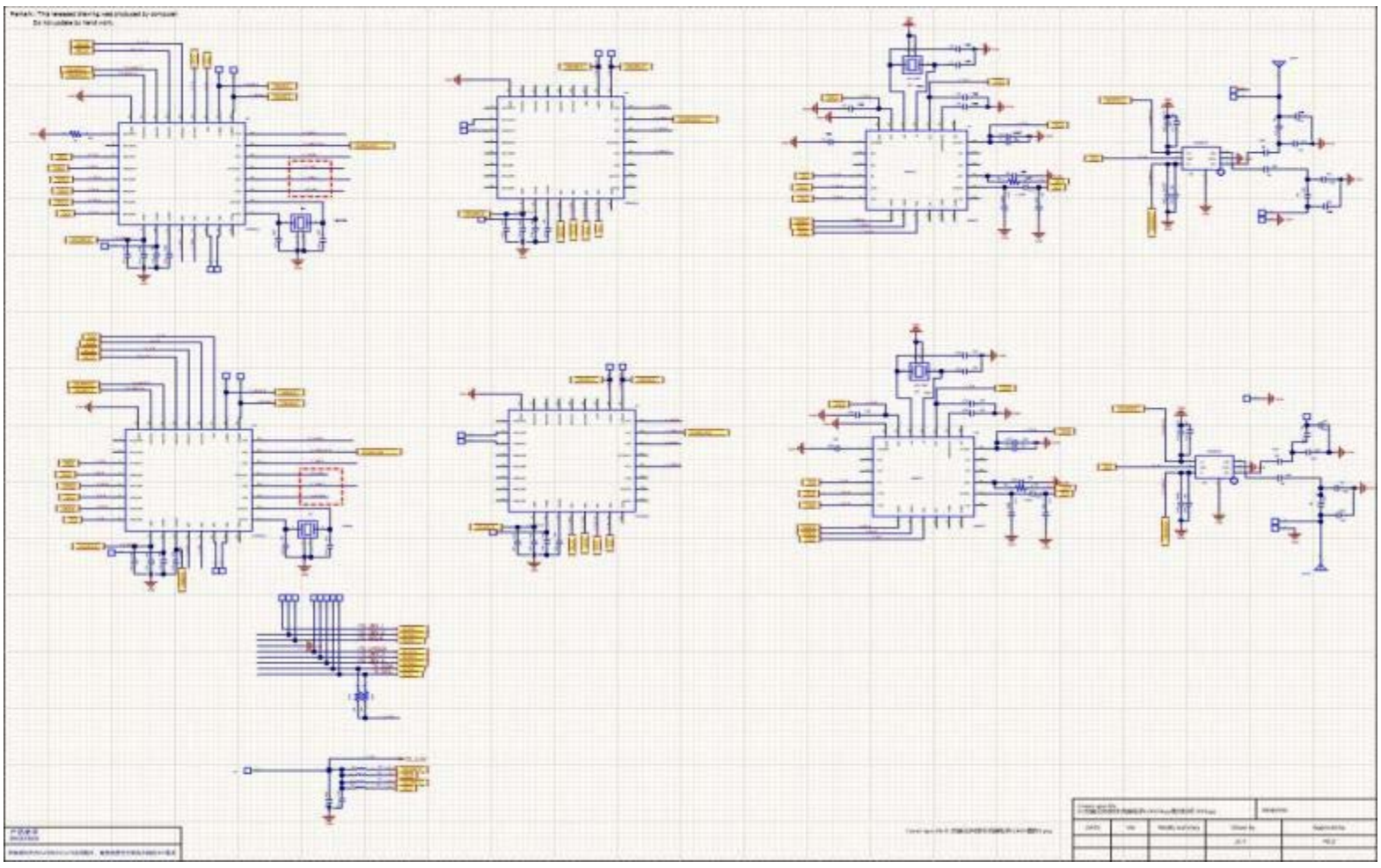

15-2. Reference schematic

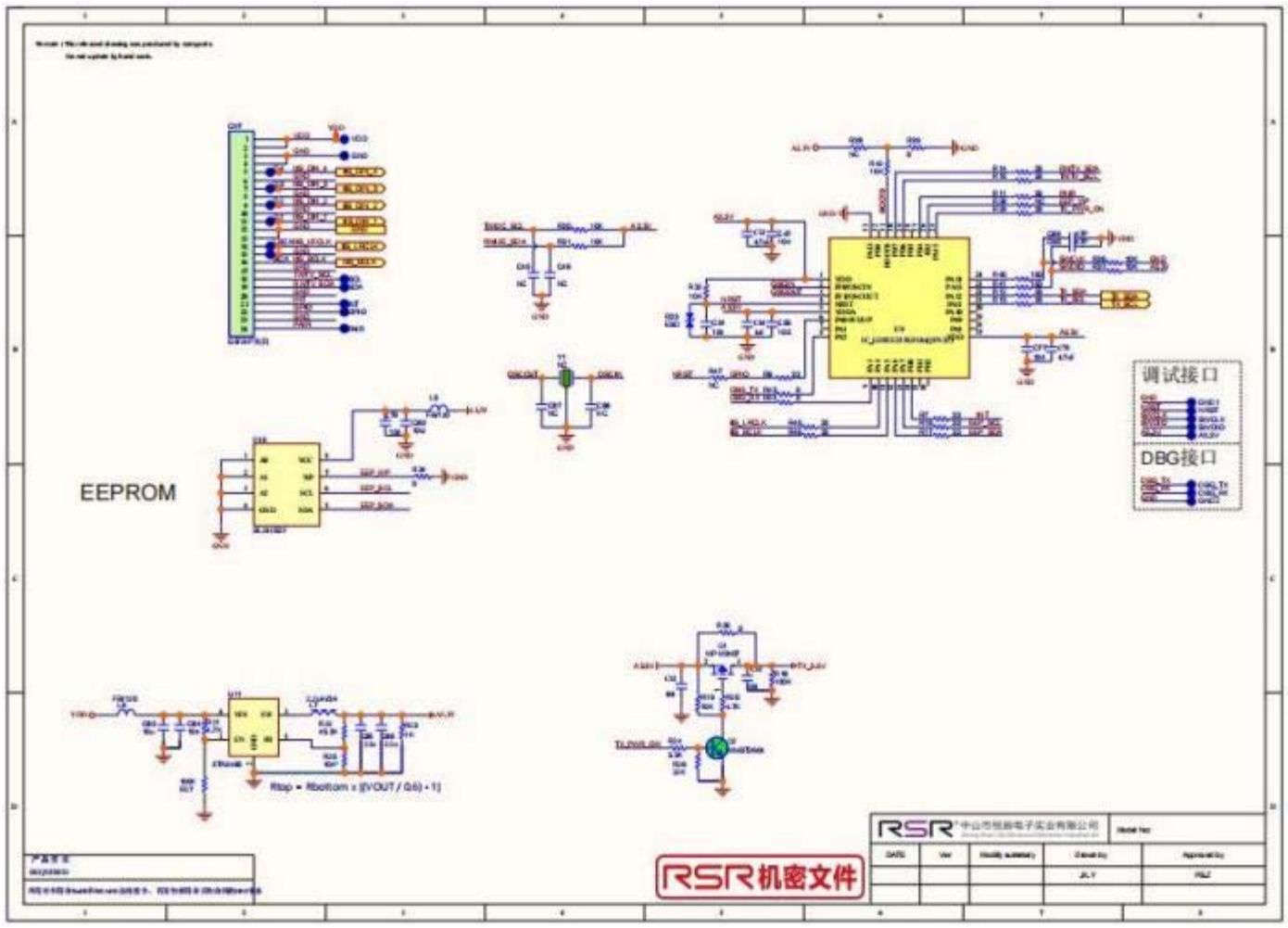

微功率警语：

（一）符合“微功率短距离无线电发射设备目录和技术要求”的第（一）条款G类设备，使用在家庭等场景，采用PCB天线，产品上电即可打开；
（二）不得擅自改变使用场景或使用条件、扩大发射频率范围、加大发射功率（包括额外加装射频功率放大器），不得擅自更改发射天线；
（三）不得对其他合法的无线电台（站）产生有害干扰，也不得提出免受有害干扰保护；
（四）应当承受辐射射频能量的工业、科学及医疗（ISM）应用设备的干扰或其他合法的无线电台（站）干扰；
（五）如对其他合法的无线电台（站）产生有害干扰时，应立即停止使用，并采取措施消除干扰后方可继续使用；
（六）在航空器内和依据法律法规、国家有关规定、标准划设的射电天文台、气象雷达站、卫星地球站（含测控、测距、接收、导航站）等军民用无线电台（站）、机场等的电磁环境保护区域内使用微功率设备，应当遵守电磁环境保护及相关行业主管部门的规定；
（七）禁止在以机场跑道中心点为圆心、半径5000米的区域内使用各类模型遥控器；
（八）微功率设备使用时温度在0℃~85温度间，电压+5.0V ±0.25V。

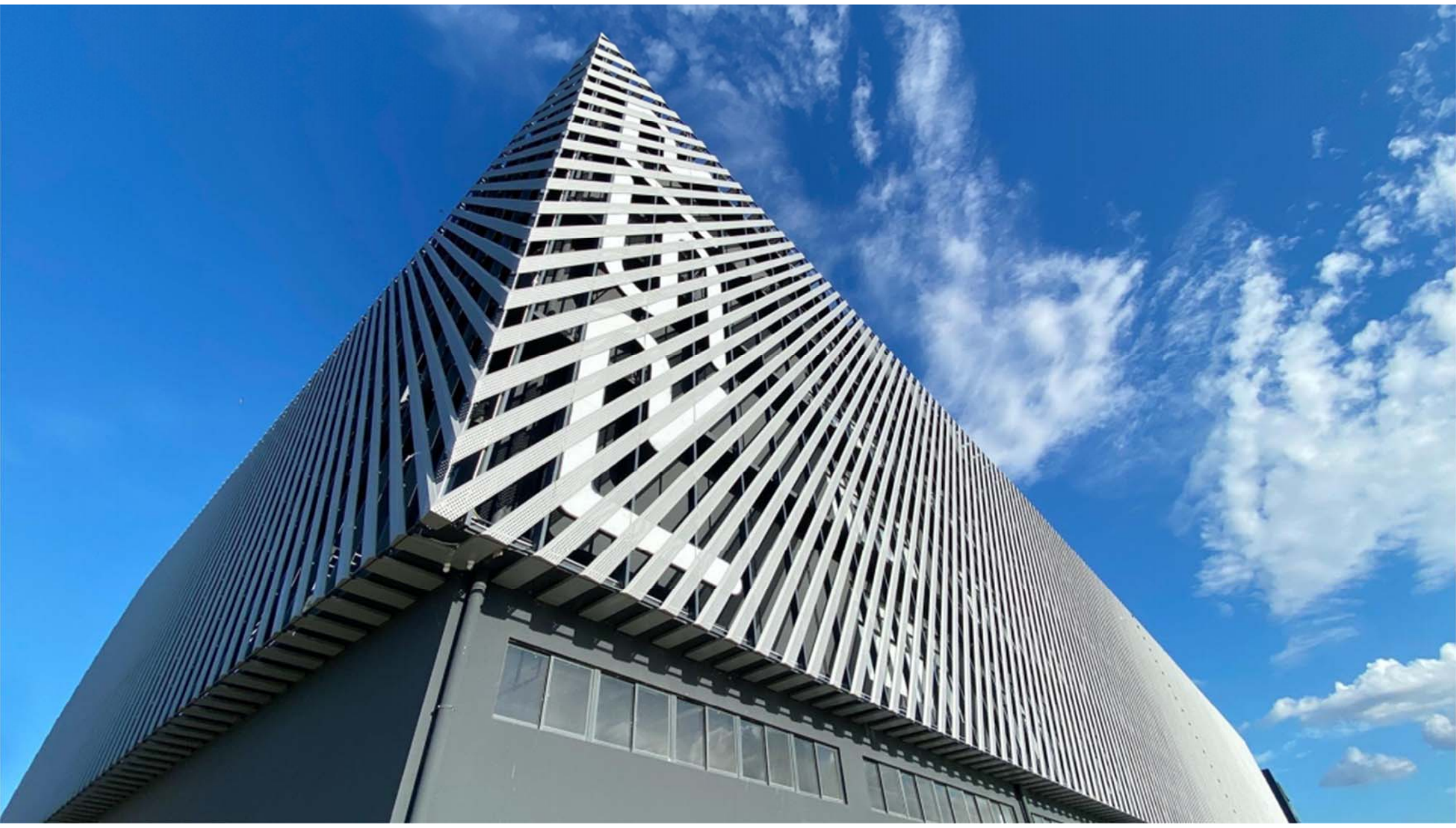

FCC Statement

This equipment has been tested and found to comply with the limits for a Class B digital device, pursuant to part 15 of the FCC rules. These limits are designed to provide reasonable protection against harmful interference in a residential installation. This equipment generates, uses and can radiate radio frequency energy and, if not installed and used in accordance with the instructions, may cause harmful interference to radio communications.
However, there is no guarantee that interference will not occur in a particular installation.
If this equipment does cause harmful interference to radio or television reception, which can be determined by turning the equipment off and on, the user is encouraged to try to correct the interference by one or more of the following measures:
-Reorient or relocate the receiving antenna.
-Increase the separation between the equipment and receiver.
-Connect the equipment into an outlet on a circuit different from that to which the receiver is connected.
-Consult the dealer or an experienced radio/TV technician for help.
This equipment complies with Part 15 of the FCC Rules. Operation is subject to the following
two conditions:
(1) This device may not cause harmful interference, and
(2) This device must accept any interference received, including interference that may cause undesired operation.
Any changes or modifications not expressly approved by the party responsible for compliance could void the user’ s authority to operate the equipment.
Please notice that if the FCC identification number is not visible when the module is installed inside another device, then the outside of the device into which the module is installed must also display a label referring to the enclosed module. This exterior label can use wording such as the following:
“Contains FCC ID: 2BEHE-RS2T58M” any similar wording that expresses the same meaning may be used.

This equipment complies with FCC radiation exposure limits set forth for an uncontrolled environment. This equipment should be installed and operated with a minimum distance of 20cm between the radiator & your body. This transmitter must not be co-located or operating in co njunction with any other antenna or transmitter.
The module is limited to OEM installation ONLY.
The OEM integrator is responsible for ensuring that the end-user has no manual instruction to remove or install module.

The module is limited to installation in mobile application.
A separate approval is required for all other operating configurations, including portable configurations with respect to Part 2.1093 and difference antenna configurations.
There is requirement that the grantee provide guidance to the host m anufacturer for compliance with Part 15B requirements.
The module complies with FCC Part 15.247 / Part 15.407 and apply for Single module approval.

Canada Statement

This device complies with Industry Canada’s licence-exempt RSSs.
Operation is subject to the following two conditions:
(1) This device may not cause interference; and
(2) This device must accept any interference, including interference that may cause undesired operation of the device.

Le présent appareil est conforme aux CNR d’Industrie Canada applicables aux appareils radio

exempts de licence. L' exploitation est autorisée aux deux conditions suivantes :
(1) l' appareil ne doit pas produire de brouillage;
(2) l' utilisateur de l' appareil doit accepter tout brouillage radio électrique subi, même
si le brouillage est susceptible d' en compromettre le fonctionnement.

Please notice that if the ISED certification number is not visible when the module is installed inside another device, then the outside of the device into which the module is installed must also display a label referring to the enclosed module. This exterior label can use wording such as the following:

"Contains IC: 26250-RS2T58M" any similar wording that expresses the same meaning may be used.

l'appareil hôte doit porter une étiquette donnant le numéro de certification du module d'Industrie Canada, précédé des mots « Contient un module d'émission », du mot « IC: 26250-RS2T58M » ou d'une formulation similaire exprimant le même sens, comme suit

The device for operation in the band 5150-5250 MHz is only for indoor use to reduce the potential for harmful interference to co-channel mobile satellite systems.

Les dispositifs fonctionnant dans la bande 5150-5250 MHz sont réservés uniquement pour une
utilisation à l' intérieur afin de réduire les risques de brouillage préjudiciable aux
systèmes de satellites mobiles utilisant les mêmes canaux.

The device meets the exemption from the routine evaluation limits in section 2.5 of RSS 102 and compliance with RSS-102 RF exposure, users can obtain Canadian information on RF exposure and compliance.
Le dispositif rencontre l'exemption des limites courantes d'évaluation dans la section 2.5 de
RSS 102 etla conformité à l'exposition de RSS-102 RF, utilisateurs peut obtenir l'information canadienne surl'exposition et la conformité de rf.
This transmitter must not be co-located or operating in conjunction with any other antenna or transmitter. This equipment should be installed and operated with a minimum distance of 20 centimeters between the radiator and your body.
Cet émetteur ne doit pas être Co-placé ou ne fonctionnant en même temps qu'aucune autre antenne ouémetteur. Cet équipement devrait être installé et actionné avec une distance minimum de 20 centimètres entre le radiateu r et votre corps.