TCL

TP200K

Party Speaker

Quick Start Guide

1

EN Make sure you read all the safety information before you use this product.

* Power plug design may vary.

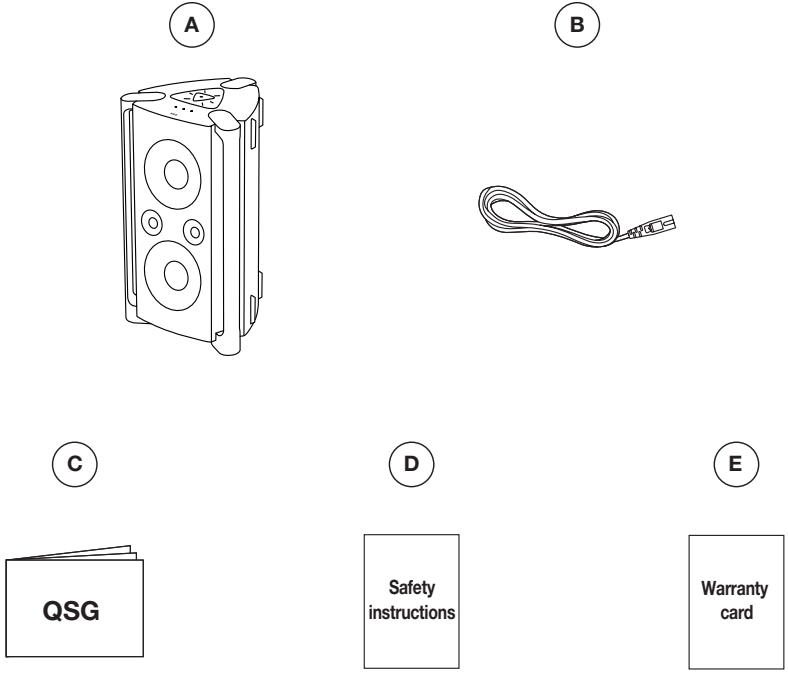

2a

❶ **Light Button**

❷ **Bluethooth Button**

❸ **Bass Boost Button**

❹ **Power Button**

❺ **Play/Pause Button**

❻ **VOL - Button**

❼ **VOL + Button**

❽ **LED Indicator**

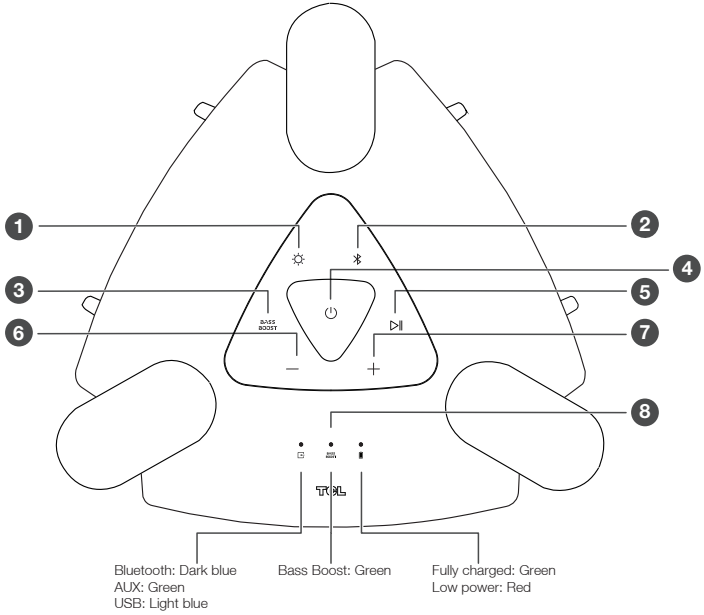

❶ Short press to switch different light colors and mode including off.
Long press to on/off the strobe light.

❷ Switch to BT mode by short press and long press again to disconnect the BT connection and enter pairing mode.

❸ Bass enhancer.

❹ Power on or power off.

❺ Play and pause playback by short press.
Switch to the next song by quick double press.
Switch to the previous song by quick triple press.

❻ Short press to decrease the volume step by step.
Long press to decrease the volume continually.

❼ Short press to increase the volume step by step.
Long press to increase the volume continually.

❽ Includes battery light, source light, bass boost light.

2b

❶ **TWS/LINK Button**

❷ **Source Button**

❸ **Gain Knob**

❹ **Mic Socket or Guitar Socket**

❺ **Mic Socket**

❻ **Guitar/Mic Switch**

❼ **USB Socket**

Supported audio files:
MP3, WMA, WAV, FLAC, AAC.

USB format:
FAT16, FAT32, NTFS.

❽ **Echo Knob**

❾ **AUX Socket**

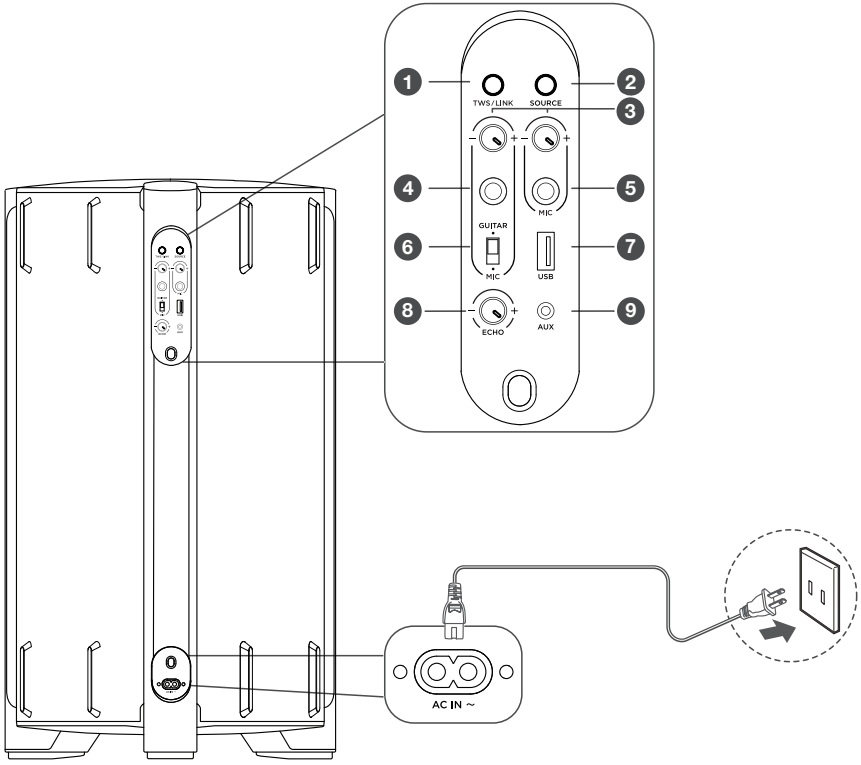

3

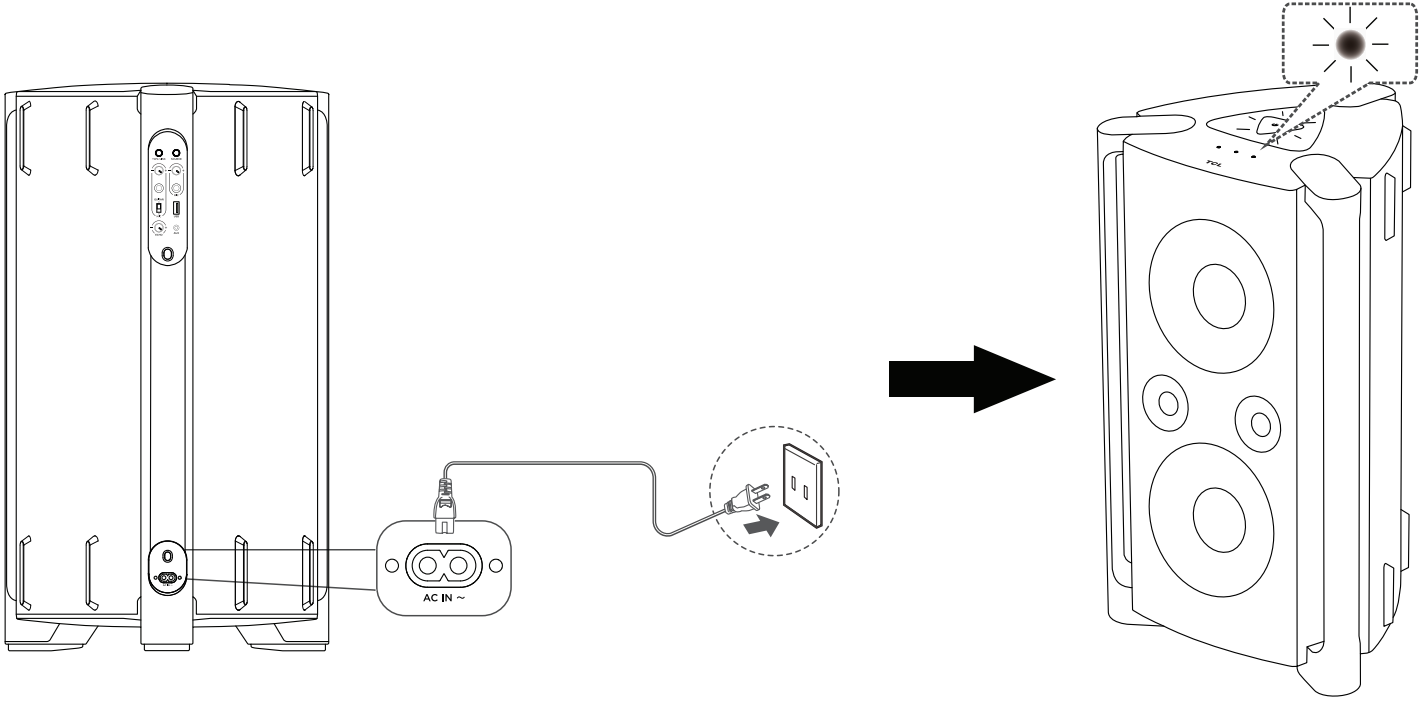

4

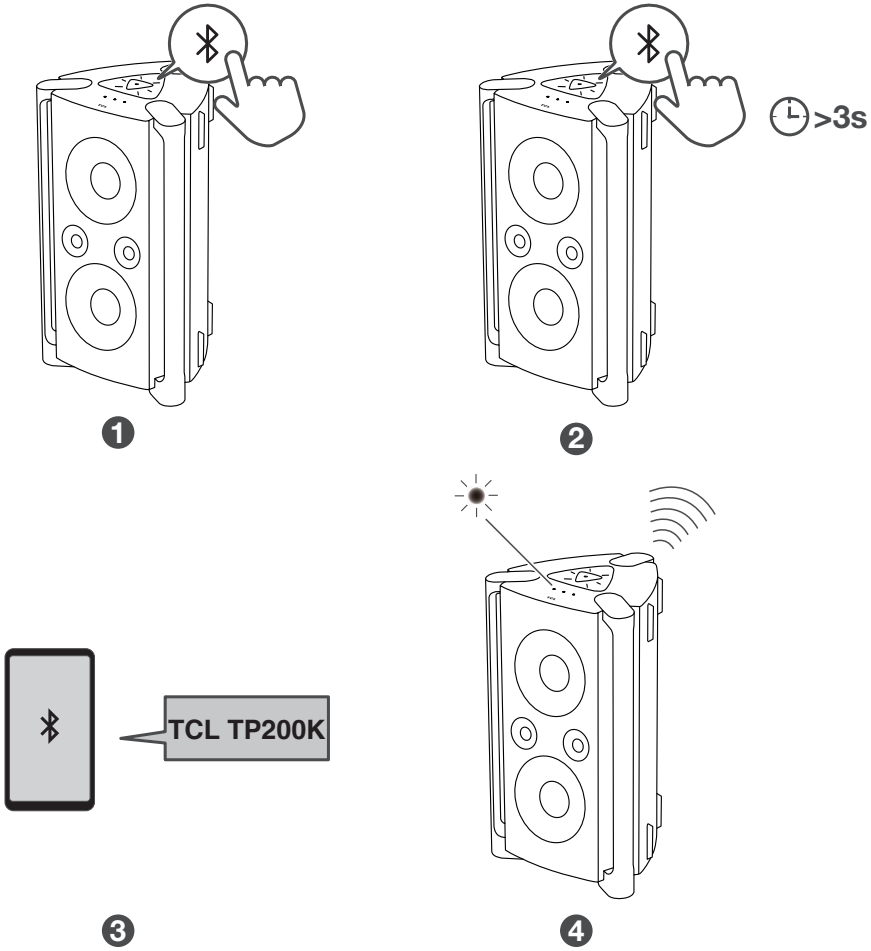

5

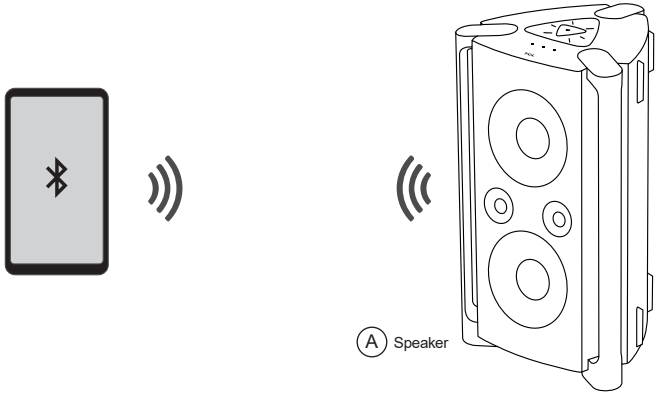

1

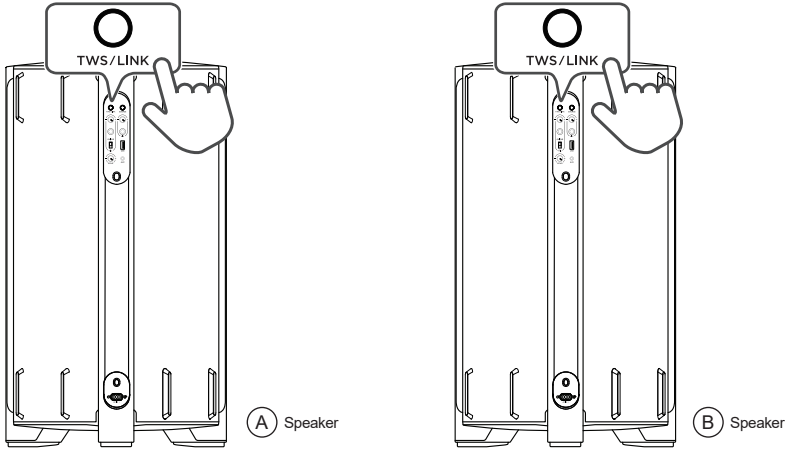

2

6a

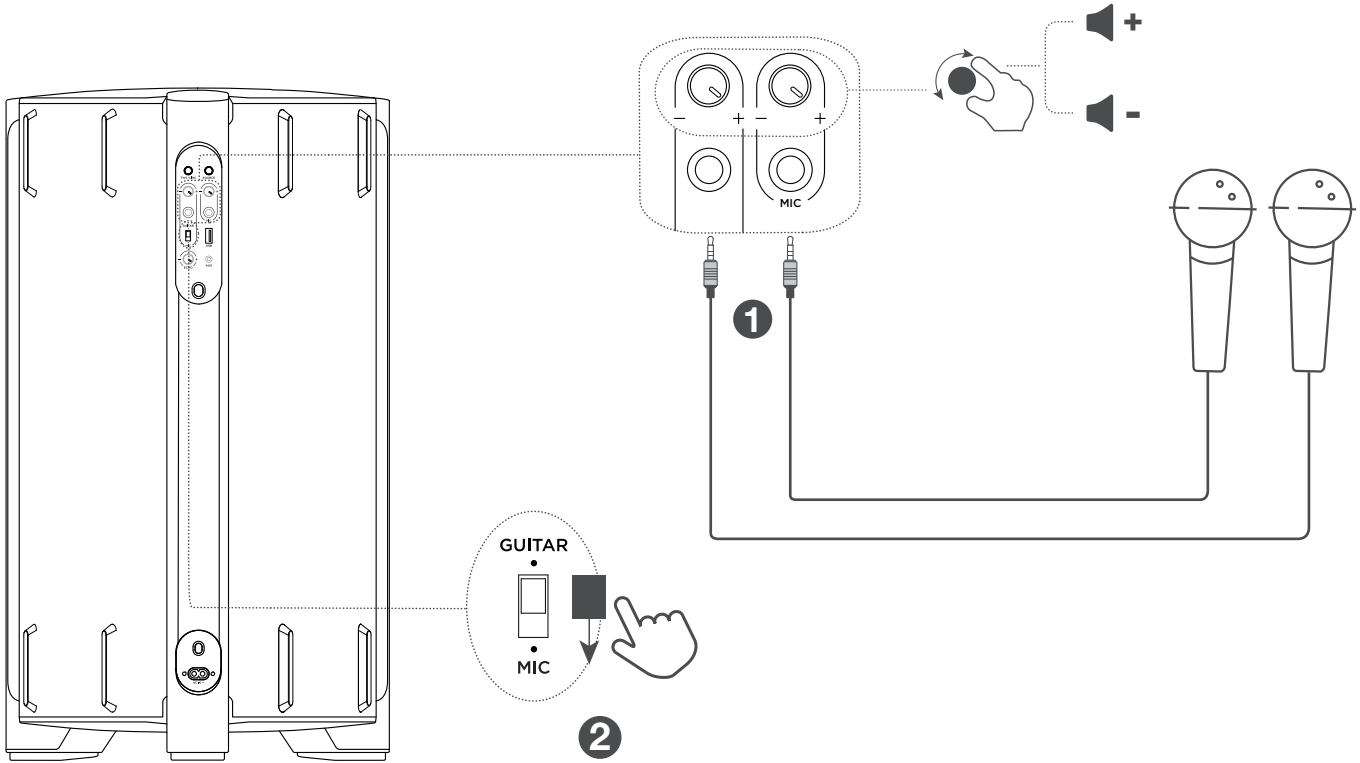

6b

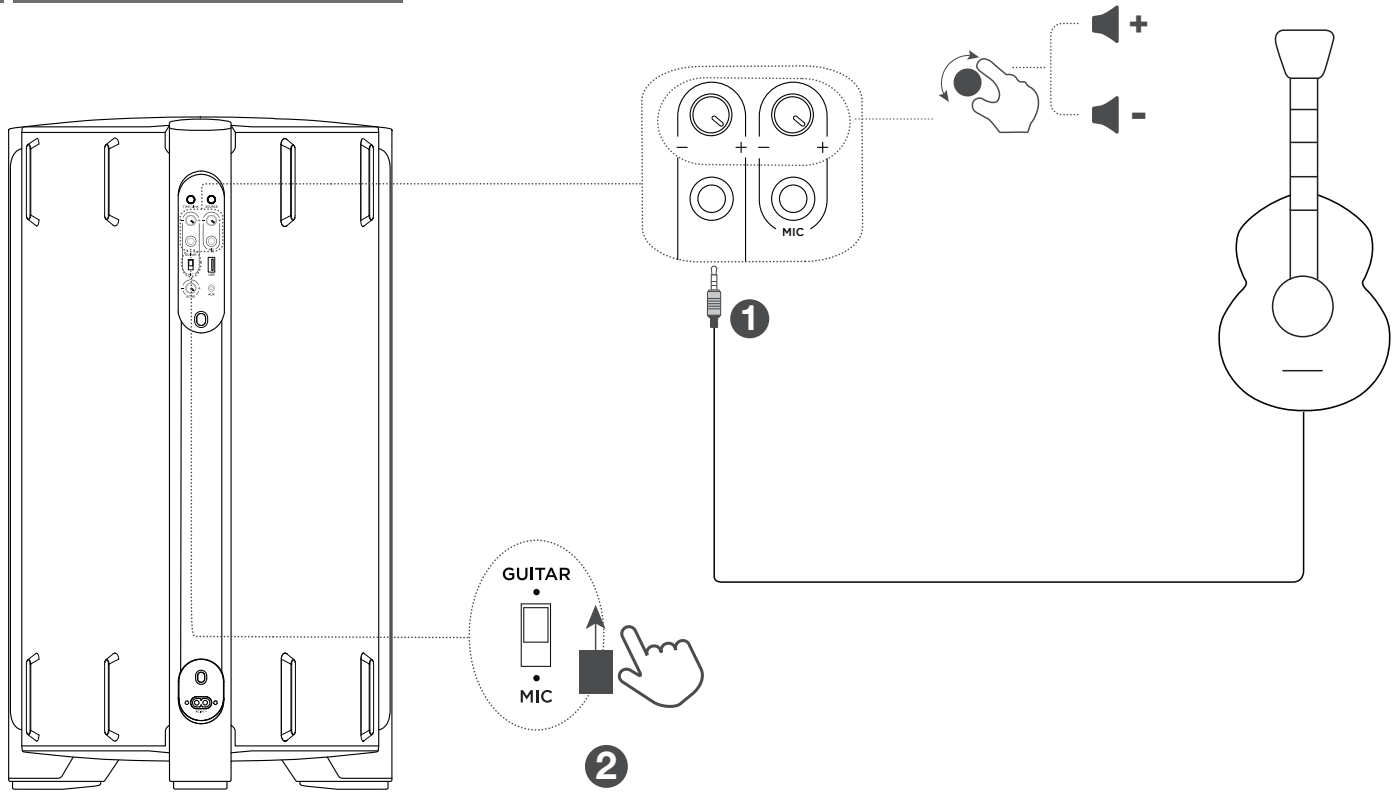

DO NOT RETURN TO STORE

WE ARE READY TO HELP

contact us first with any questions

TCL SUPPORT:
www.tcl.com

TAKE CARE WHEN REMOVING THE PARTY SPEAKER

Bluetooth®

The Bluetooth® word mark and logos are registered trademarks owned by Bluetooth SIG, Inc. and any use of such marks by TTE Corporation is under license. Other trademarks and trade names are those of their respective owners.

Copyright © 2025 TCL.
All rights reserved.
TP200K-GL-QSG_V0.5

Important Safety Instructions

Make sure you read all the safety information before you use this product.

TCL Overseas Marketing Limited bears no responsibility for accidents or damages caused by unauthorized changes, modifications or improper use of the product.

CAUTION
RISK OF ELECTRIC SHOCK
DO NOT OPEN

CAUTION: TO REDUCE THE RISK OF ELECTRIC SHOCK, DO NOT REMOVE COVER (OR BACK). NO USER-SERVICEABLE PARTS INSIDE. REFER SERVICING TO QUALIFIED SERVICE PERSONNEL.

The lightning flash with arrowhead symbol, within an equilateral triangle is intended to alert the user to the presence of uninsulated dangerous voltage within the product's enclosure that may be of sufficient magnitude to constitute a risk of electric shock.

The exclamation point within an equilateral triangle is intended to alert the user to the presence of important operating and maintenance (servicing) instructions in the literature accompanying the product.

This symbol indicates that this product incorporates double insulation between hazardous main voltage and user accessible parts. When servicing, use only identical replacement parts.

Warnings

- To reduce the risk of fire or electric shock, do not expose this product to rain or moisture. This product should not be exposed to dripping or splashing. No objects filled with liquids, such as vases, should be placed on or near the product.
- The product is unstable if it is not properly placed or mounted to the wall. Be sure to follow the wall mounting instructions provided in the user manual to ensure your safety.

Safety

- **Read these instructions -** Read all the safety and operating instructions before operating the product.
- **Retain these instructions -** Retain the safety and operating instructions for future reference.
- **Heed all warnings -** Adhere to all warnings on the product and in the operating instructions.
- **Follow all instructions -** Follow all operating and use instructions.
- **Do not use this apparatus near water -** The appliance should not be used near water or moisture – for example, in a wet basement or near a swimming pool and the like.
- **Clean only with a dry cloth.**
- **Do not block any ventilation openings.** Install in accordance with the manufacturer's instructions.
- **Do not install near any heat sources** such as radiators, heat registers, stoves, or other apparatus (including amplifiers) that produce heat.
- **Do not defeat the safety purpose** of the polarized or grounding-type plug. A polarized plug has two blades with one wider than the other. A grounding type plug has two blades and a third grounding prong. The wide blade or the third prong are provided for your safety. If the provided plug does not fit into your outlet, consult an electrician for replacement of the obsolete outlet.
- **Protect the power cord** from being walked on or pinched particularly at plugs, convenience receptacles, and the point where it exits from the product.
- **Use only attachments/accessories** specified by the manufacturer.
- **Use only with the cart**, stand, tripod, bracket, or table specified by the manufacturer, or sold with the apparatus. When a cart is used, use caution when moving the cart/apparatus combination to avoid injury from tip-over.

- **Unplug this apparatus** during lightning storms or when unused for long periods of time.
- **Refer all servicing** to qualified service personnel. Servicing is required when the apparatus has been damaged in any way, such as power-supply cord or plug damaged, liquid has been spilled or objects have fallen into the apparatus, the apparatus has been exposed to rain or moisture, does not operate normally, or has been dropped.

Cautions

- To prevent electric shock, match wide blade of plug to wide slot, fully insert.
- Do not place any sources of danger on the product (for example: liquid filled objects, lighted candles).
- Disconnect the power cord to shut off when find trouble or not in use. The power cord shall be readily operable.
- Use of controls or adjustments or performance of procedures other than those described herein, may result in hazardous radiation exposure or other unsafe operation.
- The power cord/appliance coupler is used as the disconnect device, the disconnect device must remain readily operable.
- The rating label is located at the bottom or back of the product.
- The use of apparatus in tropical and moderate climates.

Disposal of your old product

Your product is designed and manufactured with high quality materials and components, which can be recycled and reused.

This product may contain lead and mercury. Disposal of these materials may be regulated due to environmental considerations. For disposal or recycling information, please contact your local authorities.

English

Compliance notice

Notice for US

FCC Information

Warning

- *Changes or modifications to this unit not expresslyapproved by the party responsible for compliance could void the user's authority to operate the equipment.*
- To maintain compliance with the RF exposure guidelines, place the product at least 20cm from nearby persons.

Note

- This equipment has been tested and found to comply with the limits for a Class B digital device, pursuant to Part 15 of the FCC Rules. These limits are designed to provide reasonable protection against harmful interference in a residential installation. This equipment generates, uses and can radiate radio frequency energy and, if not installed and used in accordance with the instructions, may cause harmful interference to radio communications. However, there is no guarantee that interference will not occur in a particular installation.

If this equipment does cause harmful interference to radio or television reception, which can be determined by turning the equipment off and on, the user is encouraged to try to correct the interference by one or more of the following measures:

- Reorient or relocate the receiving antenna.
- Increase the separation between the equipment and receiver.
- Connect the equipment into an outlet on a circuit different from that to which the receiver is connected.
- Consult the dealer or an experienced radio / TV technician for help.

To assure continued compliance, any changes or modifications not expressly approved by the party responsible for compliance could void the user's authority to operate this equipment. (Example- use only shielded interface cables when connecting to computer or peripheral devices).

This device complies with Part 15 of the FCC Rules. Operation is subject to the following two conditions:
(1) this device may not cause harmful interference, and
(2) this device must accept any interference received, including interference that may cause undesired operation.

FCC Radiation Exposure Statement: This equipment complies with FCC radiation exposure limits set forth for an uncontrolled environment. This equipment should be installed and operated with a minimum distance of 20cm between the radiator and your body.This transmitter must not be co-located or operated in conjunction with any other antenna or transmitter.

WARNING: Changes or modifications made to this equipment not expressly approved by TCL Corporation may void the FCC authorization to operate this equipment.

Notice for Canada

Class B Clause

This digital apparatus does not exceed the Class B limits for radio noise emissions from digital apparatus as set out in the Radio Interference Regulations of the Canadian Department of Communications.

This Class B digital apparatus complies with Canadian ICES-003

This device contains licence-exempt transmitter(s)/receiver(s) that comply with Innovation, Science and Economic Development Canada's licence-exempt RSS(s). Operation is subject to the following two conditions:
1）This device may not cause interference.
2）This device must accept any interference, including interference that may cause undesired operation of the device.

CAN ICES (B) / NMB (B)

IC Radiation Exposure Statement

This equipment complies with Canada radiation exposure limits set forth for uncontrolled environments. This transmitter must not be co-located or operating in conjunction with any other antenna or transmitter.

Warning: The user is cautioned that changes or modifications not expressly approved by the party responsible for compliance could void the user's authority to operate the equipment.

Français

Avis de conformité

Avis pour les États-Unis

Informations sur la FCC

Avertissement

- *Les changements ou les modifications sur cet appareil non expressément approuvés par la partie responsable de la conformité pourraient invalider l'autorité de l'utilisateur pour manipuler l'équipement.*
- *Pour rester en conformité avec les consignes d'exposition aux RF, placez le produit à au moins 20 cm des personnes proches.*

Remarque

- Cet équipement a été testé et déclaré conforme aux limites imposées aux appareils numériques de classe B, conformément à la section 15 du règlement de la FCC. Ces limites sont conçues pour fournir une protection suffisante contre les interférences préjudiciables dans une installation résidentielle. Cet équipement génère, utilise et peut émettre de l'énergie radioélectrique et, s'il n'est pas installé et utilisé conformément aux instructions fournies, peut produire des interférences affectant les communications radio. Cependant, rien ne garantit que des interférences ne se produiront pas dans certaines installations.

Si cet équipement génère des interférences préjudiciables à la réception de signaux radio ou de télévision (ce qui peut être constaté en éteignant puis en rallumant l'appareil), nous conseillons à l'utilisateur d'essayer une ou plusieurs des mesures suivantes pour tenter de corriger le problème :

- Réorienter ou déplacer l'antenne de réception.
- Éloigner davantage le récepteur de l'équipement.
- Brancher l'équipement sur une prise de circuit différente de celle sur laquelle le récepteur est branché.
- Consulter le revendeur ou un technicien qualifié spécialisé en équipements radio/de télévision.

Pour garantir la conformité continue, tout changement ou modification non expressément approuvé par la partie responsable de la conformité peut annuler l'autorité de l'utilisateur à utiliser cet équipement. (Exemple : utilisez uniquement des câbles d'interface blindés lors de la connexion à un ordinateur ou à des périphériques).

Cet appareil est conforme à la section 15 de la réglementation de la FCC. Le fonctionnement est soumis aux deux conditions suivantes:
(1) cet appareil ne doit pas causer d'interférences nuisibles, et
(2) Cet appareil doit accepter toutes les interférences reçues, y compris celles susceptibles de provoquer un fonctionnement indésirable.

Déclaration de la FCC sur l'exposition aux rayonnements : Cet appareil est conforme aux limites de la FCC sur l'exposition aux rayonnements définies pour un environnement non contrôlé. Cet équipement doit être installé et utilisé avec une distance minimale de 20 cm entre le radiateur et votre corps. Cet émetteur ne doit pas être placé au même emplacement ni être utilisé avec toute autre antenne ou tout autre émetteur.

AVERTISSEMENT : Les modifications apportées à cet équipement non expressément approuvées par TCL Corporation peuvent annuler l'autorisation de la FCC d'utiliser cet équipement.

Avis pour le Canada

Clause de classe B

Cet appareil numérique ne dépasse pas les limites de classe B relatives aux émissions de bruit radioélectrique émises par un appareil numérique, telles que définies dans le Règlement sur les interférences radio du ministère des Communications du Canada.

Cet appareil numérique de classe B est conforme à la norme canadienne ICES-003.

L'émetteur/récepteur exempt de licence contenu dans le présent appareil est conforme aux CNR d'Innovation, Sciences et Développement économique Canada applicables aux appareils radio exempts de licence. L'exploitation est autorisée aux deux conditions suivantes :

1）L'appareil ne doit pas produire de brouillage;

2）L'appareil doit accepter tout brouillage radioélectrique subi, même si le brouillage est susceptible d'en compromettre le fonctionnement.

CAN ICES (B) / NMB (B)

Déclaration IC relative à l'exposition aux rayonnements

Cet appareil est conforme aux limites canadiennes sur l'exposition aux rayonnements définies pour des environnements non contrôlés. Cet émetteur ne doit pas être situé au même endroit ou fonctionner en conjonction avec une autre antenne ou un autre émetteur.

Attention : le droit de l'utilisateur de faire usage de l'appareil peut être annulé par des modifications ou changements non approuvés expressément par l'entité en charge de la conformité de l'appareil par rapport aux normes.