To the 2-in-1 Treadmill."
Your Ultimate Guide MANUAL

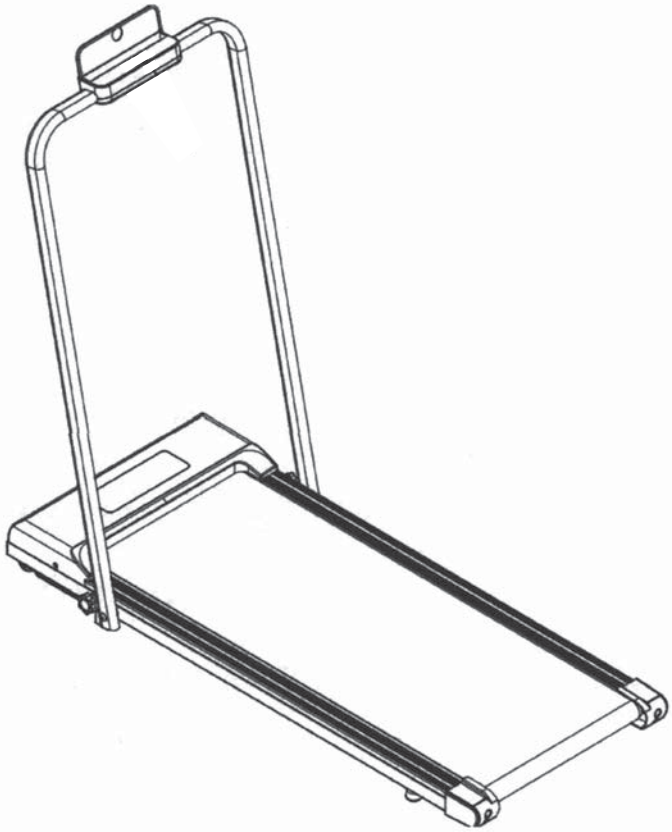

"the entire manual should be carefully read before

"use/start using" your new treadmill." ☺

Contents:

- Product Instruction Contents.....1
- Safety Precautions and Warnings.....2
- Parameters and Packing List.....5
- Remote Control Instructions.....5
- Exercise Advice and Plan.....7
- Instruction Manual.....8
- Maintenance Guidelines.....8
- Common Malfunctions and Solutions.....11

Product Instructions

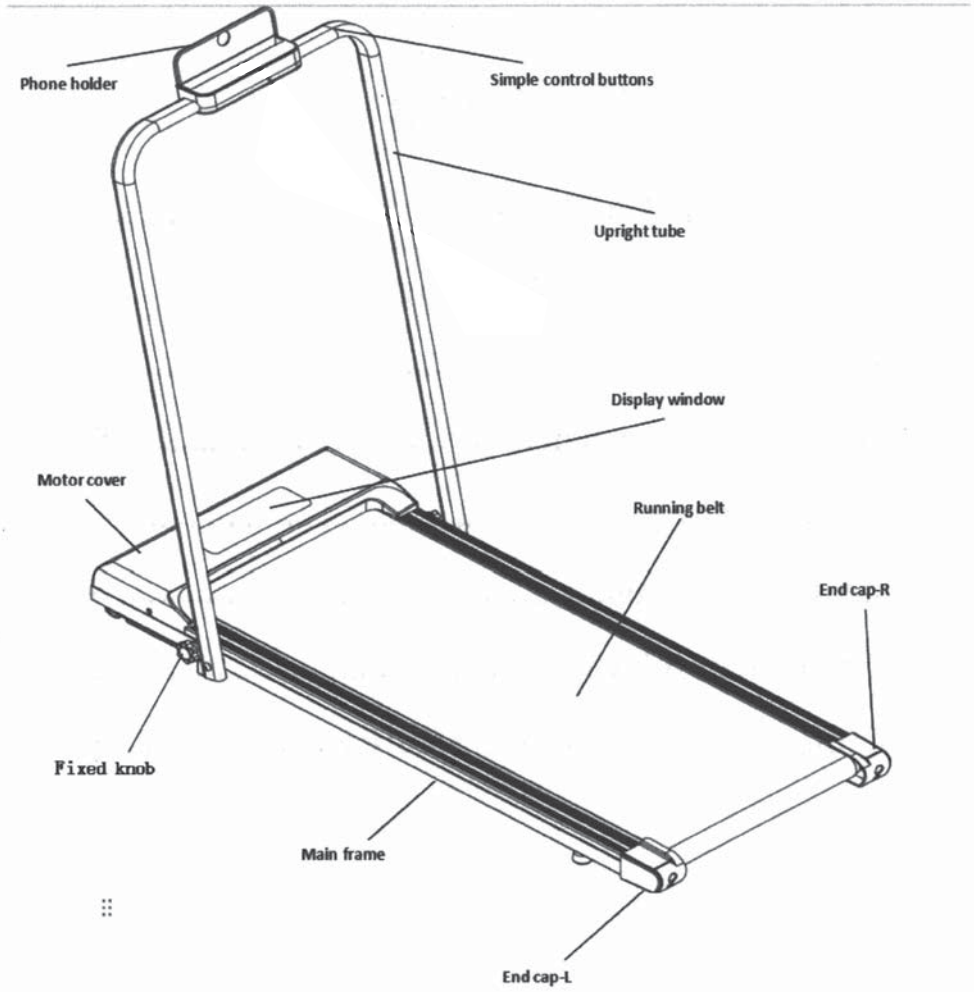

Revised sentence: Safety Precautions and Warnings

Caution! Please carefully read this manual before using the product and take note of the following issues:

* This treadmill is intended for indoor use only. Do not expose it to water or other liquids, and do not place any objects on top of it.

* Always wear appropriate sports gear and warm up properly before using the treadmill. Never use it barefoot.

* The power plug must be grounded, and a dedicated circuit should be used. Do not share a circuit with other electrical equipment.

* Keep children away from the treadmill to prevent accidents.

* Avoid overloading or prolonged use of the treadmill as this can significantly shorten its lifespan. Regular maintenance is necessary to keep it in good condition.

* Reduce dust accumulation and maintain proper humidity levels indoors to prevent electronic devices from being affected by static electricity interference.

* Always turn off the treadmill after use, ensure adequate air circulation during operation, stop exercising if you feel uncomfortable, and consult your doctor if necessary. Warning: To avoid accidents or injury, please observe the following precautions:

* Check that your sports gear is secure with no loose zippers or hanging strings that could get caught in the machine's moving parts.

* Do not put anything near heat sources that could damage power cords or cause fires.

* Keep children away from treadmills at all times; never let them play on or around them unsupervised!

* Unplug treadmills before moving them; never attempt disassembly unless you are a professional technician trained in maintaining these machines.

* The treadmill can only be used in a 20A circuit.

"The equipment is designed for single use only, and should not be used by multiple individuals simultaneously. If you experience symptoms such as dizziness, chest pain, nausea or shortness of breath during exercise, please discontinue immediately and seek advice from your fitness instructor or physician."

Warning! Must Follow!

Please consult your doctor if you are under therapy or have any of the following issues:

1. If you are suffering from waist pain or hurt your leg, waist or neck before, or have perceived obstacles to your leg, waist, neck and hand (also include disc herniation, spondylolisthesis, cervical protrusion)
2. Deformed arthritis, rheumatism, gout
3. Osteoporosis or bone abnormality
4. Circulatory system disorder (heart disease, vascular disease, high blood pressure)
5. Respiratory organs disorder.
6. Implant cardiac pacemakers or electronic equipment.
7. Malignant tumor
8. Thrombosis, serious arterial lipoma, acute venous lipoma, and other blood circulation diseases or skin infections.
9. Perceived obstacle caused by diabetes.
10. Wounded on skin
11. Sick or fever (38℃ or higher temperature)
12. Spine abnormality or bending
13. Pregnant women or women are in the menstrual period
14. Unhealthy and need rest
15. Obvious condition
16. For physical recovery purposes
17. Other bad feelings besides the situations above, may cause the unexpected condition

*Please stop doing exercise if you feel waist pain, dizziness, palpitations or other abnormal feeling, consult your fitness coach or doctor

*Do not let kids use this product. Kids should be kept away from this product, or it may cause unexpected hurting risk

*Please make sure no other people or pets are around the product when taking, packing or sliding it

Forbidden!

*Never use if you find the shell is broken and off (inside parts are exposed) or the welding point is broken. Or it may cause unexpected conditions.

*Never jump on and off the product when you are using it, it may cause falling and injured

*Never store the product outdoors, near the bathroom, or any place where is damp

*Never use or store the product under direct sunlight, near the stove, electric blanket or other

heating supply equipment, or it may cause an electric shock or fire accident.

*Never use the product when you find the power cord or plug is broken or the socket is slack, or it may cause electric shock, short circuit, or fire accident.

*Never use the product with two or more people at the same time, keep others away when using this product, or it may cause unexpected situations or falling accidents.

*Never use the product if the user can not express self-consciousness or can not operate the product by himself/herself. Or it may cause unexpected situations.

*Keep the product away from water or other liquid, especially the main base. Or it may cause electric shock or fire accidents.

*Never do intense exercise if you don't exercise usually. Do not use it after meals, fatigue, or other uncomfortable state, or it may be harmful to your health.

*This product is only for home use, never use it at school, stadium or other public place, or it may cause unexpected situations.

*Never use the product if you are eating or doing other behaviors, also never use it after drinking, or it may cause an accident or injury.

*Never take your watch, bracelet, mobile phone and other valuable objects with you to avoid damage, also Take off your keys and knife to avoid hurting yourself.

*Please check the power cord whether there is a needle, garbage or other wet things before using it to avoid electric shock, short circuit or fire accident.

*Never touch the plug with a wet hand to avoid electric shock.

*Please turn the power switch to the off position and unplug the plug if do not use it for a period to avoid electricity shock or fire accidents caused by insulation deterioration.

*Pull out the power plug!

When not in use, pull out the power plug from the socket.

—Because dust and moisture will degrade the insulation, which will lead to leakage fire.

Grounding explanation !

* This product must be grounded, it can greatly reduce the risk of electricity shock when the product is in malfunctions.

* The plug of this product is grounding standard, please use a local legal grounding power source to connect the product.

Dangerous !

* It may cause electricity shock if the product is not grounding properly. please ask a professional electrician to check if you are not sure whether the grounding is correct. Never modify the plug if it can not fit your power source, please ask a professional electrician to install a proper power source.

*Never use a transfer plug, this product must connect to a power source with a grounding function.

Parameter and Packing List

Parameters			Packing List		
NO.	Parameter Name	Description	NO.	Name	Quantity
1	Input Voltage	AC110V/ 50Hz	1	Main body	1
2	peak power	2.5HP	2	Remote control	1
3	Speed Range	1-8km/h	3	Allen Wrench	1
4	Running Belt Area	390*1030(mm)	4	Silicone Oil	1
5	Maximum Load	120 kg	5	Manual	1
6	Expanded Dimension	1210*550*950mm	6	Safety lock	Optional type
7	N.W/G.W	21 / 25Kg			
8	Functions	Walking/Running			

Assembly Instructions

Installation steps of standpipe :

1 . place the product on the floor after taking out the product from the packing box.

2. Raise the standpipe until it stands still Tighten the screw to fix the handrail. (tighten the screw in a clockwise direction, Loosen the screws in an anticlockwise direction when dismantlement is needed)

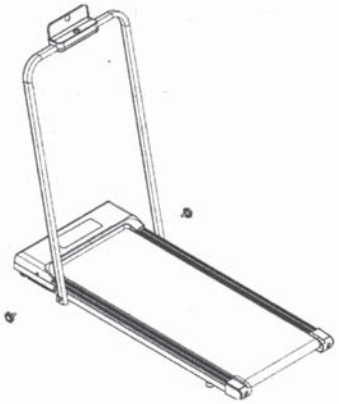

3. Plug in the power supply, turn it on, and use the remote control to start up and adjust the speed.
4. Place the safety lock on the yellow area of the panel.(Optional type)

Exercise advice and plan

***Warm up** do warm-up exercises for 5-10 minutes before using this product

***Breath** do not hold your breath when you are using this product, try to breathe by the nose and coordinate with your movement. you should stop if your breath is too hasty.

***Exercise frequency** muscle should rest for 48 hours after exercise

***Intensity** it depends on different individuals, please increase the intensity gradually, the fatigue can be cured under the situation.

***Diet** To protect the digestive system, please use this product 1 hour after a meal, also do not take any food half an hour after exercise, Try to not drink not too much water when exercising to reduce visceral burden.

***Stretching Exercises** No matter what speed you run, stretching exercise is necessary firstly, it can improve muscle activity and reduce the risk of sports injuries. So you can follow the guidance below after warming up, 5 times for each pose, and do it again after exercise.

1. Stretch down bend down relax your shoulder and back then try to touch your feet, 3 times (Picture 1)
2. Stretch legs sit on a mat, and stretch one leg and keep the other to stay balanced then try to touch your toes on the straight leg, and stay the Pose for 10-15 seconds then repeat to the other leg, 3 times (picture 2)
3. Stand and put your hands on the wall or table, then push your body down and stay 10-15 seconds, 3 times for each leg (picture 3)
4. Ankle joint stretch Stand and hold something to keep balance, then pull one ankle to your buttocks until you feel tense in your leg muscle, stay 10-15 seconds, 3 times for each leg (picture 4)
5. Thigh stretch sit and keep feet against, then pull feet to the groin, stay 10-15 seconds, and do it 3 times (picture 5)

Instruction manual

***Brief introduction**

It is an easy-operating machine, it does not require complicated operation instructions:

Treadmill related : speed

Sports related : distance, calorie, time

***LED digital display**

1. TIME
2. DISTANCE
3. SPEED
4. CALORIE

***Function keys**

1. Start key/stop key
2. Speed "+" " -" key
3. 3km/h and 6km/h speed switch key
4. The M button can be set to a predetermined value before the treadmill starts

Parameter

5. Voltage : 110V/ 50Hz
6. Minimum speed : 1km/h
7. Maximum speed : 8km /h

Safety warning

In any case, when the safety lock is removed, screen window will display: E7 (it indicates the safety lock removed)

Maintenance

LUBRICATING YOUR TREADMILL

1. After using the running belt for some time, it is necessary to lubricate your treadmill.

The recommended lubrication time is:
Lubricating once every 5 months for the use of fewer than 3 hours per week.
Lubricating once every 2 months for the use of 4-7 hours per week.
Lubricating once every month for the use of more than 7 hours per week.

WARNING: Always unplug the treadmill from the electrical outlet before cleaning, and lubricating the unit. Check whether lubrication is required Grasp the running belt, and touch the back center areas of the running belt as much as possible, if there is oil on the belt (or it feels a little wet), it means no lubrication is needed. If you feel that the running board is dry and there is no oil on your hand, you need to add oil to lubricate the treadmill.

HOW TO LUBRICATE: Raise the Running Belt up on one side and apply lubricant to the Running Board. Use a rag to thoroughly wipe the lubricant over the Running Board. Repeat this process for the other side.

2. The moving parts should turn freely and quietly. The abnormality of moving parts will affect the safety of the equipment. Inspect and tighten all bolts regularly.
3. To better maintain the treadmill and prolong its lifespan, it is suggested that maintenance be done on a regular basis.
4. DO NOT LOOSEN OR MAKE ANY ADJUSTMENTS TO THE RUNNING BELT WHILE APPLYING LUBRICANT. A loose Running Belt will result in the runner sliding off during use, while too tight of a Running Belt will negatively affect the motor performance and also create more friction between the roller and the running Belt.

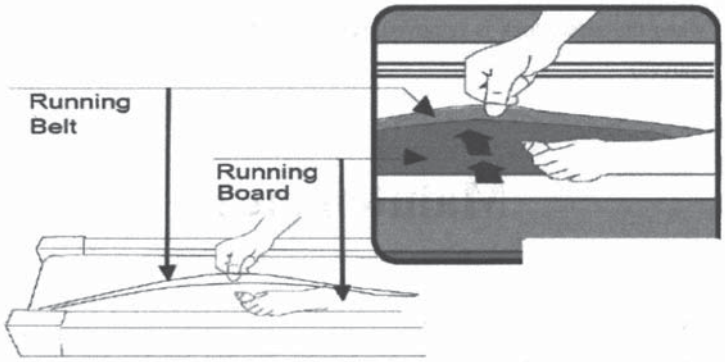

ELASTIC TENDENCY ADJUSTMENT OF RUNNING BELT

Every treadmill would set the elastic tendency before it leaves the factory and after assembly, but it will become loose after use for a period.

Just like it will be stuck or slide sometimes, you can turn the adjusting bolt in a clockwise direction, and semi-circle a time (left and right at the same time) to adjust the running belt. Don't make it too loose or too tight, or the running belt will slide or make the motor overload .

RUNNING BELT DEVIATING

There are some factors cause this situation :

A: the treadmill is not placed on the flat floor

B: User does not step on the center of the running belt

Just setting the treadmill flat and running idly will solve the issue:

If the deviating still exists, you can adjust it with a 6mm Allen wrench in a quarter turn. Deviating is out of warranty. Users can maintain it by the instructions below: Please fix it as soon as you find the problem or it will break the running belt.

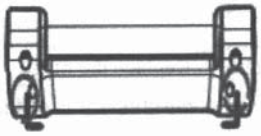

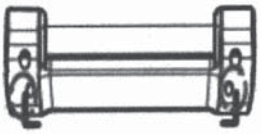

If the belt is off-center to the LEFT,

turn the left adjusting bolt ¼ turn clockwise or the right adjusting bolt ¼ turn counterclockwise

which moves the running belt to the right.

If the belt is off-center to the RIGHT,

turn the left adjusting bolt ¼ turn counterclockwise or the right adjusting bolt ¼ turn clockwise

which moves the running belt to the left.

A: Turn the screw in a clockwise direction with an Allen wrench

B: Adjust the intensity, when the running belt will not slide during load is ok (clean the debris between belt ditch and belt wheels)

Common malfunction and solution

Malfunction		Error judgment	Solution
Treadmill can not work		unplug	Plug the power cord
		Single wire or power supply broken	Check signal wire
		Switch off	Switch on
Running belt does not move smoothly		Not enough lubricating	Lubricate with silicone oil
		Running belt is too tight	Adjust the intensity of the running belt
Malfunction	**Error**	**Error judgment**	**Solution**
E1	Connection error	1. The interface of the upper and lower control main connection lines is loose;	1. Reinforce the cable interface;
		2. The main connection line of the upper and lower control is damaged;	2. Replace the main connecting cable of the upper and lower control;
		3. The monitor is damaged;	3. Replace the monitor;
		4.The controller is damaged;	4. Replace the controller;
E2	Motor damaged	1. The motor wire is not connected or loose;	1.Reinforce the motor cable;
		2. The motor is damaged;	2. Replace the motor;
		3. The controller is damaged;	3. Replace the controller;
E5	Over-current protection	1. Excessive load;	1. Reduce the load and try not to exceed the rated load;
		2. The motor or roller is stuck with foreign objects;	2. Remove the stuck object;
		3. The roller is not	3. Add lubricant;

		lubricated enough, and the resistance increases;	
		4. The motor is damaged and the resistance increases	4. Replace the motor;
E6	Motor over-voltage protection	The user's power grid or voltage is unstable, and the peak voltage is too high	Add an external filter regulator;
E7	Safety lock falls off	Safety lock falls off	Place the safety lock on yellow area of the panel

Remote Control Description

Attention:
The plastic sheet must be removed before use

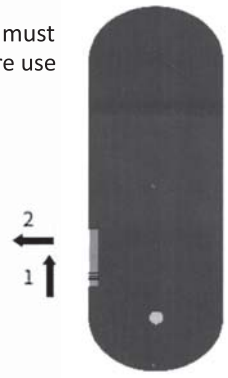

Attention:
Open the battery rear cover

1、First place one hand in this groove and apply force in thisdirection

2、At the same time, place the other handon the raised pattemand apply force in this direction

Remote Control Key Description

a. Home:

Press the Home key to go back to start menu.

b. Speed increase:

in the settingstate, the button will increase the setting value; When the motor is running, the button increases speed and automati cally increases when held for more than 2 seconds.

c. Speed reduction:

in the setting state, the key will reduce the set Value. When the motor is running, the button will decrease the speed and automatically decrease when held for more than 2 seconds

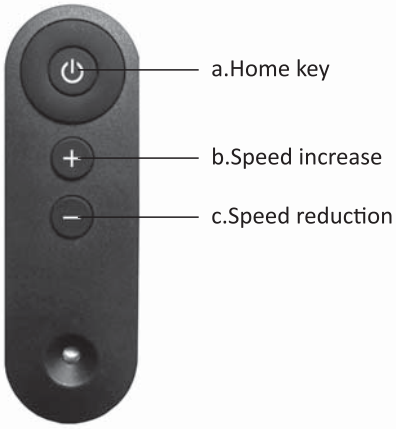

The principle of remote control communication
The remote control is based on RF communication and uses a communication frequency of 433MHz with an antenna gain of 3dBi.

FCC Statement:

This device complies with part 15 of the FCC Rules. Operation is subject to the following two conditions:

(1) This device may not cause harmful interference, and

(2) this device

must accept any interference received, including interference that may cause undesired operation.

This equipment has been tested and found to comply with the limits for a Class B digital device, pursuant to part 15 of the FCC Rules. These limits are designed to provide reasonable protection against harmful interference in a residential installation. This equipment generates, uses and can radiate radio frequency energy and, if not installed and used in accordance with the instructions, may cause harmful interference to radio communications. However, there is no guarant ee that interference will not occur in a particular installation. If this equipment does cause harmful interference to radio or television reception, which can be determined by turning the equipment off and on, the user is encouraged to try to correct the interference by one or more of the following measures:

—Reorient or relocate the receiving antenna.

—Increase the separation between the equipment and receiver.

—Connect the equipment into an outlet on a circuit different from that to which the receiver is connected.

—Consult the dealer or an experienced radio/TV technician for help.

Caution: Any changes or modifications not expressly approved by the party responsible for compliance could void the user's authority to operate the equipment.

This equipment complies with FCC radiation exposure limits set forth for an uncontrolled environm ent. This transmitter must not be co-located or operating in conjunction with any other antenna or transmitter.