GPSENKE

Industrial AP/Client 733Mbps Dual-Band

GP-AG500 Series

INDUSTRIAL NETWORK SOLUTION SPECIALIST
WWW.GPSENKE.COM

Introduction

GP-AG500 Series is a high-performance wireless client designed for industrial WLAN applications. It utilized IEEE 802.11a/b/g/n/ac standard, support 2.4GHz &5GHz Dual-band with data rates up to 733Mbps. It designed with industrial-grade chipset, support surge, ESD and vibration resistance protection.

GP-AG500 Series can be installed on any device that requires wireless connectivity under “Client Mode”. It supports millisecond-level GP Roaming,offers seamless and rapid wireless roaming with none-package loss.

Meanwhile, it ensures quick handoffs between 2.4GHz and 5GHz based on specific scenario needs. GP-AG500 is particularly designed robot control system, intellegent Warehousing, AGVs system, power plant inspections.

Main Feature

- Support 802.11 b / g / n / ac Standard
- Support 802.11 Wave1 (2-Stream), speed up to 733Mbps
- Support MAC Address Clone
- Support Millisecond Switching & GP Roaming
- Support IPv4/IPv6
- Support Dual Gigabit-RJ45 Ethernet
- Support RS232/485 Serial Port
- Support MU-MIMO
- Support Open System, Shared Key, WPA, WPA-PSK, WPA2-Enterprise, WPA2-PSK
- Support DC9-48V Power Supply
- Support IP40 Protection-Level
- Support -40℃～ 80℃ Working Temperature

Software Parameter

WLAN	Frequency Band	2.4GHz	5GHz
	Channel Bonding	40MHz(Not Recommed)	80MHz
	MU-MIMO	Support	Support
	OFDMA	Support	Support
	TWT	Support	Support
	433Mbps(PHY)	NA	Support
	300Mbps(PHY)	Support	NA
	A-MPDU	Support	Support
	MLD	Support	Support
	MRC	Support	Support
	STBC	Support	Support
	LDPC	Support	Support
	MAX Virtual AP	Single Band-- Support 16 Virtual AP	
	Max Access Users	128 (Influenced by Environment Fators)	
	Max Access Spend	2.4GHz: 300Mbps 5GHz: 433Mbps	
	RTS/CTS	Support	
	CTS-to-self	Support	
	Hidden SSID	Support	
	Terminal Aging/Heartbeat Detection	Support	
Working Mode	AP Mode	Brigde Mode(LAY2) Router Mode(LAY3)	
	Client Mode	Support Client Mode Support MAC Address Clone	
Roaming	Roaming Switch	Support 802.11k, 802.11v, 802.11r	
		LAY2/LAY3 Roaming	
RF	Load Balancing	Load balancing is supported based on the number of users and user traffic	
	5G Priority	Support	
	Automatic Channel Selection	Support	
	Automatic Power Regulation	Support	
	Intelligent Speed Select	Support	
	Time Fair Scheduling	Support	

Security	Encryption	Support 64/128 bit WEP、Dynamic WEP、TKIP、CCMP encryption
	Authentication Method	Cooperate With AC Support WPA、WPA-PSK、WPA2- Enterprise、WPA2-PSK、WPA3、MAC address Verify、Web Verify、PPPoE Verification and etc Methods
	LAY2 Isolation of Wireless Users	Support
	wIDS	Support
AAA	RadiusClient	Support
	Authentication Server Multi-domain configuration	Support
	Authentication Server Backup	Support
LAY2/LAY3	IP Address	Static IP and DHCP dynamically obtain addresses
	IPv6	Support
	ACL	Support
	DHCP server	Support (Router Mode)
	NAT	Support (Router Mode)
Service Quality	WMM(802.11e)	Support
	Priority Mapping	Support
	QoS Policy Mapping	Support
	Bandwidth Managed	Support Bandwidth Speed Limitation based on SSID and Users
	Call Admission Control（CAC）	Support
Maintenance	Network Management	SNMPV1/V2c/V3、Trap、Telnet、FTP/TFTP、WEB

Hardware Parameter

Size		81mm × 35mm× 100mm
Port	Ethernet	2× 10/100/1000Base-T RJ45 Port
	Antenna	2 × RPSMA-K Antenna Port (External Antenna--Optional)
	Serial	1×RS232/485
Working Band	2.4G	802.11 n/g/b: 2.4GHz-2.483GHz (CHINA)
	5G	802.11 ac/n/a: 5.150GHz-5.250GHz 5.725GHz-5.850GHz (CHINA)

Modulation Technology	OFDM：BPSK@6/9Mbps、QPSK@12/18Mbps、16-QAM@24Mbps、64-QAM@48/54Mbps DSSS：DBPSK@1Mbps、DQPSK@2Mbps、CCK@5.5/11Mbps MIMO-OFDM （11n）：MCS 0-15 MIMO-OFDM （11ac）：MCS 0-9
Modulation Method	11b：DSS:CCK@5.5/11Mbps,DQPSK@2Mbps,DBPSK@1Mbps 11a/g OFDM:64QAM@48/54Mbps,16QAM@24Mbps, QPSK@12/18Mbps,BPSK@6/9Mbps 11n：MIMO-OFDM:BPSK,QPSK,16QAM,64QAM 11ac/ac wave2：MIMO-OFDM:BPSK,QPSK,16QAM,64QAM,256QAM
MAX Transmit Power	16.16dBm
Adjustable Granularity	1dBm
Operating Temperature	-40°C ～ 75°C
Storage Temperature	-40°C ～ 85°C
Operating Humidity	0%~95%(Non-condensing)
IP Protection Level	IP40
Power Supply	DC9V-48V Power Supply
Consumption(Client5.8G)	≤12W
MTBF	>250000H
CE	IEC 61000-4-2 ESD: Contact: 8 kV; Air: 15 kV IEC 61000-4-3 RS: 80 MHz to 1 GHz: 3 V/m IEC 61000-4-4 EFT: Power: 2 kV; Signal: 2 kV IEC 61000-4-5 Surge: Power: 2 kV; Signal: 1 kV IEC 61000-4-6 CS: 3 V IEC 61000-4-8 PFMF

Size Design

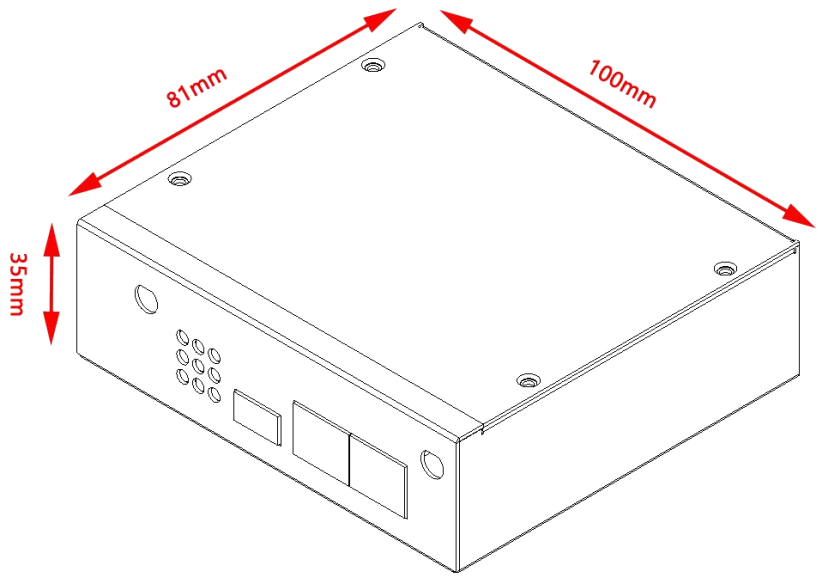

Appearance & Accessories

Packing*1

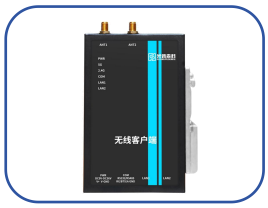

Device*1

Rubber Duck Antenna*2

Manual*1

Model Selection

Model	GP-AG500-3D-232	GP-AG500-5D-232	GP-AG500-3D-485	GP-AG500-5D-485
Speed	733M			
GP-Q8203-RPS-J 3dbi	●	○	●	○
GP-Q8205-S-J 5dbi	○	●	○	●
RS232	●		○	
RS485	○		●	

FCC Statement

This equipment has been tested and found to comply with the limits for a Class B digital device, pursuant to part 15 of the FCC Rules. These limits are designed to provide reasonable protection against harmful interference in a residential installation. This equipment generates, uses and can radiate radio frequency energy and, if not installed and used in accordance with the instructions, may cause harmful interference to radio communications. However, there is no guarantee that interference will not occur in a particular installation. If this equipment does cause harmful interference to radio or television reception, which can be determined by turning the equipment off and on, the user is encouraged to try to correct the interference by one or more of the following measures:

•Reorient or relocate the receiving antenna.
•Increase the separation between the equipment and receiver.
•Connect the equipment into an outlet on a circuit different from that to which the receiver is connected.
•Consult the dealer or an experienced radio/TV technician for help.

Caution: Any changes or modifications to this device not explicitly approved by manufacturer could void your authority to operate this equipment.

This device complies with part 15 of the FCC Rules. Operation is subject to the following two conditions:

(1) This device may not cause harmful interference, and
(2) this device must accept any interference received, including interference that may cause undesired operation.

RF Exposure Information
This equipment complies with FCC radiation exposure limits set forth for an uncontrolled environment. This equipment should be installed and operated with minimum distance 20cm between the radiator and your body.

INDUSTRIAL NETWORK
SOLUTION SPECIALIST

GPSENKE

© GPSENKE(CHINA) | All rights reserved.
Update Time: 2024.6.1

This document and any part thereof may not be reproduced or used in any manner without the express written permission of GPSENKE (China).
Product specifications are subject to change without prior notice.
Please visit our website for the latest product information.