Headset function parameters		
Serial Number	Project	Product Properties
1	Sound System	Stereo
2	Technology	2.4GHz
3	Dimensions	20*7.6CM
4	Horn diameter	40mm
5	Noise reduction ratio	90db
6	Charging time	≤ 2 hours
7	Working hours	10H (light on)
8	Operating distance	⩽500
9	Frequency	2.4Ghz~2.4835Ghz
10	Lights	7 colored lights
11	Built-in battery	1000-500 mA
12	Built-In AUX	External link audio PC music playback

Precautions

1. From the date of signing for your purchase of this product, if it is installed and used in accordance with the instruction manual, if there is a non-human quality problem within one year, we will provide free maintenance. After one year, only the maintenance cost will be charged.
2. For quality problems caused by non-quality reasons of the company's products, such as improper use, improper storage, unauthorized disassembly and other reasons, the company will charge a maintenance fee for maintenance.
3. This product has a one-year warranty.

Company name: JilimiSYN (Shenzhen) Technology Co., LTD
Product Brand: JilimiSYN
Company Address: 201, Building 2, Hengtong Industrial City, 280 Jihua Road, Shuijing Community, Jihua Street, Longgang District, Shenzhen
Contact number: 400-9655-618

The company provides customers with a one-year effective warranty. If quality problems are found, customers can enjoy three guarantees of rights at the seller with the purchase voucher, three guarantees voucher or product production date label.

Except for the following:

1. More than three packages of validity
2. Man-made damage
3. Unpacking maintenance products without permission

检验
合格证

极力米

Instructions for use

Luminous Headset Series

Please read this manual carefully and keep it properly.
For future maintenance

1 Product Schematic Diagram

Transmitter

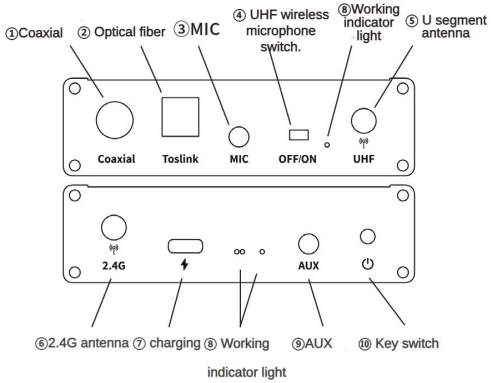

I. Key Description

① Coaxial input port

②Optical fiber input port

③MIC port (wireless microphone Input)

④ UHF wireless microphone switch

⑤ UHF wireless antenna

⑥2.4G antenna

⑦ USB charging port

⑧ Work indicator light: low-power red light, then automatically shut down, charge red light, full green light

⑨ AUX port (audio input port)

⑩ On/Off key: long press to start

II. Pairing Key Operation

1. Press and hold the transmitter button (⑩) to turn it on; the blue light on the transmitter will remain on
2. Toggle the receiver button (⑥) to turn it on; press and hold the receiver button (④) to pair, and you will hear a sound

Schematic Diagram of Products

Receiver

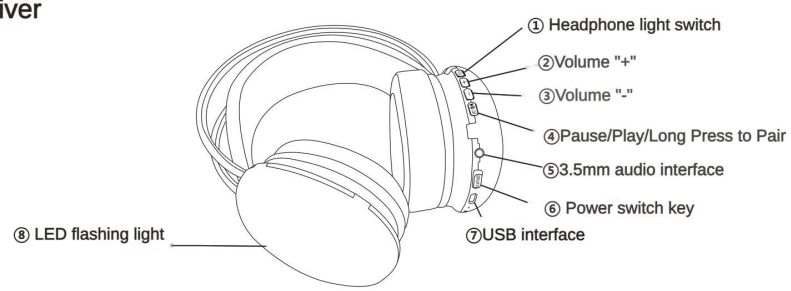

I. Key Operation

Power on/off: Toggle the switch (⑥) to turn it on or off.

Switch the headphone lights: Click the top button (①).

To turn off the lights: Press the volume button (②) and volume button (③) simultaneously. To adjust the headphone volume: Click volume button (②) to increase the volume; click volume button (③) to decrease the volume.

Pairing button: Press and hold (④) to pair with the transmitter.

Transmitter function parameters		
Serial Number	Project	Product Properties
1	Dimensions	95.3mm*26.5mm*97.7mm
2	Launch distance	200 m -500 m
3	Frequency	2.4Ghz~2.4835Ghz
4	Technology	2.4G
5	Interface	AUX,MIC, fiber, coaxial
6	UHF	Wireless Microphone
7	Built-in battery	8000 mA
8	Charging Duration	3h
9	Working hours	6h can be used while charging

FCC Warning

This device complies with part 15 of the FCC rules. Operation is subject to the following two conditions: (1) this device may not cause harmful interference, and (2) this device must accept any inte rference received, including interference that may cause undesired operation.

Changes or modifications not expressly approved by the party responsible for compliance could void the user's authority to operate the equipment.

NOTE: This equipment has been tested and found to comply with the limits for a Class B digital device, pursuant to part 15 of the FCC Rules. These limits are designed to provide reasonable protection against harmful interference in a residential installation. This equipment generates uses and can radiate radio frequency energy and, if not installed and used in accordance with the instructions, may cause harmful interference to radio communications. However, there is no guarantee that interference will not occur in a particular installation. If this equipment does cause harmful interferenceto radio or television reception, which can be determined by turning the equipment off and on, the user is encouraged to try to correct the interference by one or more of the following measures:

- Reorient or relocate the receiving antenna.
- Increase the separation between the equipment and receiver.
- Connect the equipment into an outlet on a circuit different from that to which the receiver is connected.
- Consult the dealer or an experienced radio/TV technician for help.

Radiation Exposure Statement

This equipment complies with FCC radiation exposure limits set forth for an uncontrolled environment. This equipment should be installed and operated with minimum distance 20cm between the radiator and your body.