Commercial Cleaning Robot **PRODUCT MANUAL** --P1-P15 English

全自動スピーディ床清掃・洗浄ロボット **取扱説明書** --P16-P30 日本語

全能速净智能清洁机器人 **日常维护操作说明书** --P31-P44 中文

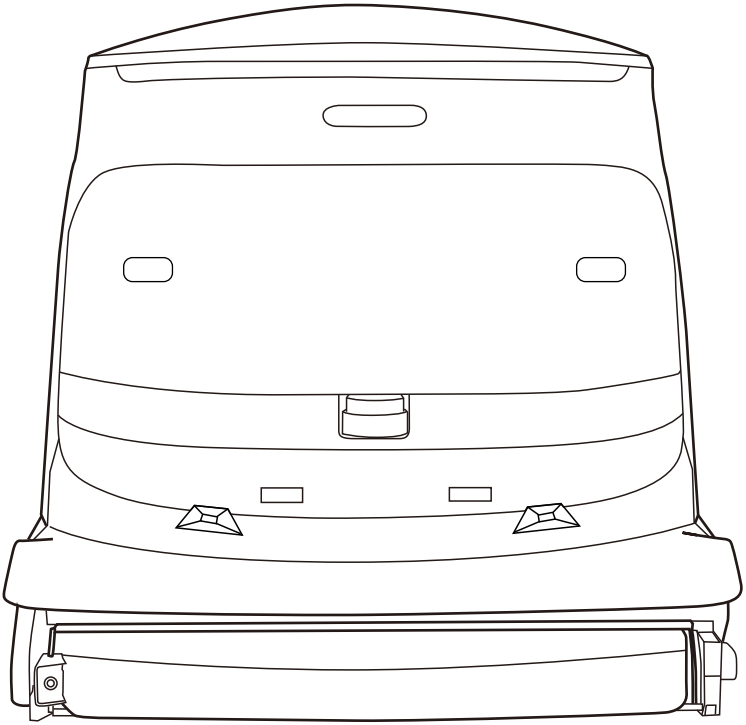

Read this manual before using the product. Keep this manual properly for future reference.

ご使用前に、この取扱説明書をよくお読みいただき、大切に保管してください。

本製品の使用方法と性能をご理解の前には、本製品を操作しないでください。

使用前请仔细阅读本使用说明书，并妥善保管。在了解本产品的使用和性能之前，请勿操作机器人。

Contents

English

Product Overview 1
- Names of parts 2
- Specifications 3
- Cleaning Modes 4

What's in the Box? 5
Maintenance 6
Safety Warnings 10
- About Safety Warnings 10
- Description of Symblos & Pictorial Indication 10
- Safety Instructions Before Use 11
- Handling the Robot 12
- Handling the Battery and the Charging Dock 14

Disposal 15

Introduction

This manual is designed to help owners and operators understand the basic instructions in order to operate and maintain the robot.

Improper use of this product may cause serious injury to yourself or others, or cause product damage and property loss. Once you use this product, it is deemed that you understand, approve and accept all the terms and content in this document.

If you encounter any problems during use, please contact our after-sales customer service for support. The pictures and illustrations in this manual are for reference only. If you have any questions, please feel free to contact us.

We hope that our product can bring you a better cleaning experience.

1 / Product Overview

1-1 Names of parts

Waste Water Tank ①
Touch Screen ②
Clean Water Inlet ③
Stereo Camera ④
Sweeper Brush ⑤
Ultrasonic Sensors ⑥
LiDAR Sensor ⑦
Charging Contacts ⑧
Line Lasers ⑨
Mop Pad ⑩
Debris Tray ⑪
Scrubber Brush ⑫

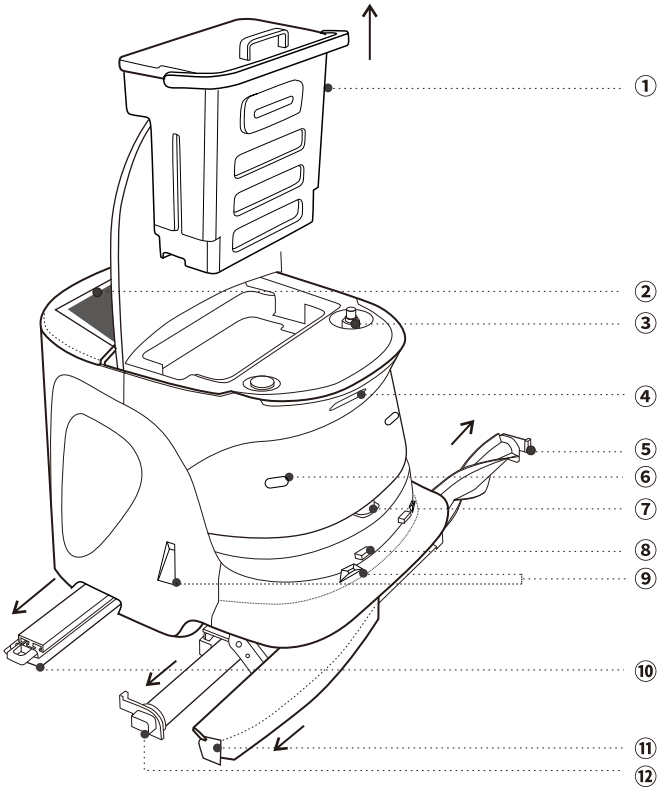

⑬ SIM & TF Card Slot
⑭ Maintenance Panel
⑮ Emergency Stop
⑯ Power Switch

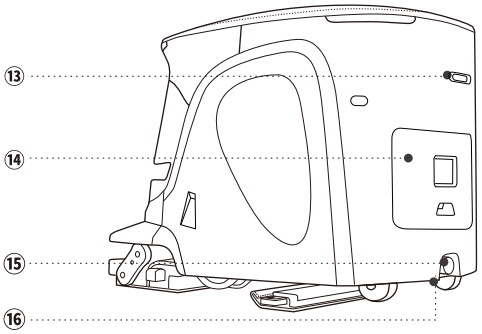

1-2 Specifications

MODEL		Commercial Cleaning Robot
DIMENSION		650mm*580mm*550mm (L*W*H)
WEIGHT		70kg
WORK MODE		Auto planning
Cleaning System	Cleaning Mode	Scrub, Dust Mop, Sweep & Mop, Sweep & Vacuum,[1] Sweep, Vacuum & Mop[1]
	Cleaning Speed	Scrub:1200m²/h Dust Mop:1800m²/h
	Vacuum Suction Force	15Kpa
	Cleaning Width	Scrub:520mm Dust Mop:580mm
	Edge Cleaning Capability[2]	10cm
	Clean Water Tank	22L
	Waste Water Tank	15L
Appearance	Material	PC+ABS
	Color	Black & Silver, Orange & Silver
	IP Code	IP43
Screen Specs	Screen Size	10.1inch
	Resolution	1920*1200
Wireless Communication	WiFi	802.11b/g/n/ac
Movement System	Gradeability	8°
	Min. Passable Width[2]	800mm
	Average Speed	0.8m/s
	Max. Cleaning Speed	1.2m/s
	Applicable Floor Type	Ceramic tile, Marble, Hardwood, PVC, Mixed Floor, Rubber, Low Pile Carpet(≤5.5mm)
HEPA Filter	HEPA	H13(99.97%)
Electrical System	Battery	Rated voltage 25.6V
		Runtime: Scrub 4h, Dust Mop 8h
	Charger	Metal contacts, auto recharging
		110-240V AC
	Charging Time	2-3 hours
	Noise Level	Scrub:60dB Dust Mop:45dB
LiDARs	Distance	0.02m ~ 30m
Path Planing	Cleaning Path	Zigzag / Spiral
	Working Mode	Auto navigation
	Obstacle Avoidance	Detection range: 0.02m-30m
Working Condition		Temperature 0~40°C, Humidity 5%~85% RH

[1] This feature will be implemented in a future OTA update. [2] Subject to different cleaning modes.

1-3 Cleaning Modes

1. Standard & Strong Mode

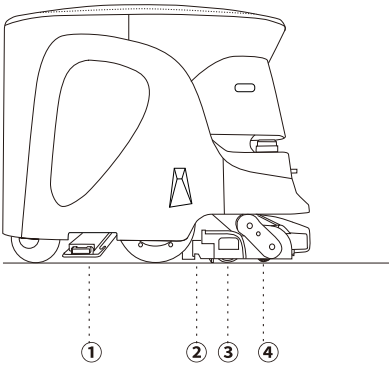

①Mop Pad ②Vacuum ③Microfiber Roller Brush
④Nylon Roller Brush

2. Dust Mop

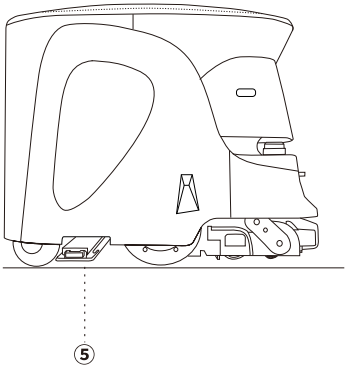

⑤Mop Pad

3. Standard & Quiet Mode

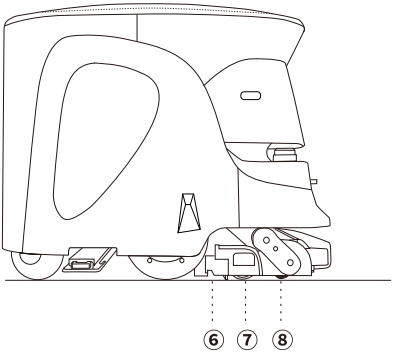

⑥Vacuum ⑦Microfiber Roller Brush
⑧Nylon Roller Brush

4. Vacuum & Mop

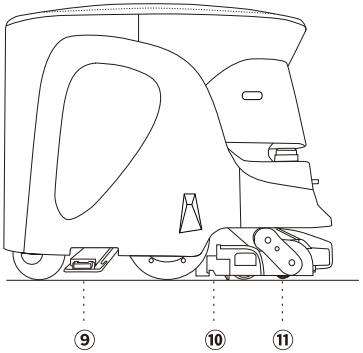

⑨Mop Pad ⑩Vacuum ⑪Nylon Roller Brush

2/ What's in the Box?

Commercial Cleaning Robot*1	Charging Dock*1	Debris Tray*1
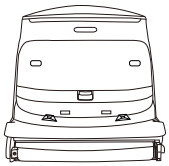	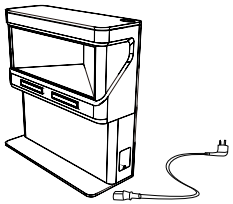	
Nylon Roller Brush * 1	**Microfiber Roller Brush*1**	**Mop Pad *5**
HEPA Filter * 2	**Cleaning Brush *2**	**Water Hose*1**
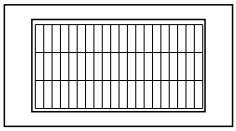	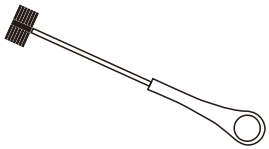	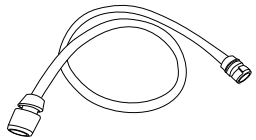
Star Hex Key*1	**Torx Screw *5**	**Hex Key*1**
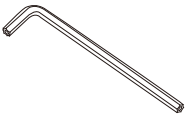		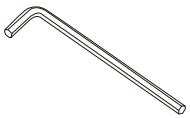

The accessories included in the package may vary depending on the region and order. Below illustrations are for reference only.

3/ Maintenance

Please make sure to lower the cleaning module before performing maintenance operations.

1.Mop Pad

Replace the mop pad based on usage. On average, the mop pad needs replacing after every dusting task of 500 square meters of space.

1

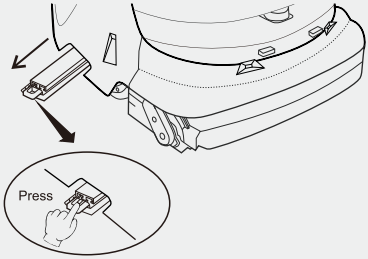

Pull out the mop pad.

2

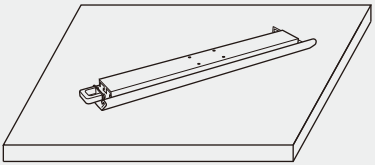

Take the mop pad to the tool room or washroom.

Note: To avoid dust falling onto the floor, please replace the mop pad in the toolroom or washroom.

3

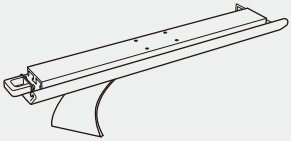

Tear off the used mop pad and replace it with a clean one.

2.Debris Tray

Debris tray should be cleaned when it's full. Check the Debris tray on a regular basis.

1

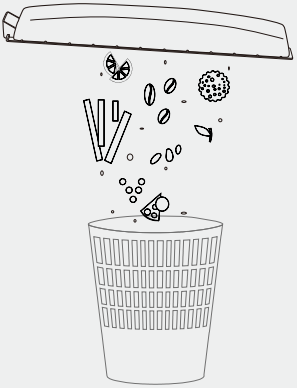

Shake the debris tray to clear out garbage inside.

2

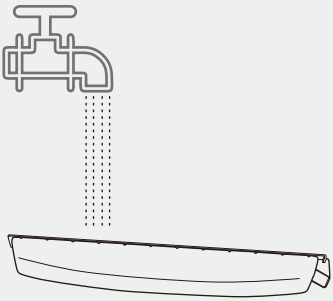

After rinsing the debris tray, please make sure to air dry it before reinstall.

Please follow the instructions below to install the debris tray.

NOTE: When encountering any clockages during installation, DO NOT push the tray by force, which may lead to permanent damage.

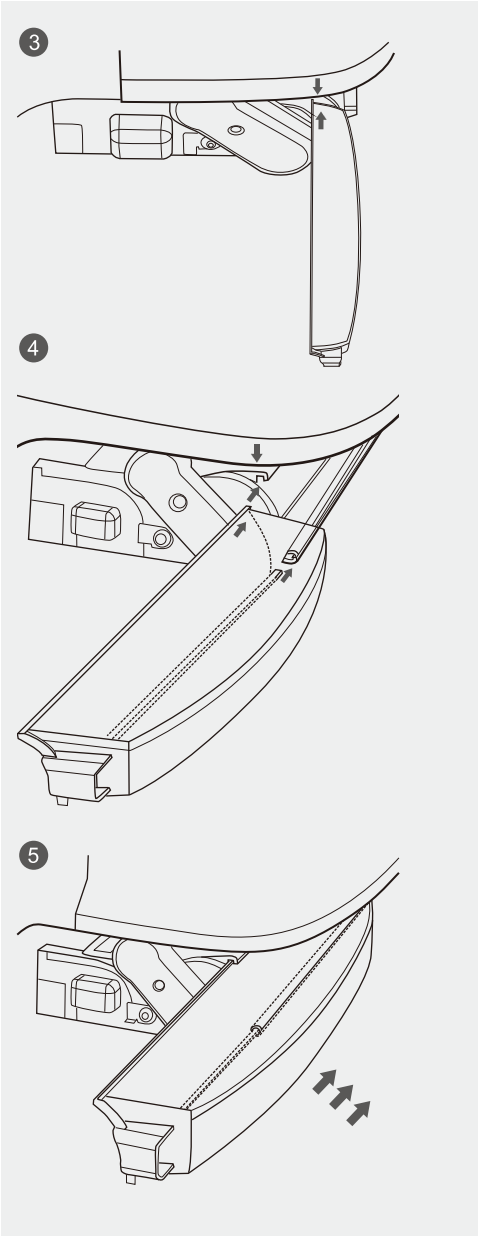

3.Nylon Roller Brush

Nylon roller brush should be cleaned and maintained on a regular basis.

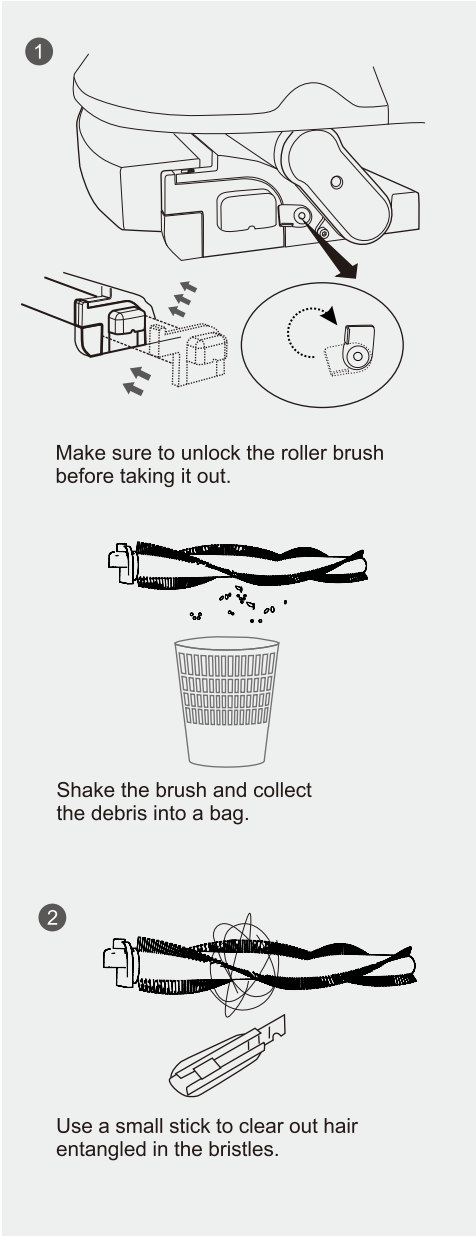

4.Microfiber Roller Brush

Microfiber roller brush constantly self cleans when it's working. It does not need frequent maintenance.

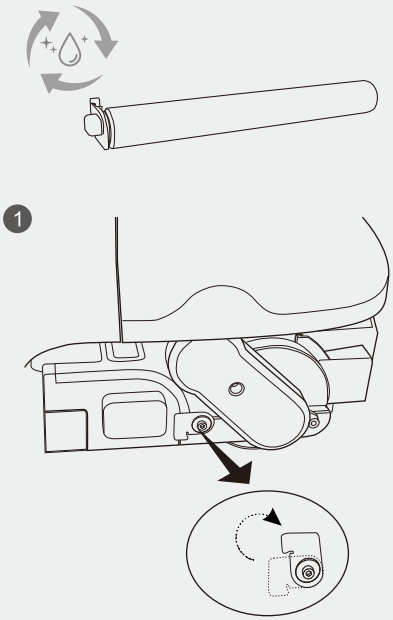

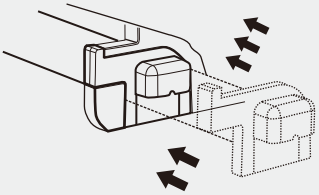

When installing roller brush, make sure the brush is fully pushed to the end.

5.Waste water tank

The waste water tank should be cleaned after every 2-3 hours of continuous cleaning on scrubbing mode.

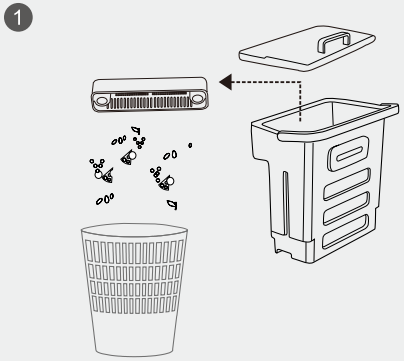

Take out the waste water tank and bring it to the toolroom or washroom.

Collect the filtered garbage into a bag or a trash can.

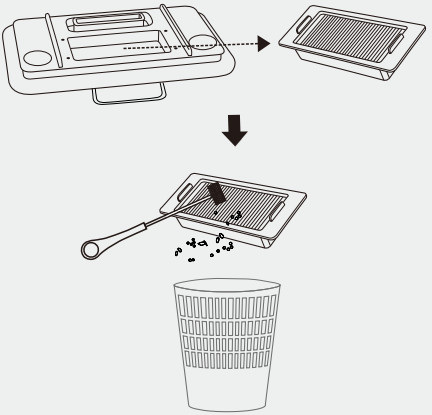

Use a brush to remove the dust from the HEPA.

2

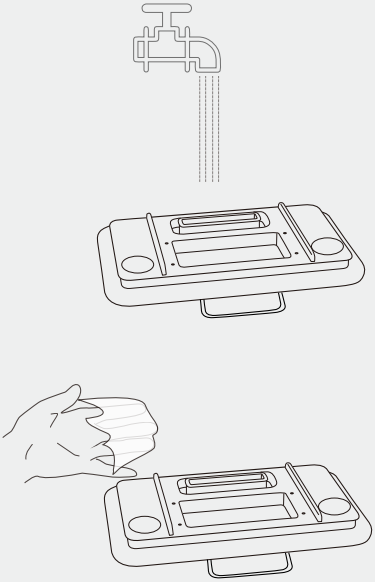

The lid can be rinsed with water, but must be dried before putting it back on the tank.

3

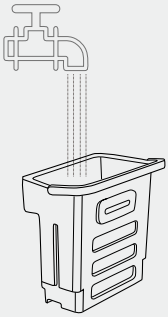

Pour out the waste water and rinse the tank with clean water.

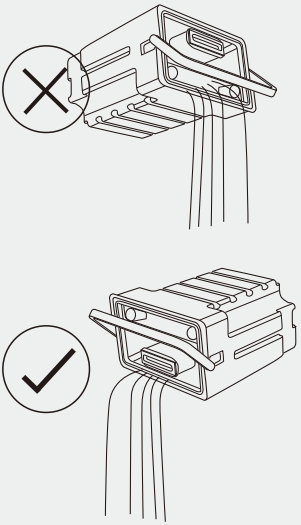

Please follow the above instructions for handling of the water tank. Pouring water from the opposite side may result in spillages from the vents.

4/ Safety Warnings

4-1 About Safety Warnings

IMPORTANT SAFETY INFORMATION: READ AND UNDERSTAND THESE SAFETY WARNINGS AND ALL INSTRUCTIONS PRIOR TO UNPACKING AND USING THE MACHINE.

Warnings presented here are intended to warn the user of potential harm to the user and other people as well as damage to property. Always adhere to them to reduce the potential for harm. This manual also provides safety warnings, correct handling procedures, and other regulatory information for using the machine, battery, and battery charger. The warnings provided in this manual do not cover all possible situations that may arise. The safety of pedestrians and people in the surroundings will be the first priority in any circumstances (such as when the machine does not operate properly, when the machine has tripped over, etc.).

Always adhere to warnings regarding machine installation, maintenance, and use and store this manual where it can always be referred to operators are advised to take normal health and safety precautions suitable for their environment.

In the following emergencies, immediately press the emergency stop button and turn off the main power switch.

- The machine is in a hazardous state (example: emitting smoke, is inoperable, has fallen over, etc.)
- The machine comes close to inflicting harm on surrounding people or things.
- The machine is operating (behaving) unpredictably or is operating in a manner that is inconsistent with this manual.

4-2 Description of Symblos & Pictorial Indication

The following symbol categories explain the level of harm or damage that can occur if warnings are not observed and the machine or related equipment is used incorrectly. Please be sure you understand these symbols and their correlating meanings before reading the remainder of this manual.

4-3 Safety Instructions Before Use

The product is a commercial cleaning robot intended for indoor environments. Please read and follow the instructions below carefully.

⚠ Warning

- Do not use the robot immediately after extreme temperature changes (e.g., moving from a cold outdoor environment to a warm indoor environment).
- Do not use the robot in an environment where there are excessive dust, moisture, rain, dirt, or near magnetic fields.
- Do not use the robot during thunderstorms or on days with lightning.
- Do not use the robot in environments that are flammable, explosive, or near heat sources.

⚠ Caution

- Avoid exposing the robot to direct sunlight for a long period of time.
- Avoid using the robot in places surrounded by glass doors, glass walls, and glass floors.
- Avoid using the robot in very narrow spaces (the robot is capable of autonomously avoiding tables and chairs with a height of 0.6~0.8m).
- Avoid using the robot in places with low-hanging objects or decorations (the objects or decorations should be higher than the robot height >500mm).
- Avoid using the robot in places where there are loose cables and hoses.
- Avoid using the robot in places with stairs, steps, or anywhere with a height difference >5cm.
- Avoid using the robot during busy hours.
- Avoid running the robot in excessively narrow passages.
- Do not start the robot when it is too close to obstacles. Make sure to keep an open space within a radius of 2m for robot movement.
- This cleaning robot is suitable for cleaning the following floor types: epoxy flooring, ceramic tiles, marble, and hardwood.
- This cleaning robot is not suitable for cleaning the following types of debris: tiny particles and fine dust; debris higher than 2cm; soft hoses or loose wires. Forcibly cleaning these types of debris may damage the robot.

Note

- Use and store the robot within the temperature range of 5°C~40°C and the humidity range of 5 ~85%RH.

- Use the robot on smooth and flat surfaces. It is not recommended to use the robot on carpets, soft or uneven surfaces, or outdoors, as it may reduce the robot's life and cause damage to the robot.
- Please be aware of areas with stairs or steps, and refrain from using the robot in these areas to prevent it from falling or dropping.
- If the robot is being used in an environment with glass surroundings, it is important to place visible and recognizable safety signs on the ground, positioned 22cm-25cm away from the glass.

4-4 Handling the Robot

⚠ Warning

- Do not allow liquid or quasi-liquid substances or any foreign objects to touch the charging terminals or external connection terminals of the robot.
- Be careful that dust does not adhere to the LIDAR sensor, camera, or other sensors. Do not cover the robot’s sensors.
- When using autonomous cleaning mode, make sure that the operator is able to respond immediately to an alert received from a special app.
- Use the robot with its wheels always in contact with the floor. When using the robot in manual cleaning mode, avoid abrupt operation except where unavoidable.
- In areas where the robot is inoperable or unmovable due to power not turning on, move the robot to a safer location.
- Do not perform any operation not given in this manual.
- Do not use the robot with the grounding chain not in contact with the floor. If the grounding chain breaks or comes off, contact customer support.
- Recharge the battery for the robot using only the battery charger that came with the robot.
- Do not place anything decorative that may hinder the robot’s operation or the emergency stop button.
- When replacing the roller brush, mop pad, or emptying the debris tray, please lower the cleaning module before proceeding with the operation.
- Before starting the cleaning task, ensure that the HEPA filter is correctly installed to prevent dust contamination and damage to the internal components.
- Do not clean the robot with a high-pressure cleaner.
- The robot is designed to clean indoor carpets and dry floors. Do not use it for any other purpose.
- Do not use the robot to collect hazardous or explosive waste.
- Do not block the robot’s vents.
- When lifting the robot from the floor, always use two people as a safety precaution.

- When the robot is operating, do not let infants, children, and pets come near the robot, or move foot or hand close to the bottom of the robot. Manage so that infants, children, or pets do not touch the robot.
- Do not tilt or transport the robot when there is water in the water tank.
- Do not apply excessive pressure on the screen or any surface of the robot to avoid causing damage.
- Do not drop, fall, compress, bend, poke, cut, microwave, burn, or paint the robot.
- Do not move the robot on a slope to prevent it from tripping and causing harm or damage.

⚠ Caution

- This robot is for indoor use only.
- This robot shall be stored indoors only.
- For lifting and long-distance transport, the machine must be shut down. Moving or lifting the machine in an emergency stop state may cause it to lose its position. Before restarting the task, use Reposition feature to re-establish the position.
- Do not attempt to disassemble the robot. Only authorized professionals are permitted to perform disassembly.
- If the cleaning module becomes clogged or entangled with garbage, make sure to perform the cleaning operation under the guidance of a professional. Do not forcefully pull or tug on the cleaning module to avoid any damage.
- To ensure the reliability and safety of the product, please use only authorized accessories.
- This appliance is not intended for use by persons (including children) with reduced physical, sensory or mental capabilities, or lack of experience and knowledge.
- If the robot has fallen over, press the emergency stop button and then turn off the main power switch on the robot.
- Do not insert any objects in the robot.
- When using a hose to fill up the clean water tank, please note that the water pressure requirement is 0.05MPa (min.) and 0.8MPa (max.).
- Use room temperature water not higher than 60°C for cleaning.
- If the robot is not operating normally (unusual sound, odor, smoke, etc.), immediately press the emergency stop button, to stop robot operation, turn off the main power switch, and contact customer support.

Federal Communications Commission (FCC) Statement
This device complies with part 15 of the FCC Rules. Operation is subject to the following two
conditions: (1) This device may not cause harmful interference, and (2) this device must accept any interference received, including interference that may cause undesired operation.
Note: This equipment has been tested and found to comply with the limits for a Class B digital device, pursuant to part 15 of the FCC Rules. These limits are designed to provide reasonable protection against harmful interference in a residential installation. This equipment generates, uses and can radiate radio frequency energy and, if not installed and used in accordance with the instructions, may cause harmful interference to radio communications. However, there is no guarantee that interference will not occur in a particular installation. If this equipment does cause harmful interference to radio or television reception, which can be determined by turning the equipment off and on, the user is encouraged to try to correct the interference by one or more of the following measures:
●Reorient or relocate the receiving antenna.
●Increase the separation between the equipment and receiver.
●Connect the equipment into an outlet on a circuit different from that to which the receiver is connected.
●Consult the dealer or an experienced radio/TV technician for help.
Warning: Changes or modifications made to this device not expressly approved by
IKITBOT (SHENZHEN) TECHNOLOGY CO,LIMITED.
may void the FCC authorization to operate this device.
Note: The manufacturer is not responsible for any radio or TV interference caused by unauthorized modifications to this equipment. Such modifications could void the user’s authority to operate the equipment.

RF exposure statement:
The transmitter must not be colocated or operated in conjunction with any other antenna or
transmitter. This equipment complies with the FCC RF radiation exposure limits set forth for
an uncontrolled environment. This equipment should be installed and operated with a Minimum distance of 20cm between the radiator and any part of your body.