FCC SAR Test Report

Applicant:	YEAHER INC.
EUT Description:	Portable Computer
Model Tested:	N158B
Model Covered:	N158L, N158R, N158S, N158G, N158E
FCC ID:	2BEMH-N158B
Standards:	FCC 47CFR §2.1093
Date of Receipt:	2025/08/13
Date of Test:	2025/10/31 to 2025/11/07
Date of Issue:	2025/11/13

TOWE. tested the above equipment in accordance with the requirements set forth in the above standards. The test results show that the equipment tested is capable of demonstrating compliance with the requirements as documented in this report.

the results documented in this report apply only to the tested sample, under the conditions and modes of operation as described herein. It is the manufacturer's responsibility to assure that additional production units of the model are manufactured with identical electrical and mechanical components. All sample tested were in good operating condition throughout the entire test program. Measurement Uncertainties are published for informational purposes only and were not taken into account unless noted otherwise. without written approval of TOWE, the test report shall not be reproduced except in full.

Jim Huang
Approved By:

Jack Li
Reviewed By:

All rights reserved. Unless otherwise specified, no part of this report may be reproduced or utilized in any part, form or by any means, electronic or mechanical, including photocopying and microfilm, without permission in writing from TOWE.

Revision History

Rev.	Issue Date	Description	Revised by
01	2025/11/13	Original	Jack Li

All rights reserved. Unless otherwise specified, no part of this report may be reproduced or utilized in any part, form or by any means, electronic or mechanical, including photocopying and microfilm, without permission in writing from TOWE.

Table of Contents

1 Summary of Test Results 5
2 Guidance Applied 6
3 Lab Information 6
3.1 Testing Location 6
3.2 Test Facility / Accreditations 6
3.3 Ambient Condition 6
4 Client Information 6
4.1 Applicant 6
4.2 Manufacturer 6
5 Product Information 7
5.1 Antenna Locations 8
6 RF Exposure Limits 9
7 Introduction 10
7.1 SAR Definition 10
8 SAR Measurements System 11
8.1 The SAR Measurement Set-up 11
8.2 E-Field Probe 12
8.3 Data Acquisition Electronics (DAE) 12
8.4 Phantom 13
8.5 Device Holder 14
8.6 Measurement procedure 15
8.6.1 Power reference measurement 15
8.6.2 Area scan 15
8.6.3 Zoom Scan 16
8.6.4 Power Drift Measurement 16
9 Test Equipment list 17
10 SAR measurement variability 18
11 Description of Test Position 19
11.1 Body exposure conditions 19
12 System Verification 20
12.1 Tissue Verification 20
12.2 SAR System Check 21
12.2.1 System Check Result 21
12.2.2 Detailed System Check Result 21
12.3 PD System Verification 22
13 SAR General Measurement Procedures 23
13.1 SAR Testing with 802.11 Transmitters 23
13.1.1 Initial Test Position Procedure 23
13.1.2 Initial Test Configuration Procedure 23
13.1.3 Subsequent Test Configuration Procedures 24
13.1.4 2.4 GHz SAR Procedures 24
13.1.5 5 GHz SAR Procedures 25
13.1.6 OFDM Transmission Mode and SAR Test Channel Selection 25
13.1.7 MIMO SAR Considerations 25
14 Conducted Power 26
15 SAR Data Summary 30
15.1 SAR Measurement Result of WIFI 2.4G 31
15.2 SAR Measurement Result of WIFI 5G 31
15.3 SAR Measurement Result of WIFI 6G 32
15.4 SAR Measurement Result of BT 32

All rights reserved. Unless otherwise specified, no part of this report may be reproduced or utilized in any part, form or by any means, electronic or mechanical, including photocopying and microfilm, without permission in writing from TOWE.

15.5 PD Measurement Result of WIFI 6G 33
16 Simultaneous Transmission Analysis 34
17 Measurement Uncertainty 36
18 Calibration Certificate 38
19 Test Setup Photos 38
Appendix A: System Check Plots 38
Appendix B: SAR Test Plots 38
Appendix C: Calibration certificate 38
Appendix D: Test Setup Photos 38

All rights reserved. Unless otherwise specified, no part of this report may be reproduced or utilized in any part, form or by any means, electronic or mechanical, including photocopying and microfilm, without permission in writing from TOWE.

1 Summary of Test Results

Band	Highest SAR(W/kg)
	Body 1g
WIFI 2.4G	0.28
WIFI 5G	0.93
WIFI 6G	0.58
BT	0.38
Highest Simultaneous Transmission SAR	1.30
SAR Limit	1.6

Band	Highest PD (W/m^2)
WIFI 6G	7.22
Limit	10.0

Highest Simultaneous Transmission with Multiple transmitters	Total Exposure Radio
SAR & Power Density	0.957
Radio Limit	1.0

All rights reserved. Unless otherwise specified, no part of this report may be reproduced or utilized in any part, form or by any means, electronic or mechanical, including photocopying and microfilm, without permission in writing from TOWE.

2 Guidance Applied

FCC 47CFR §2.1093
ANSI/IEEE C95.1-1992
IEEE 1528-2013
IEC/IEEE 62209-1528:2020
IEC TR 63170:2018
IEC/IEEE 63195-1:2022
IEC 62479:2010
FCC KDB 248227 D01
FCC KDB 447498 D01
FCC KDB 865664 D02
FCC KDB 616217 D04

3 Lab Information

3.1 Testing Location

These measurements tests were conducted at the Sushi TOWE Wireless Testing(Shenzhen) Co., Ltd. facility located at F401 and F101, Building E, Hongwei Industrial Zone, Liuxian 3rd Road, Bao'an District, Shenzhen, China. The measurement facility is compliant with the test site requirements specified in ANSI C63.4-2014
Tel.: +86-755-27212361
Contact Email: info@towewireless.com

3.2 Test Facility / Accreditations

A2LA (Certificate Number: 7088.01)
This laboratory is accredited in accordance with the recognized International Standard ISO/IEC 17025:2017 General requirements for the competence of testing and calibration laboratories. This accreditation demonstrates technical competence for a defined scope and the operation of a laboratory quality management system (refer to joint ISO-ILAC-IAF Communiqué dated April 2017).

FCC Designation No.: CN1353
Sushi TOWE Wireless Testing(Shenzhen) Co., Ltd. has been recognized as an accredited testing laboratory. Designation Number: CN1353.

ISED CAB identifier: CN0152
Sushi TOWE Wireless Testing(Shenzhen) Co., Ltd. has been recognized by ISED as an accredited testing laboratory.
CAB identifier: CN0152
Company Number: 31000

3.3 Ambient Condition

Temperature: 18°C~25°C
Relative Humidity: 30%~75%

4 Client Information

4.1 Applicant

Applicant:	YEAHER INC.
Address:	51 Steel Dr, Unit A, New Castle, DE 19720 United States

4.2 Manufacturer

Manufacturer:	Nimo Direct Inc.
Address:	51 Steel Dr, Unit A, New Castle, DE 19720 United States

All rights reserved. Unless otherwise specified, no part of this report may be reproduced or utilized in any part, form or by any means, electronic or mechanical, including photocopying and microfilm, without permission in writing from TOWE.

5 Product Information

EUT Description:	Portable Computer	
Model Tested:	N158B	
Model Covered:	N158L, N158R, N158S, N158G, N158E	
Hardware Version:	V30	
Software Version:	V51.06	
SN.	M01	
Device Capabilities:		
Band	Frequency Range (MHz)	Modulation Type
Wi-Fi 2.4G	2400~2483.5	802.11b/g/n(HT20/40)/VHT(20/40)/ax(HE20/40) RU(26/52/106/242/484)
Wi-Fi 5G	5150~5250	802.11a/n(HT20/40)VHT(20/40/80/160)/ax(20/40/80/160) RU(26/52/106/242/484/996*2)
	5250~5350	
	5470~5725	
	5725~5850	
Wi-Fi 6G	5925 ~ 6425 6425 ~ 6525 6525 ~ 6875 6875 ~ 7125	802.11a/ax(HE20/40/80/160) RU(26/52/106/242/484/996/1992)
Bluetooth	2400~2483.5	GFSK, π/4DQPSK, 8DPSK
Antenna Type	☐ External, ☒ Integrated	

Remark:
1, The above EUT's information was declared by applicant, please refer to the specifications or user's manual for more detailed description.
2, Only the Model No.(N158B) was tested in this report. According to the Declaration Letter about Identity of Products from client, the Model No.: N158B, N158L, N158R, N158S, N158G, N158E, just the model name is different, PCB board, circuit, structure and internal are the same.

All rights reserved. Unless otherwise specified, no part of this report may be reproduced or utilized in any part, form or by any means, electronic or mechanical, including photocopying and microfilm, without permission in writing from TOWE.

5.1 Antenna Locations

The detailed antenna location information can refer to Appendix D.

All rights reserved. Unless otherwise specified, no part of this report may be reproduced or utilized in any part, form or by any means, electronic or mechanical, including photocopying and microfilm, without permission in writing from TOWE.

6 RF Exposure Limits

Human Exposure	Uncontrolled Environment General Population (W/kg) or (mW/g)	Controlled Environment Occupational (W/kg) or (mW/g)
Spatial Peak SAR[1] (Brain/Trunk)	1.6	8.0
Spatial Average SAR[2] (Whole Body)	0.08	0.4
Spatial Peak SAR[3] (Hands/Feet/Ankle/Wrist)	4.0	20.0

Note:

1, The Spatial Peak value of the SAR averaged over any 1 gram of tissue (defined as a tissue volume in the shape of a cube) and over the appropriate averaging time.

2, The Spatial Average value of the SAR averaged over the whole body.

3, The Spatial Peak value of the SAR averaged over any 10 grams of tissue (defined as a tissue volume in the shape of a cube) and over the appropriate averaging time.

Uncontrolled Environments are defined as locations where there is the exposure of individuals who have no knowledge or control of their exposure. The general population/uncontrolled exposure limits are applicable to situations in which the general public may be exposed or in which persons who are exposed as a consequence of their employment may not be made fully aware of the potential for exposure or cannot exercise control over their exposure. Members of the general public would come under this category when exposure is not employment-related; for example, in the case of a wireless transmitter that exposes persons in its vicinity.

Controlled Environments are defined as locations where there is exposure that may be incurred by persons who are aware of the potential for exposure, (i.e. as a result of employment or occupation). In general, occupational/controlled exposure limits are applicable to situations in which persons are exposed as a consequence of their employment, who have been made fully aware of the potential for exposure and can exercise control over their exposure. The exposure category is also applicable when the exposure is of a transient nature due to incidental passage through a location where the exposure levels may be higher than the general population/uncontrolled limits, but the exposed person is fully aware of the potential for exposure and can exercise control over his or her exposure by leaving the area or by some other appropriate means.

RF Exposure Limit for above 6GHz

Per §1.1310 (d)(3), the MPE limits are applied for frequencies above 6 GHz. Power Density is expressed in units of W/m^2 or mW/cm^2.

Peak Spatially Averaged Power Density was evaluated over a circular area of 4cm^2 per interim FCC Guidance for near-field power density evaluations per October 2018 TCB Workshop notes.

Human Exposure to Radiofrequency (RF) Radiation Limits		
Frequency Range (MHz)	**Power Density (mW/cm^2)**	**Average Time (Minutes)**
(A)Limits for Occupational/Controlled Environments		
1,500-100,000	5.0	6
(B)Limits for General Population/Uncontrolled Environments		
1,500-100,000	1.0	30

Note: 1.0 mW/cm^2 is 10.0 W/m^2.

All rights reserved. Unless otherwise specified, no part of this report may be reproduced or utilized in any part, form or by any means, electronic or mechanical, including photocopying and microfilm, without permission in writing from TOWE.

7 Introduction

SAR is related to the rate at which energy is absorbed per unit mass in an object exposed to a radio field. The SAR distribution in a biological body is complicated and is usually carried out by experimental techniques or numerical modeling. The standard recommends limits for two tiers of groups, occupational/controlled and general population/uncontrolled, based on a person's awareness and ability to exercise control over his or her exposure. In general, occupational/controlled exposure limits are higher than the limits for general population/uncontrolled.

7.1 SAR Definition

The SAR definition is the time derivative (rate) of the incremental energy (dW) absorbed by (dissipated in) an incremental mass (dm) contained in a volume element (dv) of a given density (ρ). The equation description is as below:

$$\boldsymbol{SAR = \frac{d}{dt}\left(\frac{dW}{dm}\right) = \frac{d}{dt}\left(\frac{dW}{\rho dv}\right)}$$

SAR is expressed in units of Watts per kilogram (W/kg):

$$\mathbf{SAR} = \frac{\boldsymbol{\sigma E^2}}{\boldsymbol{\rho}}$$

Where:

σ is the conductivity of the tissue material (S/m)

ρ is the mass density of the tissue material (kg/m^3)

E is the RMS electrical field strength (V/m)

All rights reserved. Unless otherwise specified, no part of this report may be reproduced or utilized in any part, form or by any means, electronic or mechanical, including photocopying and microfilm, without permission in writing from TOWE.

8 SAR Measurements System

8.1 The SAR Measurement Set-up

The DASY system used for performing compliance tests consists of the following items:

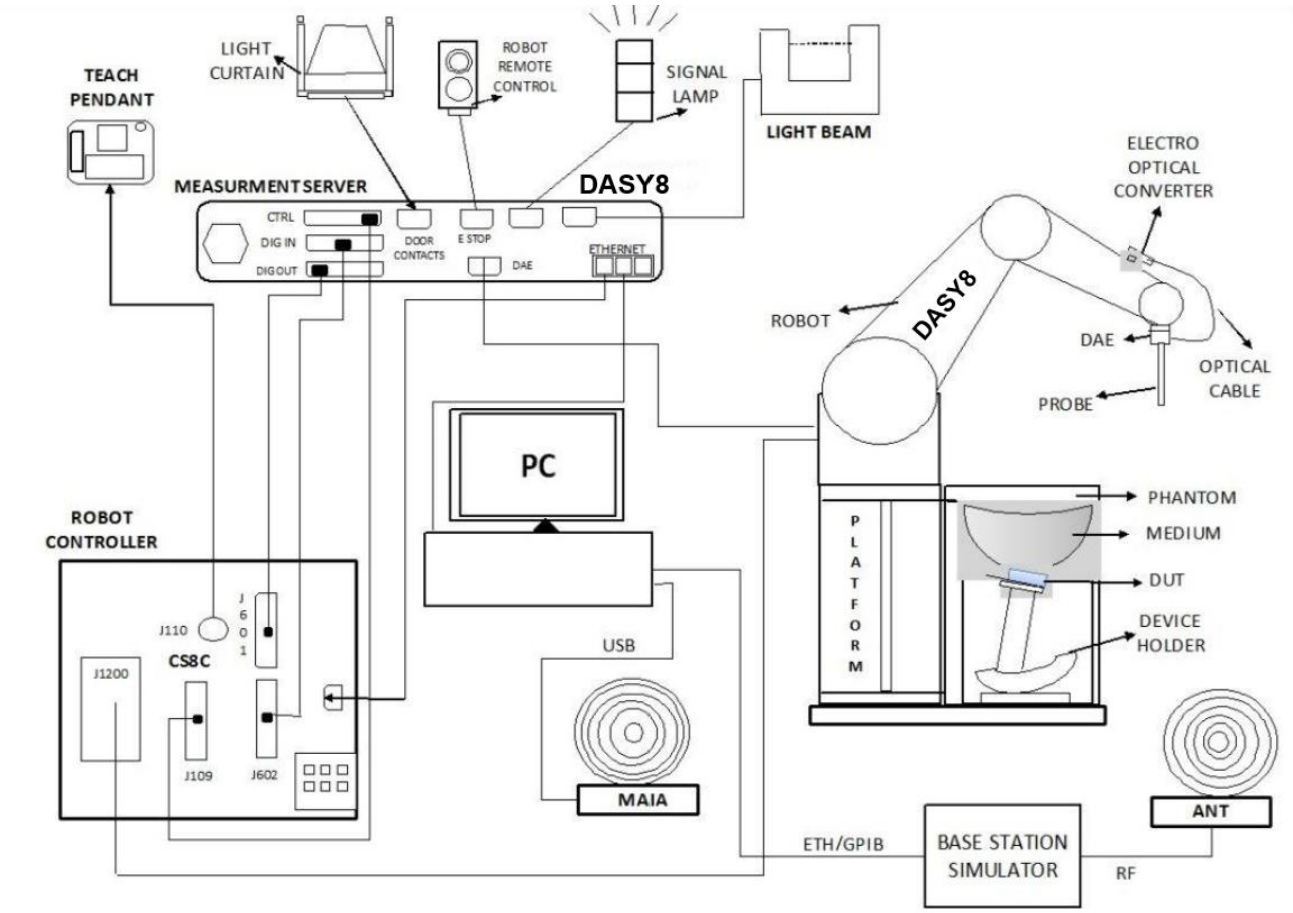

- A standard high precision 6-axis robot with controller, teach pendant and software. An arm extension for accommodating the data acquisition electronics (DAE).
- An isotropic Field probe optimized and calibrated for the targeted measurement.
- A data acquisition electronics (DAE) which performs the signal amplification, signal multiplexing, AD-conversion, offset measurements, mechanical surface detection, collision detection, etc. The unit is battery powered with standard or rechargeable batteries. The signal is optically transmitted to the EOC.
- The Electro-optical converter (EOC) performs the conversion from optical to electrical signals for the digital communication to the DAE. To use optical surface detection, a special version of the EOC is required. The EOC signal is transmitted to the measurement server.
- The function of the measurement server is to perform the time critical tasks such as signal filtering, control of the robot operation and fast movement interrupts.
- The Light Beam used is for probe alignment. This improves the (absolute) accuracy of the probe positioning.
- A computer running Windows 11 and the DASY8 software.
- Remote control and teach pendant as well as additional circuitry for robot safety such as warning lamps, etc.
- The phantom, the device holder and other accessories according to the targeted measurement.

All rights reserved. Unless otherwise specified, no part of this report may be reproduced or utilized in any part, form or by any means, electronic or mechanical, including photocopying and microfilm, without permission in writing from TOWE.

8.2 E-Field Probe

	Symmetrical design with triangular core Built-in shielding against static charges PEEK enclosure material (resistant to organic solvents, e.g., DGBE)
Calibration	ISO/IEC 17025 calibration service available.
Frequency	10 MHz to > 6 GHz Linearity: ± 0.2 dB (30 MHz to 6 GHz)
Directivity	± 0.3 dB in TSL (rotation around probe axis) ± 0.5 dB in TSL (rotation normal to probe axis)
Dynamic Range	10 µW/g to > 100 mW/g Linearity: ± 0.2 dB (noise: typically < 1 µW/g)
Dimensions	Overall length: 337 mm (Tip: 20 mm) Tip diameter: 2.5 mm (Body: 12 mm) Typical distance from probe tip to dipole centers: 1 mm

8.3 Data Acquisition Electronics (DAE)

	The data acquisition electronics (DAE) consists of a highly sensitive electrometer-grade preamplifier with auto-zeroing, a channel and gain switching multiplexer, a fast 16 bit AD-converter and a command decoder and control logic unit. Transmission to the measurement server is accomplished through an optical downlink for data and status information as well as an optical uplink for commands and the clock. The input impedance of the DAE is 200 MOhm; the inputs are symmetrical and floating. Common mode rejection is above 80 dB.

All rights reserved. Unless otherwise specified, no part of this report may be reproduced or utilized in any part, form or by any means, electronic or mechanical, including photocopying and microfilm, without permission in writing from TOWE.

8.4 Phantom

SAM Twin Phantom:

Material	Vinylester, glass fiber reinforced (VE-GF)	
Shell Thickness	2 ± 0.2 mm (6 ± 0.2 mm at ear point)	
Dimensions (incl. Wooden Support)	Length: 1000 mm Width: 500 mm Height: adjustable feet	
Filling Volume	Approx. 25 liters	
Wooden Support	SPEAG standard phantom table	

The bottom plate contains three pair of bolts for locking the device holder. The device holder positions are adjusted to the standard measurement positions in the three sections. A white cover is provided to tap the phantom during off-periods to prevent water evaporation and changes in the liquid parameters. On the phantom top, three reference markers are provided to identify the phantom position with respect to the robot.

ELI Phantom:

Material	Vinylester, glass fiber reinforced (VE-GF)	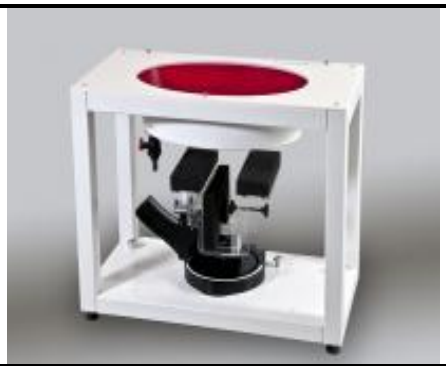
Shell Thickness	2.0 ± 0.2 mm (bottom plate)	
Dimensions	Major axis: 600 mm Minor axis: 400 mm	
Filling Volume	approx. 30 liters	
Wooden Support	SPEAG standard phantom table	

The ELI phantom is intended for compliance testing of handheld and body-mounted wireless devices in the frequency range of 30 MHz to 6 GHz. ELI4 is fully compatible with standard and all known tissue simulating liquids.

All rights reserved. Unless otherwise specified, no part of this report may be reproduced or utilized in any part, form or by any means, electronic or mechanical, including photocopying and microfilm, without permission in writing from TOWE.

8.5 Device Holder

The SAR measured in the phantom is approximately inversely proportional to the square of the distance between the source and the liquid surface. For a source at 5mm distance, a positioning uncertainty of ± 0.5mm would produce uncertainty in the SAR of ±20%. Accurate device positioning is therefore crucial for accurate and repeatable measurements. The positions at which the devices must be measured are defined by the standards. The DASY8 device holder along with the associated adaptors / options is designed to accommodate different types & sizes (laptops, tablets, phones) of test devices and yet provide accurate and repeatable positioning as described in the test standards.

The device holder is available in two configurations (see Figure 3.13.1): for hand held transmitters (mobile phones) – MD4HHTV5 – Mounting Device for Hand-Held Transmitters and for Body-Worn transmitters – MD4LAP5 – Mounting Device for laptops and other body worn transmitters.

(a) MD4HHTV5

(b) MD4LAPV5

Figure 3.13.1: Mounting Device for Hand-Held Devices and Laptop / Body-Worn Devices

All rights reserved. Unless otherwise specified, no part of this report may be reproduced or utilized in any part, form or by any means, electronic or mechanical, including photocopying and microfilm, without permission in writing from TOWE.

8.6 Measurement procedure

8.6.1 Power reference measurement

The Power Reference Measurement and Power Drift Measurement jobs are useful jobs for monitoring the power drift of the device under test in the batch process. The minimum distance of probe sensors to surface determines the closest measurement point to phantom surface. This distance cannot be smaller than the distance of sensor calibration points to probe tip as defined in the probe properties.

8.6.2 Area scan

Measurement procedures for evaluating SAR from wireless handsets typically start with a coarse measurement grid to determine the approximate location of the local peak SAR values. This is known as the area-scan procedure. In addition, identify the positions of any local maxima with SAR values within 2 dB of the maximum value, and that will not be within the zoom scan of other peaks. Additional zoom scans shall be measured for such peaks only when the primary peak is within 2 dB of the SAR compliance limit.

Area scan parameters SAR measurement as below:

Parameter	DUT transmit frequency being tested	
	$f \leq 3$ GHz	3 GHz < $f \leq 10$ GHz
Maximum distance between the measured points (geometric centre of the sensors) and the inner phantom surface (z_{M1} in Figure 20 in mm)	5 ± 1	$\delta \ln(2)/2 \pm 0{,}5$ [a]
Maximum spacing between adjacent measured points in mm (see O.8.3.1)[b]	20, or half of the corresponding zoom scan length, whichever is smaller	$60/f$, or half of the corresponding zoom scan length, whichever is smaller
Maximum angle between the probe axis and the phantom surface normal (α in Figure 20)[c]	5° (flat phantom only) 30° (other phantoms)	5° (flat phantom only) 20° (other phantoms)
Tolerance in the probe angle	1°	1°

[a] δ is the penetration depth for a plane-wave incident normally on a planar half-space.

[b] See Clause O.8 on how Δx and Δy may be selected for individual area scan requirements.

[c] The probe angle relative to the phantom surface normal is restricted due to the degradation in the measurement accuracy in fields with steep spatial gradients. The measurement accuracy decreases with increasing probe angle and increasing frequency. This is the reason for the tighter probe angle restriction at frequencies above 3 GHz.

All rights reserved. Unless otherwise specified, no part of this report may be reproduced or utilized in any part, form or by any means, electronic or mechanical, including photocopying and microfilm, without permission in writing from TOWE.

8.6.3 Zoom Scan

Zoom Scans are used to assess the peak spatial SAR values within a cubic averaging volume containing 1 g and 10 g of simulated tissue. The Zoom Scan measures points (refer to table below) within a cube whose base faces are centered on the maxima found in a preceding area scan job within the same procedure. When the measurement is done, the Zoom Scan evaluates the averaged SAR for 1 g and 10 g and displays these values next to the job's label.

Zoom Scan parameters SAR measurement as below:

Parameter	DUT transmit frequency being tested	
	$f \leq 3$ GHz	3 GHz $< f \leq 10$ GHz
Maximum distance between the closest measured points and the phantom surface (z_{M1} in Figure 20 and Table 3, in mm)	5	$\delta \ln(2)/2$ [a]
Maximum angle between the probe axis and the phantom surface normal (α in Figure 20)	5° (flat phantom only) 30° (other phantoms)	5° (flat phantom only) 20° (other phantoms)
Maximum spacing between measured points in the x- and y-directions (Δx and Δy, in mm)	8	$24/f$ [b]
For uniform grids: Maximum spacing between measured points in the direction normal to the phantom shell (Δz_1 in Figure 20, in mm)	5	$10/(f-1)$
For graded grids: Maximum spacing between the two closest measured points in the direction normal to the phantom shell (Δz_1 in Figure 20, in mm)	4	$12/f$
For graded grids: Maximum incremental increase in the spacing between measured points in the direction normal to the phantom shell ($R_z = \Delta z_2/\Delta z_1$ in Figure 20)	1,5	1,5
Minimum edge length of the zoom scan volume in the x- and y-directions (L_z in O.8.3.2, in mm)	30	22
Minimum edge length of the zoom scan volume in the direction normal to the phantom shell (L_h in O.8.3.2 in mm)	30	22
Tolerance in the probe angle	1°	1°

[a] δ is the penetration depth for a plane-wave incident normally on a planar half-space.

[b] This is the maximum spacing allowed, which might not work for all circumstances.

8.6.4 Power Drift Measurement

The Power Drift Measurement job measures the field at the same location as the most recent power reference measurement job within the same procedure, and with the same settings. The Power Drift Measurement gives the field difference in dB from the reading conducted within the last Power Reference Measurement. Several drift measurements are possible for one reference measurement. This allows a user to monitor the power drift of the device under test that must remain within a maximum variation of ±5%. Detail power drift measurement refer to appendix B.

All rights reserved. Unless otherwise specified, no part of this report may be reproduced or utilized in any part, form or by any means, electronic or mechanical, including photocopying and microfilm, without permission in writing from TOWE.

9 Test Equipment list

Manufacturer	Equipment Name	Model	Serial Number	Calibration Date	Due Date of calibration
SPEAG	ELI	ELI V8.0	2227	NCR	NCR
SPEAG	mmWave Phantom	mmWave	1121	NCR	NCR
SPEAG	EUmmWV Probe Tip Protection	EUmmWV4	9499	2024/12/06	2025/12/05
SPEAG	E-Field Probe	EX3DV4	7858	2025/01/15	2026/01/14
SPEAG	E-Field Probe	EX3DV4	7858	2025/02/20	2026/02/19
SPEAG	E-Field Probe	EX3DV4	7383	2025/03/14	2026/03/13
SPEAG	Data Acquisition Electronics	DAE4	1847	2024/12/31	2025/12/30
SPEAG	System Validation Kits	D2450V2	1099	2023/02/02	2026/02/01
SPEAG	System Validation Kits	D5GHzV2	1371	2023/02/03	2026/02/02
SPEAG	System Validation Kits	D6.5GHzV2	1096	2023/05/11	2026/05/10
SPEAG	5G Verification Source	10GHz	1075	2024/12/03	2025/12/02
SPEAG	Dielectric parameter probes	DAK3.5	1341	2025/07/14	2026/07/13
Agilent	Network Analyzer	E5071B	MY42302220	2025/03/11	2026/03/10
Talent Microwave	Directional Coupler	TC-05180-10S	220420003	NCR	NCR
R&S	Signal Generator	SMR20	100648	2025/03/11	2026/03/10
QiJi	Preamplifier	YX28982301	TOWE-EQ-SR-021	NCR	NCR
R&S	Power Sensor	NRP-Z21	101651	2025/03/11	2026/03/10
R&S	Power Sensor	NRP-Z21	104189	2025/03/11	2026/03/10
HiSiDiKe	Thermometer	TP300	TOWE-EQ-SR-023	2025/03/12	2026/03/11
BingYu	Temperature and Humidity Indicator	HTC-1	TOWE-EQ-SR-025	2025/06/04	2026/06/03

Note:

1. Referring to KDB 865664 D01v01r04, the dipole calibration interval can be extended to 3 years with justification. The dipoles are also not physically damaged or repaired during the interval.

2. The justification data of dipole can be found in Appendix C. The return loss is < -20dB, within 20% of prior calibration, the impedance is within 5 ohm of prior calibration.

All rights reserved. Unless otherwise specified, no part of this report may be reproduced or utilized in any part, form or by any means, electronic or mechanical, including photocopying and microfilm, without permission in writing from TOWE.

10 SAR measurement variability

SAR measurement variability must be assessed for each frequency band, which is determined by the SAR probe calibration point and tissue-equivalent medium used for the device measurements. When both head and body tissue-equivalent media are required for SAR measurements in a frequency band, the variability measurement procedures should be applied to the tissue medium with the highest measured SAR, using the highest measured SAR configuration for that tissue equivalent medium.

The following procedures are applied to determine if repeated measurements are required.

1) Repeated measurement is not required when the original highest measured SAR is < 0.80 or 2 W/kg (1-g or 10-g respectively); steps2) through 4) do not apply.

2) When the original highest measured SAR is ≥ 0.80 or 2 W/kg (1-g or 10-g respectively), repeat that measurement once.

3) Perform a second repeated measurement only if the ratio of largest to smallest SAR for the original and first repeated measurements is > 1.20 or when the original or repeated measurement is ≥ 1.45 or 3.6W/kg (~ 10% from the 1-g or 10-g respective SAR limit).

4) Perform a third repeated measurement only if the original, first or second repeated measurement is ≥1.5 or 3.75 W/kg (1-g or 10-g respectively) and the ratio of largest to smallest SAR for the original, first and second repeated measurements is > 1.20

All rights reserved. Unless otherwise specified, no part of this report may be reproduced or utilized in any part, form or by any means, electronic or mechanical, including photocopying and microfilm, without permission in writing from TOWE.

11 Description of Test Position

11.1 Body exposure conditions

According to KDB 616217 D04, SAR measurement is required for the bottom surface of the keyboard of the laptop PC and positioned against the flat phantom. The required minimum test separation distance for incorporating transmitters and antennas into laptop computer display is determined with the display screen opened at an angle of 90° to the keyboard compartment.

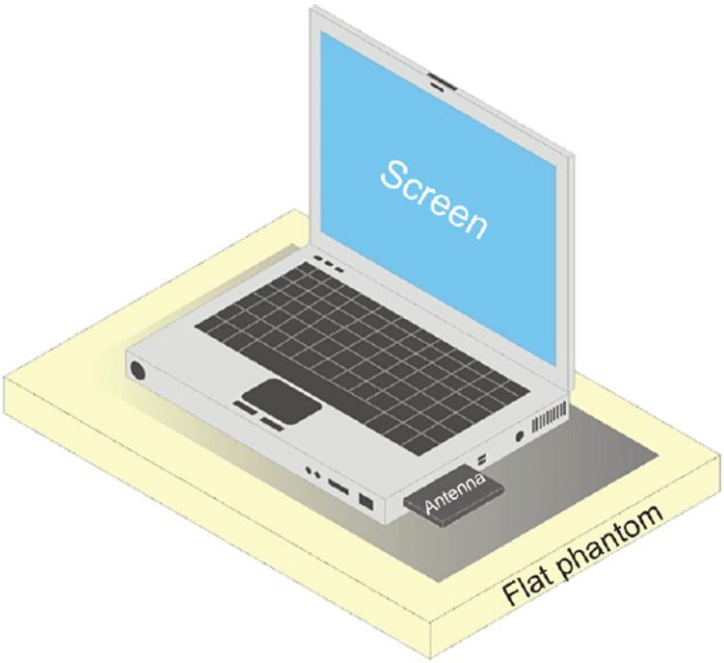

All rights reserved. Unless otherwise specified, no part of this report may be reproduced or utilized in any part, form or by any means, electronic or mechanical, including photocopying and microfilm, without permission in writing from TOWE.

12 System Verification

12.1 Tissue Verification

The Conductivity (σ) and Permittivity (ρ) are listed in bellow table. The temperature variation of the Tissue Simulate Liquids was 22±2°C, the liquid depth of the ear reference point or the flat phantom was at least 15 cm (which is shown in Figure 12-1).

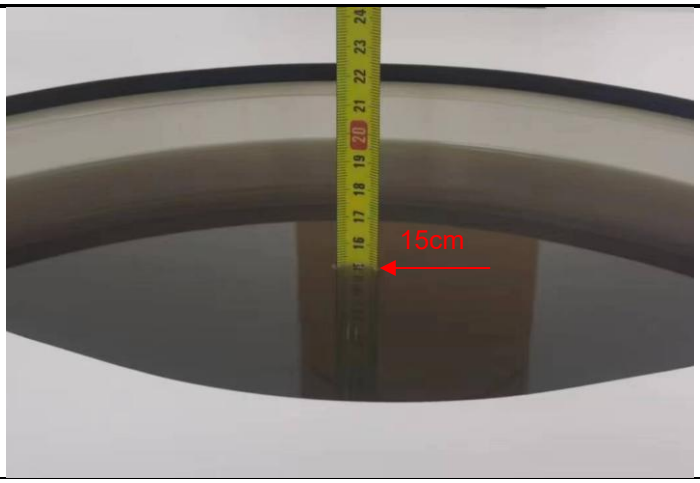

Figure 12-1 Liquid depth in the Flat Phantom

Frequency (MHz)	Tissue Type	Liquid Temp. (℃)	Target Tissue		Measured Tissue		Deviation (Limit ±5%)		Date
			Permittivity ε_r	Conductivity σ(S/m)	Permittivity ε_r	Conductivity σ(S/m)	$\Delta\varepsilon_r$	Δσ	
2450	Head	21.8	39.20	1.80	39.200	1.830	0.00%	1.67%	2025/11/01
5300	Head	22.1	35.90	4.76	36.500	4.770	1.67%	0.21%	2025/11/07
5600	Head	22.1	35.50	5.07	35.500	5.120	0.00%	0.99%	2025/11/07
5800	Head	22.1	35.30	5.27	35.400	5.390	0.28%	2.28%	2025/11/07
6500	Head	22.2	34.50	6.07	34.600	6.030	0.29%	-0.66%	2025/10/31

Table 1： Measurement Tissue Parameters

All rights reserved. Unless otherwise specified, no part of this report may be reproduced or utilized in any part, form or by any means, electronic or mechanical, including photocopying and microfilm, without permission in writing from TOWE.

12.2 SAR System Check

Prior to SAR assessment, a SAR system Check measurement was performed to see if the measured SAR was within ±10% from the target SAR values. The System Performance Check Setup in Figure 12-3.

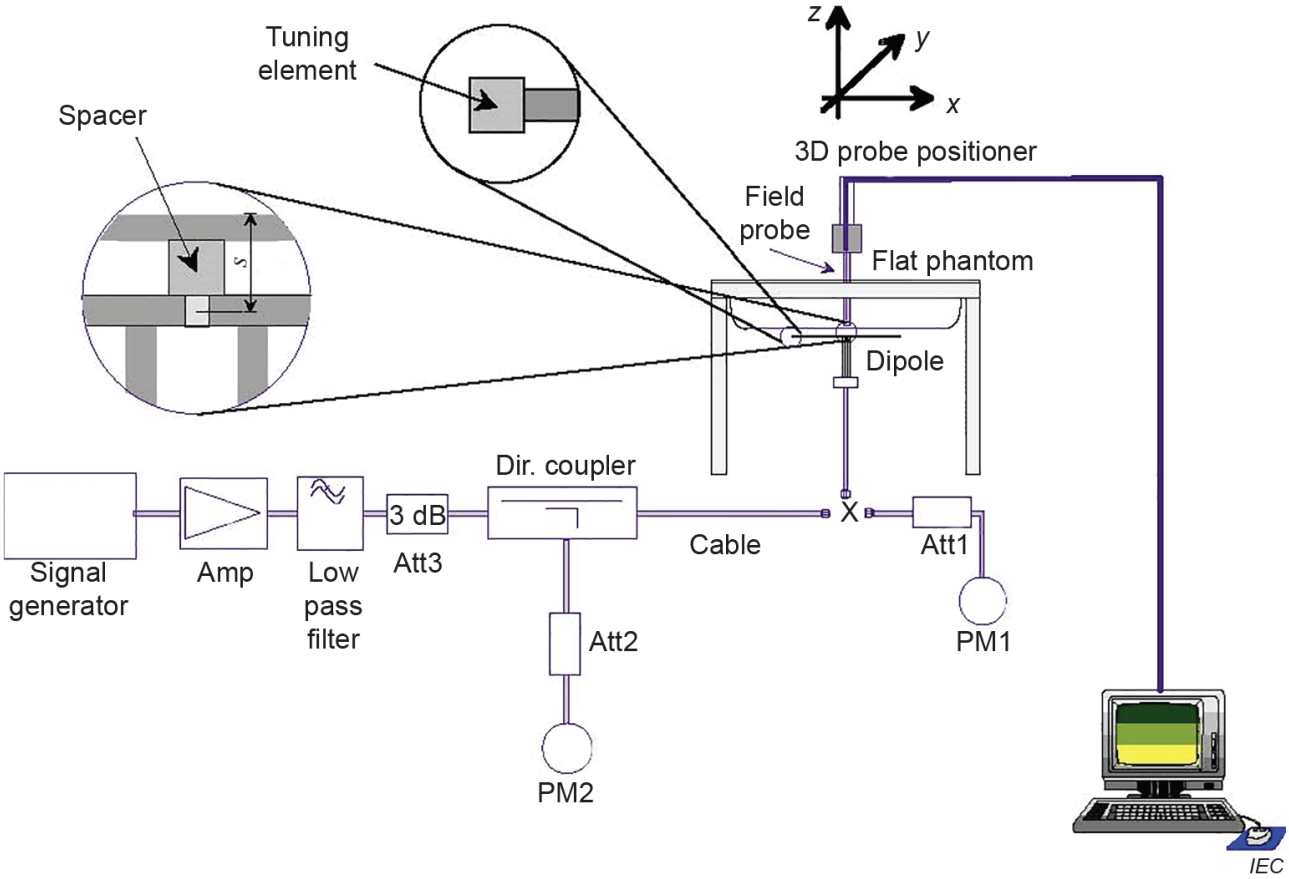

Figure 12-3 System Performance Check Setup

12.2.1 System Check Result

Frequency (MHz)	Tissue Type	Dipole	S/N	Target SAR (1W)		Measured SAR (100mW)		Measured SAR (normalized to 1W)		Deviation (Limit ±10%)		Date
				1g (W/kg)	10g (W/kg)	1g (W/kg)	10g (W/kg)	1g (W/kg)	10g (W/kg)	Δ1g	Δ10g	
2450	Head	D2450V2	1099	51.40	23.90	5.35	2.53	53.50	25.30	4.09%	5.86%	2025/11/01
5300	Head	D5GHzV2	1371	80.90	23.10	7.77	2.28	77.70	22.80	-3.96%	-1.30%	2025/11/07
5600	Head	D5GHzV2	1371	82.30	23.30	8.63	2.51	86.30	25.10	4.86%	7.73%	2025/11/07
5800	Head	D5GHzV2	1371	79.80	22.40	8.22	2.37	82.20	23.70	3.01%	5.80%	2025/11/07
6500	Head	D6.5GHzV2	1096	289.00	53.40	30.30	5.68	303.00	56.80	4.84%	6.37%	2025/10/31

Table 2： SAR System Check Result

12.2.2 Detailed System Check Result

Please see Appendix A

All rights reserved. Unless otherwise specified, no part of this report may be reproduced or utilized in any part, form or by any means, electronic or mechanical, including photocopying and microfilm, without permission in writing from TOWE.

12.3 PD System Verification

The system was verified to be within ±0.66 dB of the power density targets on the calibration certificate according to the test system specification in the user's manual and calibration facility recommendation. The 0.66 dB deviation threshold represents the expanded uncertainty for system performance checks using SPEAG mmWave verification sources. The same spatial resolution and measurement region used in the source calibration was applied during the system check.

The measured power density distribution of verification source was also confirmed through visual inspection to have no noticeable differences, both spatially (shape) and numerically (level) from the distribution provided by the manufacturer, per November 2017 TCBC Workshop Notes.

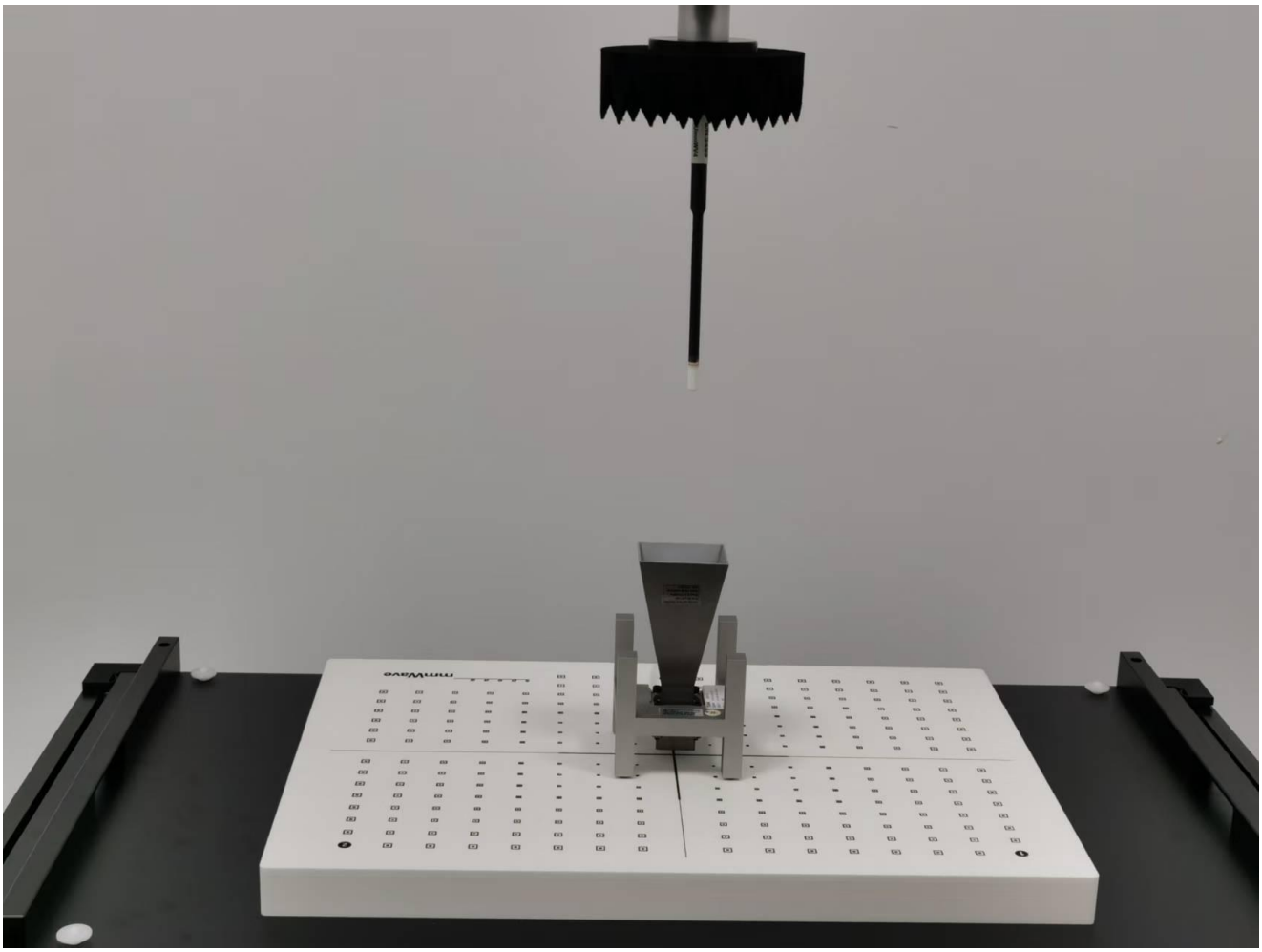

System Verification Setup Photo

Frequency (GHz)	PD Verification Source	Distance (mm)	Measured 4cm^2 (W/m^2)	Target 4cm^2 (W/m^2)	Deviation (dB)	Measured Date
10G	10GHz_1075	10	61.00	56.70	0.32	2025/11/06

Detailed System Check Results Please see Appendix A.

All rights reserved. Unless otherwise specified, no part of this report may be reproduced or utilized in any part, form or by any means, electronic or mechanical, including photocopying and microfilm, without permission in writing from TOWE.

13 SAR General Measurement Procedures

13.1 SAR Testing with 802.11 Transmitters

The normal network operating configurations of 802.11 transmitters are not suitable for SAR measurements. Unpredictable fluctuations in network traffic and antenna diversity conditions can introduce undesirable variations in SAR results. The SAR for these devices should be measured using chipset based test mode software to ensure the results are consistent and reliable. See KDB Publication 248227 D01 for more details.

A Wi-Fi device must be configured to transmit continuously at the required data rate, channel bandwidth and signal modulation, using the highest transmission duty factor supported by the test mode tools for SAR measurement.

For WiFi SAR testing, a communication link is set up with some command for WiFi mode test. During the test, at the each test frequency channel, the EUT is operated at the RF continuous emission mode. Per KDB248227 D01, a minimum transmission duty factor of 85% is required to avoid certain hardware and device implementation issues related to wide range SAR scaling. The reported SAR must be scaled to 100% transmission duty factor to determine compliance at the maximum tune-up tolerance limit.

13.1.1 Initial Test Position Procedure

DSSS and OFDM configurations are considered separately according to the required SAR procedures. SAR is measured in the initial test position using the 802.11 transmission mode configuration required by the DSSS procedure or initial test configuration and subsequent test configuration(s) according to the OFDM procedures. The initial test position procedure is described in the following:

1. When the reported SAR of the initial test position is ≤ 0.4 W/kg, further SAR measurement is not required for the other (remaining) test positions in that exposure configuration and 802.11 transmission mode combinations within the frequency band or aggregated band. SAR is also not required for that exposure configuration in the subsequent test configuration(s).
2. When the reported SAR of the initial test position is > 0.4 W/kg, SAR is repeated for the 802.11 transmission mode configuration tested in the initial test position using subsequent highest extrapolated or estimated 1-g SAR conditions determined by area scans or next closest/smallest test separation distance and maximum RF coupling test positions based on manufacturer justification, on the highest maximum output power channel, until the reported SAR is ≤ 0.8 W/kg or all required test positions (left, right, touch, tilt or subsequent surfaces and edges) are tested.
3. For all positions/configurations tested using the initial test position and subsequent test positions, when the reported SAR is > 0.8 W/kg, SAR is measured for these test positions/configurations on the subsequent next highest measured output power channel(s) until the reported SAR is ≤ 1.2 W/kg or all required channels are tested. a) Additional power measurements may be required for this step, which should be limited to those necessary for identifying the subsequent highest output power channels.

13.1.2 Initial Test Configuration Procedure

An initial test configuration is determined for OFDM transmission modes according to the channel bandwidth, modulation and data rate combination(s) with the highest maximum output power specified for production units in each standalone and aggregated frequency band. SAR is measured using the highest measured maximum output power channel. For configurations with the same specified or measured maximum output power, additional transmission mode and test channel selection procedures are required. SAR test reduction for subsequent highest output test channels is determined according to reported SAR of the initial test configuration.
For next to the ear, hotspot mode and UMC mini-tablet exposure configurations where multiple test positions are required, the initial test position procedure is applied to minimize the number of test positions required for SAR measurement using the initial test configuration transmission mode. For fixed exposure conditions that do not have multiple SAR test positions, SAR is measured in the transmission mode determined by the initial test configuration.
When the reported SAR of the initial test configuration is > 0.8 W/kg, SAR measurement is required for subsequent next highest measured output power channel(s) in the initial test configuration until reported SAR is ≤ 1.2 W/kg or all required channels are tested.

All rights reserved. Unless otherwise specified, no part of this report may be reproduced or utilized in any part, form or by any means, electronic or mechanical, including photocopying and microfilm, without permission in writing from TOWE.

13.1.3 Subsequent Test Configuration Procedures

For OFDM configurations in each frequency Band and aggregated Band, SAR is evaluated for initial test configuration using the fixed test position or the initial test position on procedure. When the highest reported SAR (for the initial test configuration), adjusted by the ratio of the specified maximum output power of the subsequent test configuration to initial test configuration, is ⩽ 1.2 W/kg for 1g SAR and ⩽ 3.0 W/kg for 10g SAR, no additional SAR tests for the subsequent test configurations are required.

13.1.4 2.4 GHz SAR Procedures

Separate SAR procedures are applied to DSSS and OFDM configurations in the 2.4 GHz band to simplify DSSS test requirements. For 802.11b DSSS SAR measurements, DSSS SAR procedure applies to fixed exposure test position and initial test position procedure applies to multiple exposure test positions.

A) 802.11b DSSS SAR Test Requirements

SAR is measured for 2.4 GHz 802.11b DSSS using either a fixed test position or, when applicable, the initial test position procedure. SAR test reduction is determined according to the following:

1. When the reported SAR of the highest measured maximum output power channel for the exposure configuration is ⩽ 0.8 W/kg, no further SAR testing is required for 802.11b DSSS is that exposure configuration.

2. When the reported SAR is > 0.8 W/kg, SAR is required for that exposure configuration using the next highest measured output power channel. When any reported SAR is > 1.2 W/kg, SAR is required for the third channel; i.e., all channels require testing.

B) 2.4 GHz 802.11g/n OFDM SAR Test Exclusion Requirements

When SAR measurement is required for 2.4 GHz 802.11g/n OFDM configurations, the measurement and test reduction procedures for OFDM are applied (section 5.3 of of KDB248227 D01). SAR is not required for the following 2.4 GHz OFDM conditions.

1. When KDB Publication 447498 SAR test exclusion applies to the OFDM configuration.

2. When the highest reported SAR for DSSS is adjusted by the ratio of OFDM to DSSS specified maximum output power and the adjusted SAR is ≤ 1.2 W/kg.

C) SAR Test Requirements for OFDM configurations

When SAR measurement is required for 802.11 g/n OFDM configurations, each standalone and frequency aggregated band is considered separately for SAR test reduction. In applying the initial test configuration and subsequent test configuration procedures, the 802.11 transmission configuration with the highest specified maximum output power and the channel within a test configuration with the highest measured maximum output power should be clearly distinguished to apply the procedures.

All rights reserved. Unless otherwise specified, no part of this report may be reproduced or utilized in any part, form or by any means, electronic or mechanical, including photocopying and microfilm, without permission in writing from TOWE.

13.1.5 5 GHz SAR Procedures

13.1.5.1 U-NII-1 and U-NII-2A Bands

For devices that operate in only one of the U-NII-1 and U-NII-2A bands, the normally required SAR procedures for OFDM configurations are applied. For devices that operate in both U-NII bands using the same transmitter and antenna(s), SAR test reduction is determined according to the following:

1) When the same maximum output power is specified for both bands, begin SAR measurement in U-NII-2A band by applying the OFDM SAR requirements. If the highest reported SAR for a test configuration is ≤ 1.2 W/kg, SAR is not required for U-NII-1 band for that configuration (802.11 mode and exposure condition); otherwise, both bands are tested independently for SAR.
2) When different maximum output power is specified for the bands, begin SAR measurement in the band with higher specified maximum output power. The highest reported SAR for the tested configuration is adjusted by the ratio of lower to higher specified maximum output power for the two bands. When the adjusted SAR is ≤ 1.2 W/kg, SAR is not required for the band with lower maximum output power in that test configuration; otherwise, both bands are tested independently for SAR.
3) The two U-NII bands may be aggregated to support a 160 MHz channel on channel number 50. Without additional testing, the maximum output power for this is limited to the lower of the maximum output power certified for the two bands. When SAR measurement is required for at least one of the bands and the highest reported SAR adjusted by the ratio of specified maximum output power of aggregated to standalone band is > 1.2 W/kg, SAR is required for the 160 MHz channel. This procedure does not apply to an aggregated band with maximum output higher than the standalone band(s); the aggregated band must be tested independently for SAR. SAR is not required when the 160 MHz channel is operating at a reduced maximum power and also qualifies for SAR test exclusion.

13.1.5.2 U-NII-2C and U-NII-3 Bands

The frequency range covered by these bands is 380 MHz (5.47 – 5.85 GHz), which requires a minimum of at least two SAR probe calibration frequency points to support SAR measurements. when Terminal Doppler Weather Radar (TDWR) restriction applies, all channels that operate at 5.60 – 5.65 GHz must be included to apply the SAR test reduction and measurement procedures.

When the same transmitter and antenna(s) are used for U-NII-2C band and U-NII-3 band or 5.8 GHz band of §15.247, the bands may be aggregated to enable additional channels with 20, 40 or 80 MHz bandwidth to span across the band gap, as illustrated in Appendix B. The maximum output power for the additional band gap channels is limited to the lower of those certified for the bands. Unless band gap channels are permanently disabled, they must be considered for SAR testing. The frequency range covered by these bands is 380 MHz (5.47 – 5.85 GHz), which requires a minimum of at least two SAR probe calibration frequency points to support SAR measurements. To maintain SAR measurement accuracy and to facilitate test reduction, the channels in U-NII-2C band above 5.65 GHz may be grouped with the 5.8 GHz channels in U-NII-3 or §15.247 band to enable two SAR probe calibration frequency points to cover the bands, including the band gap channels. When band gap channels are supported and the bands are not aggregated for SAR testing, band gap channels must be considered independently in each band according to the normally required OFDM SAR measurement and probe calibration frequency points requirements.

13.1.6 OFDM Transmission Mode and SAR Test Channel Selection

When the same maximum output power was specified for multiple OFDM transmission mode configurations in a frequency band or aggregated band, SAR is measured using the configuration with the largest channel bandwidth, lowest order modulation and lowest data rate. When the maximum output power of a channel is the same for equivalent OFDM configurations; for example, 802.11a, 802.11n and 802.11ac or 802.11g and 802.11n with the same channel bandwidth, modulation and data rate etc., the lower order 802.11 mode i.e., 802.11a, then 802.11n and 802.11ac or 802.11g then 802.11n, is used for SAR measurement. When the maximum output power are the same for multiple test channels, either according to the default or additional power measurement requirements, SAR is measured using the channel closest to the middle of the frequency band or aggregated band. When there are multiple channels with the same maximum output power, SAR is measured using the higher number channel.

13.1.7 MIMO SAR Considerations

Per KDB 248227 D01, the simultaneous SAR provisions in KDB 447498 D01v06 should be applied to determine simultaneous transmission SAR test exclusion for WIFI MIMO. If the sum of 1g single transmission chain SAR measurements is <1.6 W/kg, no additional SAR measurements for MIMO are required. Alternatively, SAR for MIMO can be measured with all antennas transmitting simultaneously at the specified maximum output power of MIMO operation.

All rights reserved. Unless otherwise specified, no part of this report may be reproduced or utilized in any part, form or by any means, electronic or mechanical, including photocopying and microfilm, without permission in writing from TOWE.

14 Conducted Power

WIFI 2.4G						
Mode	Channel	Frequency (MHz)	Data Rate (Mbps)	Average Power (dBm)	Tune up (dBm)	SAR Test
802.11b	1	2412	1	**13.43**	14.0	Yes
	6	2437		13.18	14.0	No
	11	2462		13.35	14.0	No
	12	2467		13.39	14.0	No
	13	2472		13.38	14.0	No
802.11g	1	2412	6	No Required	14.0	No
	6	2437			14.0	No
	11	2462			14.0	No
	12	2467			14.0	No
	13	2472			14.0	No
802.11 VHT20	1	2412	6.5	No Required	14.0	No
	6	2437			14.0	No
	11	2462			14.0	No
	12	2467			14.0	No
	13	2472			14.0	No
802.11 VHT40	3	2422	13.5	No Required	14.0	No
	6	2437			14.0	No
	9	2452			14.0	No
	10	2457			14.0	No
	11	2462			14.0	No
802.11ax HT20	1	2412	MCS0	No Required	14.0	No
	6	2437			14.0	No
	11	2462			14.0	No
	12	2467			14.0	No
	13	2472			14.0	No
802.11ax HT40	3	2422	MCS0	No Required	14.0	No
	6	2437			14.0	No
	9	2452			14.0	No
	10	2457			14.0	No
	11	2462			14.0	No

WIFI 5G							
5GHz	mode	Channel	Frequency (MHz)	Data Rate (Mbps)	Average Power (dBm)	Tune up (dBm)	SAR Test
802.11a	U-NII-1	36	5180	6	16.24	17.0	No
		40	5200		16.28	17.0	No
		48	5240		16.54	17.0	No
	U-NII-2A	52	5260		**16.30**	17.0	Yes
		60	5300		**16.31**	17.0	Yes
		64	5320		**16.25**	17.0	Yes
	U-NII-2C	100	5500		**14.33**	15.0	Yes
		116	5580		**14.48**	15.0	Yes
		140	5700		**14.27**	15.0	Yes
		144	5720		14.25	15.0	No
	U-NII-3	149	5745		**15.21**	16.0	Yes
		157	5785		**15.28**	16.0	Yes
		165	5825		**14.72**	16.0	Yes
802.11-VHT20	U-NII-1	36	5180	MCS0	No Required	17.0	No
		40	5200			17.0	No
		48	5240			17.0	No
	U-NII-2A	52	5260		No Required	17.0	No
		60	5300			17.0	No
		64	5320			17.0	No
	U-NII-2C	100	5500		No Required	15.0	No
		116	5580			15.0	No

All rights reserved. Unless otherwise specified, no part of this report may be reproduced or utilized in any part, form or by any means, electronic or mechanical, including photocopying and microfilm, without permission in writing from TOWE.

		140	5700			15.0	No
		144	5720			15.0	No
	U-NII-3	149	5745		No Required	16.0	No
		157	5785			16.0	No
		165	5825			16.0	No
802.11-VHT40	U-NII-1	38	5190	MCS0	No Required	16.5	No
		46	5230			16.5	No
	U-NII-2A	54	5270		No Required	16.5	No
		62	5310			16.5	No
	U-NII-2C	102	5510		No Required	14.5	No
		110	5550			14.5	No
		134	5670			14.5	No
		142	5710			14.5	No
	U-NII-3	151	5755		No Required	15.5	No
		159	5795			15.5	No
802.11-VHT80	U-NII-1	42	5210	MCS0	No Required	15.5	No
	U-NII-2A	58	5290		No Required	15.5	No
	U-NII-2C	106	5530		No Required	15.5	No
		122	5610			15.5	No
		138	5690			15.5	No
	U-NII-3	155	5775		No Required	15.5	No
802.11-VHT160	U-NII-2A	50	5250	MCS0	No Required	14.5	No
	U-NII-2C	114	5570		No Required	12.5	No
802.11ax-20	U-NII-1	36	5180	MCS0	No Required	17.0	No
		40	5200			17.0	No
		48	5240			17.0	No
	U-NII-2A	52	5260		No Required	17.0	No
		60	5300			17.0	No
		64	5320			17.0	No
	U-NII-2C	100	5500		No Required	15.0	No
		116	5580			15.0	No
		140	5700			15.0	No
		144	5720			15.0	No
	U-NII-3	149	5745		No Required	16.0	No
		157	5785			16.0	No
		165	5825			16.0	No
802.11ax-40	U-NII-1	38	5190	MCS0	No Required	16.5	No
		46	5230			16.5	No
	U-NII-2A	54	5270		No Required	16.5	No
		62	5310			16.5	No
	U-NII-2C	102	5510		No Required	14.5	No
		110	5550			14.5	No
		134	5670			14.5	No
		142	5710			14.5	No
	U-NII-3	151	5755		No Required	15.5	No
		159	5795			15.5	No
802.11ax 80M	U-NII-1	42	5210	MCS0	No Required	15.5	No
	U-NII-2A	58	5290		No Required	15.5	No
	U-NII-2C	106	5530		No Required	14.5	No
		122	5610			14.5	No
		138	5690			14.5	No
	U-NII-3	155	5775		No Required	15.5	No
802.11ax 160M	U-NII-2A	50	5250	MCS0	No Required	14.5	No
	U-NII-2C	114	5570		No Required	12.5	No

All rights reserved. Unless otherwise specified, no part of this report may be reproduced or utilized in any part, form or by any means, electronic or mechanical, including photocopying and microfilm, without permission in writing from TOWE.

WIFI 6G Ant1 SISO						
Mode	Channel	Frequency (MHz)	Data Rate (Mbps)	Average Power (dBm)	Tune up (dBm)	SAR Test
802.11a	1	5955	MCS0	No Required	8.00	No
	45	6175			8.00	No
	93	6415			8.00	No
	97	6435			8.00	No
	105	6475			8.00	No
	113	6515			8.00	No
	117	6535			8.00	No
	153	6715			8.00	No
	181	6855			8.00	No
	185	6875			8.00	No
	213	7015			8.00	No
	233	7115			8.00	No
802.11ax160	15	6025	MCS0	**12.28**	13.00	Yes
	47	6185		12.23	13.00	No
	79	6345		**12.25**	13.00	Yes
	111	6505		**12.51**	13.00	Yes
	143	6665		12.24	13.00	No
	175	6825		**12.53**	13.00	Yes
	207	6985		**12.26**	13.00	Yes

WIFI 6G MIMO						
Mode	Channel	Frequency (MHz)	Data Rate (Mbps)	Average Power (dBm)	Tune up (dBm)	SAR Test
802.11a	1	5955	MCS0	No Required	4.50	No
	45	6175			4.50	No
	93	6415			4.50	No
	97	6435			2.50	No
	105	6475			2.50	No
	113	6515			2.50	No
	117	6535			4.50	No
	153	6715			4.50	No
	181	6855			4.50	No
	185	6875			4.50	No
	213	7015			4.50	No
	233	7115			4.50	No
802.11ax20	1	5955	MCS0	No Required	5.50	No
	45	6175			5.50	No
	93	6415			5.50	No
	97	6435			5.50	No
	105	6475			5.50	No
	113	6515			5.50	No
	117	6535			5.50	No
	153	6715			5.50	No
	181	6855			5.50	No
	185	6875			5.50	No
	213	7015			5.50	No
	233	7115			5.50	No

All rights reserved. Unless otherwise specified, no part of this report may be reproduced or utilized in any part, form or by any means, electronic or mechanical, including photocopying and microfilm, without permission in writing from TOWE.

802.11ax40	3	5965	MCS0	No Required	7.50	No
	43	6165			7.50	No
	91	6405			7.50	No
	99	6445			7.50	No
	107	6485			7.50	No
	115	6525			7.50	No
	123	6565			7.50	No
	155	6725			7.50	No
	179	6845			7.50	No
	187	6885			7.50	No
	211	7005			7.50	No
	227	7085			7.50	No
802.11ax80	7	5985	MCS0	No Required	10.50	No
	39	6145			10.50	No
	87	6385			10.50	No
	103	6465			10.50	No
	119	6545			10.50	No
	135	6625			10.50	No
	151	6705			10.50	No
	167	6785			10.50	No
	183	6865			10.50	No
	199	6945			10.50	No
	215	7025			10.50	No
802.11ax160	15	6025	MCS0	**11.43**	12.50	Yes
	47	6185		11.26	12.50	No
	79	6345		**11.42**	12.50	Yes
	111	6505		**11.91**	12.50	Yes
	143	6665		11.40	12.50	No
	175	6825		**11.55**	12.50	Yes
	207	6985		**11.83**	12.50	Yes

BT		Average Conducted Power(dBm)			Tune up (dBm)
Mode	Channel	0	39	78	
BT	GFSK	9.62	**9.67**	9.61	11.50
	π/4DQPSK	7.17	7.20	7.12	8.50
	8DPSK	6.64	6.65	6.58	8.50
Mode	Channel	0	19	39	Tune up (dBm)
BLE 1M	GFSK	9.65	9.56	9.63	11.50
BLE 2M	GFSK	9.60	9.59	9.63	11.50

All rights reserved. Unless otherwise specified, no part of this report may be reproduced or utilized in any part, form or by any means, electronic or mechanical, including photocopying and microfilm, without permission in writing from TOWE.

15 SAR Data Summary

General Notes:

1) The Highest Reported SAR Plot refers to Appendix B.

2) Per KDB 447498 D01, testing of other required channels within the operating mode of a frequency band is not required when the reported 1g or 10g SAR for the mid-band or highest output power channel is:

- ≤ 0.8W/kg for 1g or 2.0W/kg for 10g respectively, when the transmission band is ≤ 100MHz.
- ≤ 0.6 W/kg or 1.5 W/kg, for 1g or 10g respectively, when the transmission band is between 100 MHz and 200MHz.
- ≤ 0.4 W/kg or 1.0 W/kg, for 1g or 10g respectively, when the transmission band is ≥ 200MHz.

For WIFI 5G:

1) When the same maximum output power is specified for both bands, begin SAR measurement in U-NII-2A band by applying the OFDM SAR requirements. As the highest reported SAR for a test configuration is ⩽ 1.2 W/kg, SAR is not required for U-NII-1 band for that configuration.

For WIFI 6G:

1) Absorbed power density (APD) using a 4cm^2 averaging area is reported based on SAR measurements.
2) Per FCC guidance and equipment manufacturer guidance, the power density results were scaled according to IEC 62479:2010 for the portion of the measurement uncertainty > 30%. Total expanded uncertainty of 2.67 dB (84.93%) was used to determine the psPD measurement scaling factor.
3) Per April 2021 TCB Workshop, For the highest SAR test configurations also measure incident PD (total) using power-density reconstruction method in 2 mm closest measurement plane.
4) IPD is measured for all edges and surfaces of the device with a transmitting antenna located within 25 mm from that surface or edge.
5) The measurement procedure consists of measuring the PDinc at two different distances: 2 mm (compliance distance) and λ/5. The grid extents should be large enough to fully capture the transmitted energy. The grid step should be fine enough to demonstrate that the integrated Power Density iPDn fulfil the criterion described below. Since iPD ratio between the two distances is ≥ -1dB, the grid step (0.0625) was sufficient for determining compliance at d=2mm.

$$10 \cdot log_{10} \frac{iPD_n(2mm)}{iPD_n(\lambda/5)} \geq -1$$

All rights reserved. Unless otherwise specified, no part of this report may be reproduced or utilized in any part, form or by any means, electronic or mechanical, including photocopying and microfilm, without permission in writing from TOWE.

15.1 SAR Measurement Result of WIFI 2.4G

MIMO Test Results									
Test position	Mode	Ch./Freq. (MHz)	SAR (W/kg) 1g	Duty Cycle	Duty Cycle Scaling Factor	Conducted Power (dBm)	Tune up Limit (dBm)	Scaling Factor	Reported 1g SAR (W/kg)
Body 0mm									
Back Face	802.11b	1/2412	0.247	100.00%	1.000	13.43	14.00	1.140	**0.282**
Body 25mm									
Top Edge	802.11b	1/2412	0.035	100.00%	1.000	13.43	14.00	1.140	0.040

Table 3： SAR of WIFI 2.4G.

Mode	Tune-up (dBm)	Tune-up (mw)	Highest Reported SAR1-g(W/kg)	Adjusted SAR1-g(W/kg)	SAR test
802.11b	14.00	25.12	0.282	/	Yes
802.11g	14.00	25.12	/	0.282	No
802.11 VHT20	14.00	25.12	/	0.282	No
802.11 VHT40	14.00	25.12	/	0.282	No
802.11ax 20M	14.00	25.12	/	0.282	No
802.11ax 40M	14.00	25.12	/	0.282	No

15.2 SAR Measurement Result of WIFI 5G

MIMO Test Results									
Test position	Mode	Ch./Freq. (MHz)	SAR (W/kg) 1g	Duty Cycle	Duty Cycle Scaling Factor	Conducted Power (dBm)	Tune up Limit (dBm)	Scaling Factor	Reported 1g SAR (W/kg)
U-NII-2A Body 0mm									
Back Face	802.11a	60/5300	0.760	100.00%	1.000	16.31	17.00	1.172	0.891
Back Face	802.11a	52/5260	0.789	100.00%	1.000	16.30	17.00	1.175	**0.927**
Back Face	802.11a	64/5320	0.772	100.00%	1.000	16.25	17.00	1.189	0.918
U-NII-2A Body 25mm									
Top Edge	802.11a	60/5300	0.165	100.00%	1.000	16.31	17.00	1.172	0.193
U-NII-2C Body 0mm									
Back Face	802.11a	116/5580	0.690	100.00%	1.000	14.48	15.00	1.127	**0.778**
Back Face	802.11a	100/5500	0.648	100.00%	1.000	14.33	15.00	1.167	0.756
Back Face	802.11a	140/5700	0.628	100.00%	1.000	14.27	15.00	1.183	0.743
U-NII-2C Body 25mm									
Top Edge	802.11a	116/5580	0.231	100.00%	1.000	14.48	15.00	1.127	0.260
U-NII-3 Body 0mm									
Back Face	802.11a	157/5785	0.673	100.00%	1.000	15.28	16.00	1.180	0.794
Back Face	802.11a	149/5745	0.632	100.00%	1.000	15.21	16.00	1.199	0.758
Back Face	802.11a	165/5825	0.689	100.00%	1.000	14.72	16.00	1.343	**0.925**
U-NII-3 Body 25mm									
Top Edge	802.11a	157/5785	0.301	100.00%	1.000	15.28	16.00	1.180	0.355

Table 4： SAR of WIFI 5G.

All rights reserved. Unless otherwise specified, no part of this report may be reproduced or utilized in any part, form or by any means, electronic or mechanical, including photocopying and microfilm, without permission in writing from TOWE.

15.3 SAR Measurement Result of WIFI 6G

Ant1 Test Results											
Test position	Mode	Ch./Freq. (MHz)	SAR (W/kg) 1g	Duty Cycle	Duty Cycle Scaling Factor	Conducted Power (dBm)	Tune up Limit (dBm)	Scaling Factor	Reported 1g SAR (W/kg)	Measured APD (W/m^2)	Reported APD (W/m^2)
Body 0mm											
Back Face	802.11ax 160M	175/6825	0.183	100.00%	1.000	12.53	13.00	1.114	0.204	0.701	0.781
Back Face	802.11ax 160M	15/6025	0.231	100.00%	1.000	12.28	13.00	1.180	0.273	1.130	1.334
Back Face	802.11ax 160M	79/6345	0.247	100.00%	1.000	12.25	13.00	1.189	0.294	1.040	1.236
Back Face	802.11ax 160M	111/6505	0.519	100.00%	1.000	12.51	13.00	1.119	**0.581**	2.500	2.799
Back Face	802.11ax 160M	207/6985	0.142	100.00%	1.000	12.26	13.00	1.186	0.168	0.460	0.545
Body 25mm											
Top Edge	802.11ax 160M	175/6825	0.018	100.00%	1.000	12.53	13.00	1.114	0.020	0.076	0.085
MIMO Test Results											
Test position	Mode	Ch./Freq. (MHz)	SAR (W/kg) 1g	Duty Cycle	Duty Cycle Scaling Factor	Conducted Power (dBm)	Tune up Limit (dBm)	Scaling Factor	Reported 1g SAR (W/kg)	Measured APD (W/m^2)	Reported APD (W/m^2)
Body 0mm											
Back Face	802.11ax 160M	111/6505	0.225	100.00%	1.000	11.91	12.50	1.146	0.258	1.010	1.157
Back Face	802.11ax 160M	175/6825	0.238	100.00%	1.000	11.55	12.50	1.245	0.296	1.020	1.269
Back Face	802.11ax 160M	15/6025	0.266	100.00%	1.000	11.43	12.50	1.279	**0.340**	1.370	1.753
Back Face	802.11ax 160M	79/6345	0.181	100.00%	1.000	11.42	12.50	1.282	0.232	0.783	1.004
Back Face	802.11ax 160M	207/6985	0.157	100.00%	1.000	11.83	12.50	1.167	0.183	0.665	0.776
Body 25mm											
Top Edge	802.11ax 160M	111/6505	0.035	100.00%	1.000	11.91	12.50	1.146	0.040	0.105	0.120

Table 5： SAR of WIFI 6G.

15.4 SAR Measurement Result of BT

Test position	Mode	Ch./Freq. (MHz)	SAR (W/kg) 1g	Duty Cycle	Duty Cycle Scaling Factor	Conducted Power (dBm)	Tune up Limit (dBm)	Scaling Factor	Reported 1g SAR (W/kg)
Body 0mm									
Back Face	DH5	39/2441	0.189	76.80%	1.302	9.67	11.50	1.524	**0.375**
Body 25mm									
Top Edge	DH5	39/2441	0.004	76.80%	1.302	9.67	11.50	1.524	0.008

Table 6： SAR of BT.

All rights reserved. Unless otherwise specified, no part of this report may be reproduced or utilized in any part, form or by any means, electronic or mechanical, including photocopying and microfilm, without permission in writing from TOWE.

15.5 PD Measurement Result of WIFI 6G

Test position	Mode	Ch./Freq. (MHz)	Gap (mm)	Grid Step (λ)	Conducted Power(dBm)	Tune up Limit(dBm)	iPDn	iPD ratio (≥ -1)	Normal psPD (W/m^2)	Total psPD (W/m^2)
Back face	802.11ax 160M	15/6025	2.000	0.0625	12.28	13.00	14	1.208	1.720	3.950
Back face	802.11ax 160M	15/6025	10.0	0.1250	12.28	13.00	10.6		0.789	1.100

Ant1 Test Results														
Test position	Mode	Ch./Freq. (MHz)	Gap (mm)	Grid Step (λ)	Normal psPD (W/m^2)	Total psPD (W/m^2)	Duty Cycle	Duty Cycle Scaling Factor	Conducted Power (dBm)	Tune up Limit (dBm)	Scaling Factor	Scaling Factor for Measurement Uncertainty	Reported Normal psPD (W/m^2)	Reported Total psPD (W/m^2)
Back face	802.11ax 160M	175/6825	2.000	0.0625	0.600	1.060	100.00%	1.000	12.53	13.00	1.114	1.5493	1.036	1.830
Top Edge	802.11ax 160M	175/6825	2.000	0.0625	0.290	0.655	100.00%	1.000	12.53	13.00	1.114	1.5493	0.501	1.131
Back face	802.11ax 160M	15/6025	2.000	0.0625	1.720	3.950	100.00%	1.000	12.28	13.00	1.180	1.5493	3.145	**7.223**
Back face	802.11ax 160M	15/6025	10.000	0.1250	0.789	1.100	100.00%	1.000	12.28	13.00	1.180	1.5493	1.443	2.012
Back face	802.11ax 160M	79/6345	2.000	0.0625	0.570	1.200	100.00%	1.000	12.25	13.00	1.189	1.5493	1.050	2.210
Back face	802.11ax 160M	111/6505	2.000	0.0625	0.827	0.151	100.00%	1.000	12.51	13.00	1.119	1.5493	1.434	0.262
Back face	802.11ax 160M	207/6985	2.000	0.0625	0.283	0.617	100.00%	1.000	12.26	13.00	1.186	1.5493	0.520	1.133
MIMO Test Results														
Test position	Mode	Ch./Freq. (MHz)	Gap (mm)	Grid Step (λ)	Normal psPD (W/m^2)	Total psPD (W/m^2)	Duty Cycle	Duty Cycle Scaling Factor	Conducted Power (dBm)	Tune up Limit (dBm)	Scaling Factor	Scaling Factor for Measurement Uncertainty	Reported Normal psPD (W/m^2)	Reported Total psPD (W/m^2)
Back face	802.11ax 160M	111/6505	2.000	0.0625	0.807	1.470	100.00%	1.000	11.91	12.50	1.146	1.5493	1.432	2.609
Top Edge	802.11ax 160M	111/6505	2.000	0.0625	0.336	0.516	100.00%	1.000	11.91	12.50	1.146	1.5493	0.596	0.916
Back face	802.11ax 160M	15/6025	2.000	0.0625	1.480	2.560	100.00%	1.000	11.43	12.50	1.279	1.5493	2.934	**5.074**
Back face	802.11ax 160M	79/6345	2.000	0.0625	0.930	1.560	100.00%	1.000	11.42	12.50	1.282	1.5493	1.848	3.099
Back face	802.11ax 160M	175/6825	2.000	0.0625	0.845	1.470	100.00%	1.000	11.55	12.50	1.245	1.5493	1.629	2.834
Back face	802.11ax 160M	207/6985	2.000	0.0625	0.655	1.200	100.00%	1.000	11.83	12.50	1.167	1.5493	1.184	2.169

Table 7： PD of WIFI 6G.

All rights reserved. Unless otherwise specified, no part of this report may be reproduced or utilized in any part, form or by any means, electronic or mechanical, including photocopying and microfilm, without permission in writing from TOWE.

16 Simultaneous Transmission Analysis

The Simultaneous Transmission Possibilities of this device are as below:

NO.	Simultaneous Tx Combination	Body
1	WIFI 5G MIMO + BT	Y
2	WIFI 2.4G MIMO + WIFI 5G MIMO	Y
3	WIFI 6G Ant1 + BT	Y
4	WIFI 6G MIMO + BT	Y
5	WIFI 2.4G MIMO + WIFI 6G Ant1	Y
6	WIFI 2.4G MIMO + WIFI 6G MIMO	Y

Summed SAR Analysis:

Test position	SAR_{max} (W/kg)					Summed SAR (W/kg)					
	WIFI 2.4G MIMO	WIFI 5G MIMO	WIFI 6G Ant1	WIFI 6G MIMO	BT						
	1	2	3	4	5	2+5	1+2	3+5	4+5	1+3	1+4
Back face	0.282	0.927	0.581	0.340	0.375	1.302	1.209	0.956	0.715	0.863	0.622
Top Edge	0.040	0.355	0.020	0.040	0.008	0.363	0.395	0.028	0.048	0.060	0.080

Total Exposure Radio Analysis:

The fields generated by the antennas can be correlated or uncorrelated. At different frequencies, fields are always uncorrelated, and the aggregate power density contributions can be summed according to spatially averaged values of corresponding sources at any point in space, r, to determine the total exposure ratio (TER). Assuming I sources, the TER at each point in space is equal to

$$TER^{uncorr}(r) = \sum_{i=1}^{I} ER_i = \sum_{i=1}^{I} \frac{S_{av,i}(r, f_i)}{S_{lim}(f_i)}$$

Where S_{av},i is the power density for the source I operating at a frequency fi and Slim is the power density limit as specified by the relevant standard.

Exposure from transmitters operating above and below 6GHz, where 6GHz denotes the transmission frequency where the basic restrictions change from being defined in terms of SAR to being defined in terms of power density, therefore uncorrelated and the TER is determined as

$$TER^{uncorr}(r) = \sum_{i=1}^{I} ER_i = \sum_{i=1}^{I} \frac{S_{av,i}(r, f_i)}{S_{lim}(f_i)}$$

According to the FCC guidance in TCBC workshop and IEC TR 63170, the total exposure ratio calculated by taking ratio of maximum reported SAR divided by SAR limit and adding it to maximum measured power density by its limit. Numerical sum of the ratios should be less 1. Therefore the simultaneous transmission should be follows:

$$TER = \sum_{n=1}^{N} \frac{SAR_n}{SAR_{n,limit}} + \sum_{n=1}^{N} \frac{S_{m,avg}}{S_{m,limit}} < 1$$

All rights reserved. Unless otherwise specified, no part of this report may be reproduced or utilized in any part, form or by any means, electronic or mechanical, including photocopying and microfilm, without permission in writing from TOWE.

For transmitters operating above 6000 MHz, it is necessary to perform an assessment against the PD (basic restriction up to 10 GHz and reference levels beyond). The exposure ratio for the m-th transmitter is given by:

$$max\left[\frac{SAR_m}{SAR_{limit}},\frac{APD_m}{APD_{limit}}\right] \qquad 5925\ MHz < f_m \leq 10\ GHz$$

Where:
SAR_m is the SAR value for the n-th transmitter/test frequency.
SAR_{limit} is the basic restriction limit that is applicable to the n-th transmitter/test frequency.
APD is the APD value for the m-th transmitter/test frequency.
APD_{limit} is the basic restriction limit that is applicable for the m-th transmitter/test frequency.

Total Exposure Ratio:

Test position		SAR_{max} (W/kg)			Power Density (mW/cm2)		Total Exposure Ratio (Limit: 1.0)			
		WIFI 2.4G MIMO	WIFI 5G MIMO	BT	WIFI 6G Ant1	WIFI 6G MIMO				
		1	2	5	3	4	3+5	4+5	1+3	1+4
Exposure Ratio	Back face	0.176	0.579	0.234	0.722	0.507	0.957	0.742	0.899	0.684
	Top Edge	0.025	0.222	0.005	0.113	0.092	0.118	0.097	0.138	0.117

All rights reserved. Unless otherwise specified, no part of this report may be reproduced or utilized in any part, form or by any means, electronic or mechanical, including photocopying and microfilm, without permission in writing from TOWE.

17 Measurement Uncertainty

The expanded SAR measurement uncertainty must be ≤ 30%, for a confidence interval of k = 2.

Input quantity X_i (source of uncertainty)	Unc. (±)	Prob. Dist. PDF_i	Unc. $a(x_i)$	c_i (1g)	c_i (10g)	U_i (1g) (%)	U_i (10g) (%)
Measurement system errors							
Probe calibration	18.6	N (k = 2)	2	1	1	9.3	9.3
Probe calibration drift	1.7	R	√3	1	1	1.0	1.0
Probe linearity and detection limit	0.9	R	√3	1	1	0.5	0.5
Broadband signal	0.5	R	√3	1	1	0.3	0.3
Probe isotropy	3.2	R	√3	1	1	1.8	1.8
Other probe and data acquisition errors	0.6	N	1	1	1	0.6	0.6
RF ambient and noise	3.0	R	√3	1	1	1.7	1.7
Probe positioning errors	0.5	N	1	0.33	0.33	0.2	0.2
Data processing errors	4.0	R	√3	1	1	2.3	2.3
Phantom and device (DUT or validation antenna) errors							
Measurement of phantom conductivity(σ)	2.5	N	1	0.78	0.71	2.0	1.8
Temperature effects (medium)	2.7	R	√3	0.78	0.71	1.2	1.1
Shell permittivity	14.0	R	√3	0.5	0.5	4.0	4.0
Distance between the radiating element of the DUT and the phantom medium	2.0	N	1	2	2	4.0	4.0
Repeatability of positioning the DUT or source against the phantom	2.9	N	1	1	1	2.9	2.9
Device holder effects	3.6	N	1	1	1	3.6	3.6
Effect of operating mode on probe sensitivity	2.4	R	√3	1	1	1.4	1.4
Time-average SAR	0.0	R	√3	1	1	0.0	0.0
Variation in SAR due to drift in output of DUT	2.5	N	1	1	1	2.5	2.5
Validation antenna uncertainty (validation measurement only)	0.0	N	1	1	1	0.0	0.0
Uncertainty in accepted power (validation measurement only)	0.0	N	1	1	1	0.0	0.0
Corrections to the SAR result (if applied)							
Phantom deviation from target (ε',σ)	1.9	N	1	1	0.84	1.9	1.6
SAR scaling	0.0	R	√3	1	1	0.0	0.0
Combined uncertainty	\					14.30	14.20
Expanded uncertainty and effective degrees of freedom （k = 2）	\					28.59	28.39

All rights reserved. Unless otherwise specified, no part of this report may be reproduced or utilized in any part, form or by any means, electronic or mechanical, including photocopying and microfilm, without permission in writing from TOWE.

Applicable for Power Density Measurements						
a	b	c	d	e	f=b*e/d	g
Error Description	Uncertainty Value (±dB)	Probability	Div.	Ci	Standard Uncertainty (±dB)	Vi (Veff)
Uncertainty terms dependent on the measurement system						
Probe Calibration	0.49	N	1	1	0.49	∞
Probe correction	0.00	R	1.732	1	0.00	∞
Frequency response (BW ≤1 GHz)	0.20	R	1.732	1	0.12	∞
Sensor cross coupling	0.00	R	1.732	1	0.00	∞
Isotropy	0.50	R	1.732	1	0.29	∞
Linearity	0.20	R	1.732	1	0.12	∞
Probe scattering	0.00	R	1.732	1	0.00	∞
Probe positioning offset	0.30	R	1.732	1	0.17	∞
Probe positioning repeatability	0.04	R	1.732	1	0.02	∞
Sensor mechanical offset	0.00	R	1.732	1	0.00	∞
Probe spatial resolution	0.00	R	1.732	1	0.00	∞
Field impedance dependance	0.00	R	1.732	1	0.00	∞
Amplitude and phase drift	0.00	R	1.732	1	0.00	∞
Amplitude and phase noise	0.04	R	1.732	1	0.02	∞
Measurement area truncation	0.00	R	1.732	1	0.00	∞
Data acquisition	0.03	N	1	1	0.03	∞
Sampling	0.00	R	1.732	1	0.00	∞
Field reconstruction	2.00	R	1.732	1	1.15	∞
Forward transformation	0.00	R	1.732	1	0.00	∞
Power density scaling	0.00	R	1.732	1	0.00	∞
Spatial averaging	0.10	R	1.732	1	0.06	∞
System detection limit	0.04	R	1.732	1	0.02	∞
Uncertainty terms dependent on the DUT and environmental factors						
Probe coupling with DUT	0.00	R	1.732	1	0.00	∞
Modulation response	0.40	R	1.732	1	0.23	∞
Integration time	0.00	R	1.732	1	0.00	∞
Response time	0.00	R	1.732	1	0.00	∞
Device holder influence	0.10	R	1.732	1	0.06	∞
DUT alignment	0.00	R	1.732	1	0.00	∞
RF ambient conditions	0.04	R	1.732	1	0.02	∞
Ambient reflections	0.04	R	1.732	1	0.02	∞
Immunity / secondary reception	0.00	R	1.732	1	0.00	∞
Drift of the DUT		R	1.732	1	0.00	∞
Combined Std. Uncertainty					1.33	
Expanded STD Uncertainty (95%)，K=2					2.67	

All rights reserved. Unless otherwise specified, no part of this report may be reproduced or utilized in any part, form or by any means, electronic or mechanical, including photocopying and microfilm, without permission in writing from TOWE.

18 Calibration Certificate

Please see the Appendix C

19 Test Setup Photos

Please see the Appendix D

Appendix A: System Check Plots

Appendix B: SAR Test Plots

Appendix C: Calibration certificate

Appendix D: Test Setup Photos

--- The End ---

All rights reserved. Unless otherwise specified, no part of this report may be reproduced or utilized in any part, form or by any means, electronic or mechanical, including photocopying and microfilm, without permission in writing from TOWE.