TEST REPORT

Product Name : Coffee Printer
Model Number : EB-Pro, EB-FC1, EB-FT4
FCC ID : 2BEN9-COFFEEPRINTER

Prepared for : Shenzhen Eve-Innovations Technology Co., Ltd.
Address : Rm 802, Jinqi Zhigu Building, No.1 Tangling Road, Taoyuan Street, Nanshan District, Shenzhen, China

Prepared by : EMTEK (DONGGUAN) Co., Ltd.
Address : -1&2/F.,Buiding 2,Zone A,Zhongda Marine Biotechnology Research and Development Base,N.9,Xincheng Avenue,Songshanhu High-technology Industrial Development Zone, Dongguan, Guangdong, China

TEL: +86-0769-22807078
FAX: +86-0769-22807079

Report Number : EDG2409230265E00101R
Date(s) of Tests : September 23, 2024 to December 05, 2024
Date of issue : December 05, 2024

TABLE OF CONTENTS

1 TEST RESULT CERTIFICATION 3

2 EUT TECHNICAL DESCRIPTION 5

3 SUMMARY OF TEST RESULT 6

4 TEST METHODOLOGY 7

4.1 GENERAL DESCRIPTION OF APPLIED STANDARDS 7
4.2 MEASUREMENT EQUIPMENT USED 7
4.3 DESCRIPTION OF TEST MODES 8

5 FACILITIES AND ACCREDITATIONS 10

5.1 FACILITIES 10
5.2 EQUIPMENT 10
5.3 LABORATORY ACCREDITATIONS AND LISTINGS 10

6 TEST SYSTEM UNCERTAINTY 11

7 SETUP OF EQUIPMENT UNDER TEST 12

7.1 RADIO FREQUENCY TEST SETUP 1 12
7.2 RADIO FREQUENCY TEST SETUP 2 12
7.3 CONDUCTED EMISSION TEST SETUP 15
7.4 BLOCK DIAGRAM CONFIGURATION OF TEST SYSTEM 16
7.5 SUPPORT EQUIPMENT 16

8 TEST REQUIREMENTS 17

8.1 DTS 6DB BANDWIDTH 17
8.2 DTS 99% BANDWIDTH 25
8.3 MAXIMUM PEAK CONDUCTED OUTPUT POWER 33
8.4 MAXIMUM POWER SPECTRAL DENSITY 41
8.5 UNWANTED EMISSIONS IN NON-RESTRICTED FREQUENCY BANDS 49
8.6 RADIATED SPURIOUS EMISSION 74
8.7 CONDUCTED EMISSION TEST 82
8.8 ANTENNA APPLICATION 85

1 TEST RESULT CERTIFICATION

Applicant	:	Shenzhen Eve-Innovations Technology Co., Ltd.
Address	:	Rm 802, Jinqi Zhigu Building, No.1 Tangling Road, Taoyuan Street, Nanshan District, Shenzhen, China
Manufacturer	:	Shenzhen Eve-Innovations Technology Co., Ltd.
Address	:	Rm 802, Jinqi Zhigu Building, No.1 Tangling Road, Taoyuan Street, Nanshan District, Shenzhen, China
EUT	:	Coffee Printer
Model Name	:	EB-Pro, EB-FC1, EB-FT4
Trademark	:	EVEBOT

Measurement Procedure Used:

APPLICABLE STANDARDS	
STANDARD	**TEST RESULT**
FCC 47 CFR Part 2 , Subpart J FCC 47 CFR Part 15, Subpart C	**PASS**
IC RSS-GEN, Issue 5(04-2018)+A1(03-2019)+A2(02-2021) IC RSS-247 Issue 3(08-2023)	**PASS**

The above equipment was tested by EMTEK (DONGGUAN) CO., LTD. The test data, data evaluation, test procedures, and equipment configurations shown in this report were made in accordance with the procedures given in ANSI C63.10 (2013) and the energy emitted by the sample EUT tested as described in this report is in compliance with the requirements of FCC Rules Part 2, Part 15.247, IC RSS-247 Issue 2 and IC RSS-GEN, Issue 5.

Date of Test : September 23, 2024 to December 05, 2024

Prepared by : Warren Deng

Warren Deng /Editor

Reviewer : Tim Dong

Tim Dong /Supervisor

Approve & Authorized Signer : Sam Lv / Manager

Modified History

Version	Report No.	Revision Date	Summary
V1.0	EDG2409230265E00101R	/	Original Report

2 EUT TECHNICAL DESCRIPTION

Characteristics	Description
Product:	Coffee Printer
Model Number:	EB-Pro, EB-FC1, EB-FT4 (The Model: EB-Pro is the same as the Model: EB-FC1 and EB-FT4 in hardware aspect. The difference in model number serves as marketing strategy.)
Sample Number:	2#
IEEE 802.11 WLAN Mode Supported:	802.11b 802.11g 802.11n(20MHz channel bandwidth) 802.11n(40MHz channel bandwidth)
Modulation:	DSSS with DBPSK/DQPSK/CCK for 802.11b; OFDM with BPSK/QPSK/16QAM/64QAM for 802.11g/n;
Operating Frequency Range:	2412-2462MHz for 802.11b/g/n(HT20); 2422-2452MHz for 802.11n(HT40);
Number of Channels:	11 channels for 802.11b/g/n(HT20); 7 Channels for 802.11n(HT40);
Transmit Power Max:	18.03 dBm(0.063533 W)
Hardware Version:	6.0
Antenna Type:	FPC Antenna
Antenna Gain:	2.66 dBi
Power Supply:	DC 12V 5A from Adapter
Date of Received	September 23, 2024
Temperature Range	0°C ~ +40°C

Note: for more details, please refer to the User's manual of the EUT.

3 SUMMARY OF TEST RESULT

FCC Part Clause	IC Part Clause	Test Parameter	Verdict	Remark
15.247(a)(2)	RSS-247 5.2(a) RSS-Gen 6.7	Emission Bandwidth	PASS	
15.247(b)(3)	RSS-247 5.4(d) RSS-Gen 6.12	Maximum Peak Conducted Output Power	PASS	
15.247(e)	RSS-247 5.2(b) RSS-Gen 6.12	Maximum Power Spectral Density Level	PASS	
15.247(d)	RSS-247 5.5	Unwanted Emission Into Non-Restricted Frequency Bands	PASS	
15.247(d)	RSS-247 5.5	Unwanted Emission Into Restricted Frequency Bands (conducted)	PASS	
15.247(d) 15.209 15.205	RSS-Gen 8.9 RSS-Gen 8.10 RSS-Gen 6.13 RSS-247 3.3 RSS-247 5.5	Radiated Spurious Emission	PASS	
15.207	RSS-Gen 8.8	Conducted Emission Test	PASS	
15.203 15.247(b)	RSS-Gen 6.8 RSS-247 5.4	Antenna Application	PASS	
NOTE1: N/A (Not Applicable) NOTE2: According to FCC OET KDB 558074, the report use radiated measurements in the restricted frequency bands. In addition, the radiated test is also performed to ensure the emissions emanating from the device cabinet also comply with the applicable limits.				

RELATED SUBMITTAL(S) / GRANT(S):

This submittal(s) (test report) is intended for **FCC ID: 2BEN9-COFFEEPRINTER** filing to comply with Section 15.247 of the FCC Part 15, Subpart C Rules.

4 TEST METHODOLOGY

4.1 GENERAL DESCRIPTION OF APPLIED STANDARDS

According to its specifications, the EUT must comply with the requirements of the following standards:
FCC 47 CFR Part 2, Subpart J
FCC 47 CFR Part 15, Subpart C
IC RSS-GEN, Issue 5(04-2018)+A1(03-2019)+A2(02-2021)
IC RSS-247 Issue 3(08-2023)
FCC KDB 558074 D01 15.247 Meas Guidance v05r02
FCC KDB 662911 D01 Multiple Transmitter Output v02r01

4.2 MEASUREMENT EQUIPMENT USED

Conducted Emission Test Equipment

Equipment	Manufacturer	Model No.	Serial No.	Last Cal.	Cal. Interval
EMI Test Receiver	Rohde&Schwarz	ESCI	100137	2024/4/29	1Year
AMN	Rohde&Schwarz	ENV216	101209	2024/4/28	1Year
AMN	Rohde&Schwarz	ENV216	100017	2024/4/28	1Year
RF Switching Unit	CDS	RSU-M2	38401	2024/4/28	1Year
AMN	Schwarzbeck	NNLK8121	8121-641	2024/4/28	1Year
AMN	Rohde&Schwarz	ESH3-Z6	101101	2024/4/28	1Year
AMN	Rohde&Schwarz	ESH3-Z6	101102	2024/4/28	1Year
Power Splitters & Dividers	Weinschel Associates	WA1506A	A1066	2024/4/28	1Year
Current Probe	FCC	F-52	8377	2024/4/28	1Year
Passive voltage probe	Rohde&Schwarz	ESH2-Z3	100122	2024/4/28	1Year
Cable	Rosenberger	RG 223/U	525178	2024/4/28	2Year
Cable	Rosenberger	RG223/U	525179	2024/4/28	2Year
Test Software	Farad	Ver.CON-03A1	--	N/A	N/A

For Spurious Emissions Test

Equipment	Manufacturer	Model No.	Serial No.	Last Cal.	Cal. Interval
EMI Test Receiver	Rohde&Schwarz	ESCI	101415	2024/4/28	1Year
Bi-log Hybrid Antenna	Schwarzbeck	VULB9163	141	2024/5/5	1Year
Pre-Amplifie	HP	8447F	OPTH64	2024/4/28	1 Year
Signal Analyzer	R&S	FSV30	103039	2024/4/28	1 Year
Horn Antenna	Schwarzbeck	BBHA9120D	1272	2024/5/5	1Year
Horn Antenna	Schwarzbeck	BBHA9170	9170-567	2024/5/5	1Year
Pre-Amplifie	LUNAR EM	PM1-18-40	J10100000081	2024/4/28	1Year
Loop antenna	Schwarzbeck	FMZB1519	1519-012	2024/5/5	1Year
Cable	Rosenberger	CIL02	A0783566	2024/4/28	2Year
Cable	HTS	CBL-26	D1245	2024/4/28	2Year
Cable	HTS	CBL-26	D8503	2024/4/28	2Year
Cable	HTS	CBL-26	/	2024/4/28	2Year
Test Software	Farad	Ver.RA-03A1	--	N/A	N/A

For other test items:

Equipment	Manufacturer	Model No.	Serial No.	Last Cal.	Cal. Interval
Wireless Connectivity Tester	R&S	CMW270	102543	2024/4/29	1Year
Automatic Control Unit	Tonscend	JS0806-2	21I8060480	2024/4/29	1Year

Signal Analyzer	KEYSIGHT	N9010B	MY60242456	2024/4/29	1Year
Analog Signal Generator	KEYSIGHT	N5173B	MY61252625	2024/4/29	1Year
UP/DOWN-Converter	R&S	CMW-Z800A	100274	2024/4/29	1Year
Vector Signal Generator	KEYSIGHT	N5182B	MY61252674	2024/4/29	1Year
Frequency Extender	KEYSIGHT	N5182BX07	MY59362541	2024/4/29	1Year
Temperature&Humidity test chamber	ESPEC	EL-02KA	12107166	2024/4/29	1 Year
6 db attenuator	AR-WORLDWIDE	6dB/50FH-006-100	324011	2024/4/28	1Year

Remark: *Each piece of equipment is scheduled for calibration once a year.*

4.3 DESCRIPTION OF TEST MODES

The EUT has been tested under its typical operating condition.
The EUT configuration for testing is installed on RF field strength measurement to meet the Commissions requirement and operating in a manner which intends to maximize its emission characteristics in a continuous normal application.

The Transmitter was operated in the normal operating mode. The TX frequency was fixed which was for the purpose of the measurements.

Test of channel included the lowest and middle and highest frequency to perform the test, then record on this report.

Those data rates (802.11b: 1 Mbps; 802.11g: 6 Mbps; 802.11n (HT20): MCS0; 802.11n (HT40): MCS0; 802.11ax (HE20): MCS0; 802.11ax (HE40): MCS0;) were used for all test.

Pre-defined engineering program for regulatory testing used to control the EUT for staying in continuous transmitting and receiving mode is programmed.

Frequency and Channel list for 802.11 b/g/n(HT20):

Channel	Frequency (MHz)	Channel	Frequency (MHz)	Channel	Frequency (MHz)
1	2412	5	2432	9	2452
2	2417	6	2437	10	2457
3	2422	7	2442	11	2462
4	2427	8	2447		

Frequency and Channel list for 802.11n(HT40):

Channel	Frequency (MHz)	Channel	Frequency (MHz)	Channel	Frequency (MHz)
3	2422	6	2437	9	2452
4	2427	7	2442		
5	2432	8	2447		

Test Frequency and Channel for 802.11 b/g/n(HT20):

Lowest Frequency		Middle Frequency		Highest Frequency	
Channel	Frequency (MHz)	Channel	Frequency (MHz)	Channel	Frequency (MHz)
1	2412	6	2437	11	2462

Test Frequency and channel for 802.11n(HT40):

Lowest Frequency		Middle Frequency		Highest Frequency	
Channel	Frequency (MHz)	Channel	Frequency (MHz)	Channel	Frequency (MHz)
3	2422	6	2437	9	2452

Multi-antenna correlation:

☐	Transmit Signals are Correlated
	Directional gain = 10 log[(10$^{G1/20}$ + 10$^{G2/20}$ + … + 10$^{GN/20}$)2 /N_{ANT}] dBi
☐	All Transmit Signals are Completely Uncorrelated
	Directional gain = 10 log[(10$^{G1/10}$ + 10$^{G2/10}$ + … + 10$^{GN/10}$)/N_{ANT}] dBi

5 FACILITIES AND ACCREDITATIONS

5.1 FACILITIES

All measurement facilities used to collect the measurement data are located at:
EMTEK (DONGGUAN) Co., Ltd.

-1&2/F.,Buiding 2,Zone A,Zhongda Marine Biotechnology Research and Development

Base,N.9,Xincheng Avenue,Songshanhu High-technology Industrial Development Zone, Dongguan,

Guangdong, China

5.2 EQUIPMENT

Radiated emissions are measured with one or more of the following types of linearly polarized antennas: tuned dipole, biconical, log periodic, bi-log, and/or ridged waveguide, horn. Spectrum analyzers with preselectors and quasi-peak detectors are used to perform radiated measurements.

Conducted emissions are measured with Line Impedance Stabilization Networks and EMI Test Receivers.

Calibrated wideband preamplifiers, coaxial cables, and coaxial attenuators are also used for making measurements.

All receiving equipment conforms to CISPR Publication 16-1, “Radio Interference Measuring Apparatus and Measurement Methods.”

5.3 LABORATORY ACCREDITATIONS AND LISTINGS

Site Description		
EMC Lab.	:	Accredited by CNAS, 2024.07.06 The certificate is valid until 2030.07.05 The Laboratory has been assessed and proved to be in compliance with CNAS-CL01:2018 The Certificate Registration Number is L3150 Accredited by FCC Designation Number: CN1300 Test Firm Registration Number: 945551 Accredited by A2LA, April 05, 2021 The Certificate Registration Number is 4321.02 Accredited by Industry Canada The Certificate Registration Number is CN0113
Name of Firm	:	EMTEK (DONGGUAN) Co., Ltd.
Site Location	:	-1&2/F.,Building 2, Zone A, Zhongda Marine Biotechnology Research and Development Base, No.9, Xincheng Avenue, Songshanhu High-technology Industrial Development Zone, Dongguan, Guangdong, China

6 TEST SYSTEM UNCERTAINTY

The following measurement uncertainty levels have been estimated for tests performed on the apparatus:

Test Parameter	Measurement Uncertainty
Radio Frequency	±1x10^-5
Maximum Peak Output Power Test	±1.0dB
Conducted Emissions Test	±2.0dB
Radiated Emission Test	±2.0dB
Power Density	±2.0dB
Occupied Bandwidth Test	±1.0dB
Band Edge Test	±3dB
All emission, radiated	±3dB
Antenna Port Emission	±3dB
Temperature	±0.5℃
Humidity	±3%

Measurement Uncertainty for a level of Confidence of 95%

7 SETUP OF EQUIPMENT UNDER TEST

7.1 RADIO FREQUENCY TEST SETUP 1

The WLAN component's antenna ports(s) of the EUT are connected to the measurement instrument per an appropriate attenuator. The EUT is controlled by PC/software to emit the specified signals for the purpose of measurements.

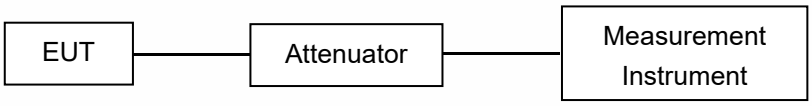

7.2 RADIO FREQUENCY TEST SETUP 2

The test site semi-anechoic chamber has met the requirement of NSA tolerance 4 dB according to the standards: ANSI C63.10. The test distance is 3m.The setup is according to the requirements in Section 13.1.4.1 of ANSI C63.10-2013 and CAN/CSA-CEI/IEC CISPR 22.
The maximal emission value is acquired by adjusting the antenna height, polarisation and turntable azimuth. Normally, the height range of antenna is 1 m to 4 m, the azimuth range of turntable is 0° to 360°, and the receive antenna has two polarizations Vertical (V) and Horizontal (H).

Below 30MHz：
The EUT is placed on a turntable 0.8 meters above the ground in the chamber, 3 meter away from the antenna (loop antenna). The Antenna should be positioned with its plane vertical at the specified distance from the EUT and rotated about its vertical axis for maximum response at each azimuth about the EUT. The center of the loop shall be 1 m above the ground. For certain applications, the loop antenna plane may also need to be positioned horizontally at the specified distance from the EUT.

Above 30MHz：
The EUT is placed on a turntable 0.8 meters above the ground in the chamber, 3 meter away from the antenna. The maximal emission value is acquired by adjusting the antenna height, polarisation and turntable azimuth. Normally, the height range of antenna is 1 m to 4 m, the azimuth range of turntable is 0° to 360°, and the receive antenna has two polarizations Vertical (V) and Horizontal (H).

Above 1GHz:
The EUT is placed on a turntable 1.5 meters above the ground in the chamber, 3 meter away from the antenna. The maximal emission value is acquired by adjusting the antenna height, polarisation and turntable azimuth. Normally, the height range of antenna is 1 m to 4 m, the azimuth range of turntable is 0° to 360°, and the receive antenna has two polarizations Vertical (V) and Horizontal (H).

Measurements shall be taken, using the following steps, at a test site that has been validated using the procedures of ANSI C63.4 or the latest CISPR 16-1-4 for measurements above 1 GHz, so as to simulate a near free-space environment (see RSS-Gen for applicable versions of ANSI and CISPR standards).
(1) Line the ground plane with absorbers between the transmitter and the receive antenna to minimize reflections. The absorbers used should have a minimum-rated attenuation of 20 dB through the measurement frequency range of interest. The absorbers shall be positioned to replicate the layout used when compliance with the applicable acceptability criterion was achieved, as set forth in the aforementioned standards on site validation.
(2) Set the height of the receive antenna to 1.5 m. The receive antenna must be one that was designed and fabricated to operate over the entire frequency range of interest, for example, an appropriate standard gain horn.
(3) The distance between the receive antenna and the radiating source shall be sufficient in order to ensure far-field conditions.
(4) Mount the transmitter at a height of 1.5 m.
(5) Configure the device under test (DUT) to produce the maximum power spectral density as measured while assessing compliance with Section 6.2.2 (i.e. channel frequency, modulation type and data rate). If the DUT is equipped with a detachable antenna and the antenna is intended for remote installation (i.e.

tower-mounted), the DUT may be substituted with a suitable signal generator. The level and frequency settings on the generator shall be set so as to reproduce the maximum power spectral density, measured within a 1 MHz bandwidth, obtained while assessing compliance to Section 6.2.2.
(6) Position the transmitter or the radiating antenna so that elevation pattern measurements can be taken.
(7) Find the 0° reference point in the horizontal plane.
(8) Care should be taken when positioning the receive antenna to avoid cross-polarization. Antennas of known mounting polarization should be assessed with the receive antenna oriented in the same polarity. If the polarization of the transmit antenna is unknown or the transmit antenna can be mounted in either polarization, e.i.r.p. measurements should be performed to find which
mounting polarity provides the highest e.i.r.p. value. Testing shall be carried out with the receive antenna and the DUT mounted in each polarity.
(9) The emission shall be centred on the display of the spectrum analyzer with the following settings:
i. If the power spectral density of the DUT was assessed with a peak detector and the antenna cannot be detached from the DUT, the spectrum analyzer shall be set to a peak detector with a resolution bandwidth and video bandwidth of 1 MHz.
ii. If the power spectral density of the DUT was assessed using a sample detector with power averaging and the antenna cannot be detached from the DUT, the spectrum analyzer shall be set to a sample detector, configured to produce 100 power averages and set with a resolution bandwidth, as well as a video bandwidth of 1 MHz.
iii. If the antenna can be detached from the DUT, a continuous wave (CW) signal equal to that of the power spectral density measurement may be used, the spectrum analyzer shall be set to peak detector with a resolution bandwidth and video bandwidth of 1 MHz.

(10) Rotate the turntable 360° recording the field strength at each step. Throughout the main beam of the antenna, the step size shall be kept to a maximum of 1°.
Once outside the main beam of the antenna, the maximum step size shall be as follows, when compared to the requirements of Section 6.2.2:
i. Between 0° and 8°, maximum step size of 2°;
ii. Between 8° and 40°, maximum step size of 4°;
iii. Between 40° and 45°, maximum step size of 1°;
iv. Between 45° and 90°, maximum step size of 5°.
Once the mask reaches 90°, the mask will be inverted and the step size will follow in the same manner as above.
For the purpose of this procedure, the main beam of the antenna is defined as the 3 dB beamwidth.
(11) Convert the measured field strength values in terms of e.i.r.p. density (dBW/1 MHz) using the following equation:

$$\text{e.i.r.p density(dBW/MHz)}=10\log((E*r)^2/30)$$

E = field strength in V/m
r = measurement distance in metres

(12) Plot the results against the emission mask with reference to the horizontal plane.
(13) Using the plot, the 0° can be rotated to determine the worst-case installation tilt angle.
(14) Testing shall be performed using the highest gain antenna for every antenna type, if applicable.
(15) Antenna type(s), antenna model number(s), and worst-case tilt angle(s) necessary to remain compliant with the elevation mask requirement set forth in Section 6.2.2(3) of RSS-247 shall be clearly indicated in the user manual.
The following figure is an example of a polar elevation mask measured using the Method 1 reference to dBμV/m at 3 m.

(a) Radiated Emission Test Set-Up, Frequency Below 30MHz

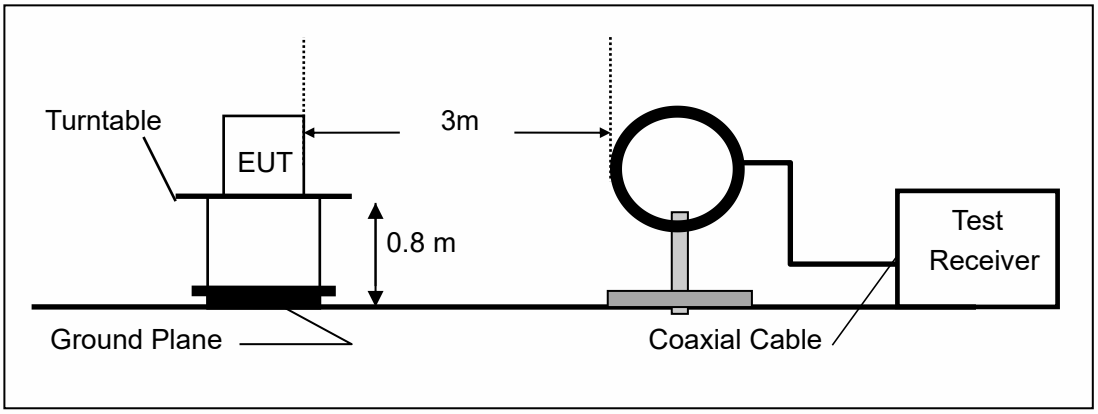

(b) Radiated Emission Test Set-Up, Frequency Below 1000MHz

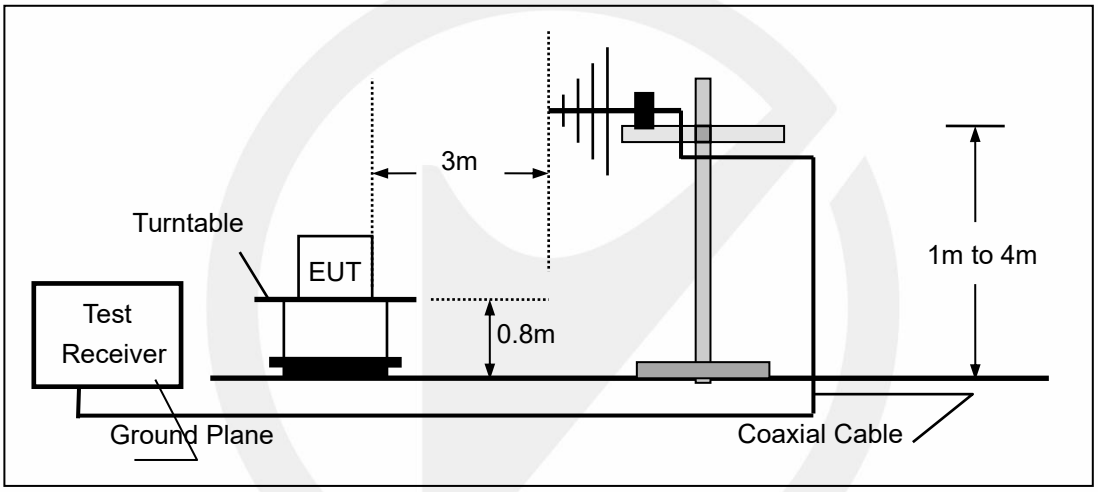

(c) Radiated Emission Test Set-Up, Frequency above 1000MHz

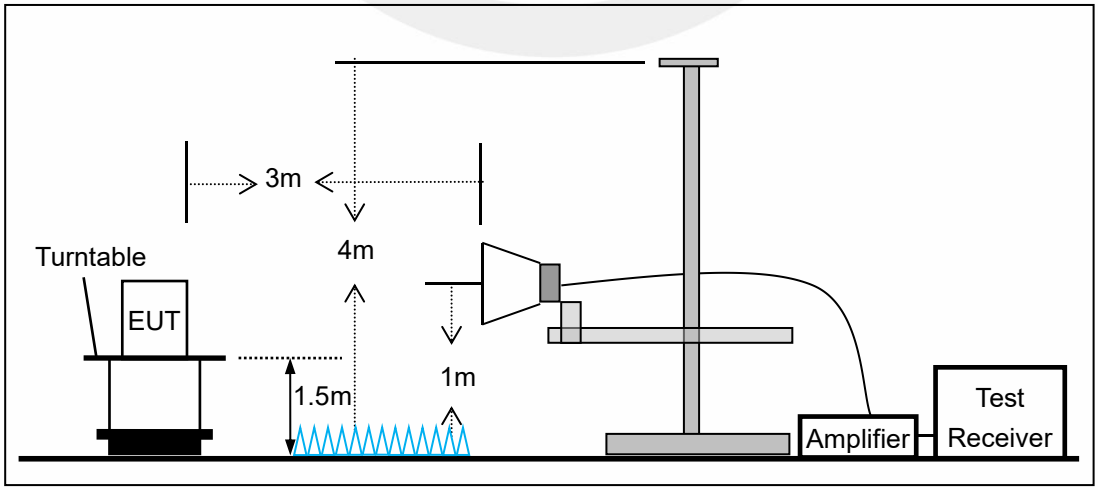

7.3 CONDUCTED EMISSION TEST SETUP

The mains cable of the EUT (maybe per AC/DC Adapter) must be connected to LISN. The LISN shall be placed 0.8 m from the boundary of EUT and bonded to a ground reference plane for LISN mounted on top of the ground reference plane. This distance is between the closest points of the LISN and the EUT. All other units of the EUT and associated equipment shall be at least 0.8m from the LISN.
Ground connections, where required for safety purposes, shall be connected to the reference ground point of the LISN and, where not otherwise provided or specified by the manufacturer, shall be of same length as the mains cable and run parallel to the mains connection at a separation distance of not more than 0.8 m.
According to the requirements in Section 13.1.4.1 of ANSI C63.10-2013 Conducted emissions from the EUT measured in the frequency range between 0.15 MHz and 30 MHz using CISPR Quasi-Peak and average detector mode.

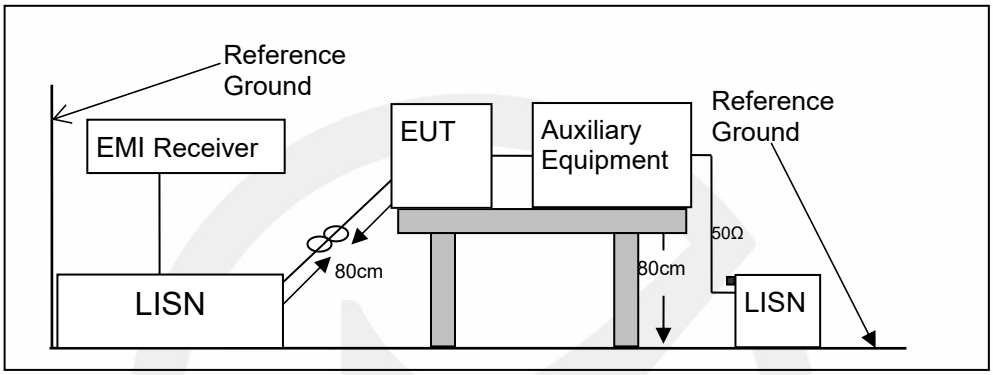

7.4 BLOCK DIAGRAM CONFIGURATION OF TEST SYSTEM

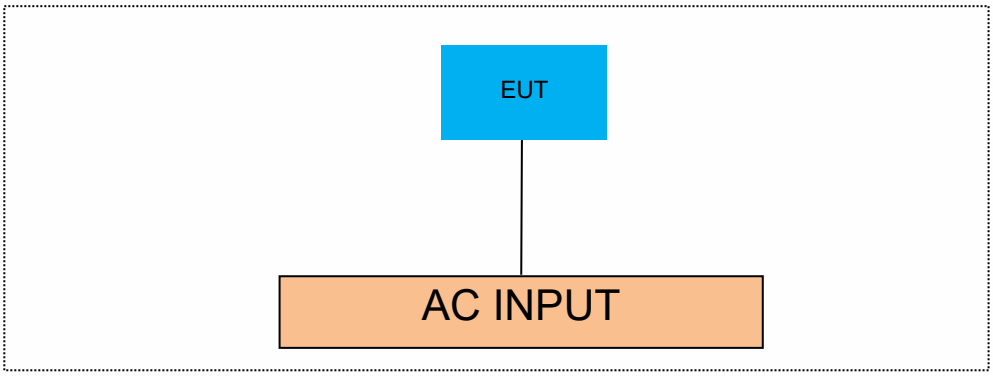

7.5 SUPPORT EQUIPMENT

Equipment List and Details			
Description	Manufacturer	Model	Serial Number
AC ADAPTER	Shenzhen baiyaxuan science and technology development co., ltd	BYX-12005000	/

Auxiliary Cable List and Details			
Cable Description	Length (m)	Shielded/Unshielded	With / Without Ferrite
/	/	/	/

Auxiliary Equipment List and Details			
Description	Manufacturer	Model	Serial Number
Notebook	Lenovo	E46L	11S168003748Z0LR06E0HG

Notes:

1. *All the equipment/cables were placed in the worst-case configuration to maximize the emission during the test.*
2. *Grounding was established in accordance with the manufacturer's requirements and conditions for the intended use.*

8 TEST REQUIREMENTS

8.1 DTS 6DB BANDWIDTH

8.1.1 Applicable Standard

According to FCC Part15.247 (a)(2) and KDB 558074 D01 15.247 Meas Guidance v05r02
According to RSS-247 5.2(a)

8.1.2 Conformance Limit

The minimum -6 dB bandwidth shall be at least 500 kHz.

8.1.3 Test Configuration

Test according to clause 6.1 radio frequency test setup

8.1.4 Test Procedure

The EUT was operating in WIFI mode and controlled its channel. Printed out the test result from the spectrum by hard copy function.
The RF output of EUT was connected to the spectrum analyzer by RF cable and attenuator. The path loss was compensated to the results for each measurement.
Set to the maximum power setting and enable the EUT transmit continuously
Set RBW = 100 kHz.
Set the video bandwidth (VBW) =300 kHz.
Set Span=2 times OBW
Set Detector = Peak.
Set Trace mode = max hold.
Set Sweep = auto couple.
Allow the trace to stabilize.
Measure the maximum width of the emission that is constrained by the frequencies associated with the two outermost amplitude points (upper and lower frequencies) that are attenuated by 6 dB relative to the maximum level measured in the fundamental emission.
Measure and record the results in the test report.

8.1.5 Test Results

Temperature:	25˚C
Relative Humidity:	45%
ATM Pressure:	1011 mbar

Note: N/A

TestMode	Antenna	Frequency[MHz]	DTS BW [MHz]	FL[MHz]	FH[MHz]	Limit[MHz]	Verdict
11B	Ant1	2412	9.560	2406.960	2416.520	0.5	PASS
11B	Ant1	2437	8.600	2432.440	2441.040	0.5	PASS
11B	Ant1	2462	10.040	2456.960	2467.000	0.5	PASS
11G	Ant1	2412	16.320	2403.840	2420.160	0.5	PASS
11G	Ant1	2437	16.280	2428.840	2445.120	0.5	PASS
11G	Ant1	2462	16.280	2453.840	2470.120	0.5	PASS
11N20SISO	Ant1	2412	16.880	2403.600	2420.480	0.5	PASS
11N20SISO	Ant1	2437	17.600	2428.200	2445.800	0.5	PASS
11N20SISO	Ant1	2462	17.120	2453.640	2470.760	0.5	PASS
11N40SISO	Ant1	2422	34.480	2404.400	2438.880	0.5	PASS
11N40SISO	Ant1	2437	35.040	2419.480	2454.520	0.5	PASS
11N40SISO	Ant1	2452	35.040	2434.480	2469.520	0.5	PASS

11B-Ant1-2412-PASS

11B-Ant1-2437-PASS

11B-Ant1-2462-PASS

11G-Ant1-2412-PASS

11G-Ant1-2437-PASS

11G-Ant1-2462-PASS

11N20SISO-Ant1-2412-PASS

11N20SISO-Ant1-2437-PASS

11N20SISO-Ant1-2462-PASS

11N40SISO-Ant1-2422-PASS

11N40SISO-Ant1-2437-PASS

11N40SISO-Ant1-2452-PASS

8.2 DTS 99% BANDWIDTH

8.2.1 Applicable Standard

According to RSS-Gen 6.7 and KDB 558074 D01 DTS Meas Guidance v05r02

8.2.2 Test Configuration

Test according to clause 7.1 radio frequency test setup 1

8.2.3 Test Procedure

The EUT was operating in Bluetooth mode and controlled its channel. Printed out the test result from the spectrum by hard copy function.
The RF output of EUT was connected to the spectrum analyzer by RF cable and attenuator. The path loss was compensated to the results for each measurement.
Set to the maximum power setting and enable the EUT transmit continuously
Set RBW = 1%-5% OBW.
Set the video bandwidth (VBW) ≥3*RBW.
Set Span=approximately 2 to 3 times the 20 dB bandwidth.
Set Detector = AVG.
Set Trace mode = max hold.
Set Sweep = auto couple.
Allow the trace to stabilize.
Use the 99 % power bandwidth function of the instrument
Measure the maximum width of the emission.
If this value varies with different modes of operation (e.g., data rate, modulation format, etc.), repeat this test for each variation .
Measure and record the results in the test report.

8.2.4 Test Results

Temperature:	25˚C
Relative Humidity:	45%
ATM Pressure:	1011 mbar

Note: N/A

TestMode	Antenna	Channel Frequency[MHz]	OCB [MHz]	FL[MHz]	FH[MHz]	Limit[MHz]	Verdict
11B	Ant1	2412	14.993	2404.5476	2419.5406	---	---
11B	Ant1	2437	14.957	2429.5271	2444.4841	---	---
11B	Ant1	2462	14.930	2454.5639	2469.4939	---	---
11G	Ant1	2412	17.273	2403.3959	2420.6689	---	---
11G	Ant1	2437	17.420	2428.3000	2445.7200	---	---
11G	Ant1	2462	17.430	2453.3748	2470.8048	---	---
11N20SISO	Ant1	2412	18.325	2402.8426	2421.1676	---	---
11N20SISO	Ant1	2437	18.405	2427.8292	2446.2342	---	---
11N20SISO	Ant1	2462	18.217	2452.9510	2471.1680	---	---
11N40SISO	Ant1	2422	36.114	2403.9671	2440.0811	---	---
11N40SISO	Ant1	2437	36.180	2418.9171	2455.0971	---	---
11N40SISO	Ant1	2452	36.007	2433.9835	2469.9905	---	---

11B-Ant1-2412

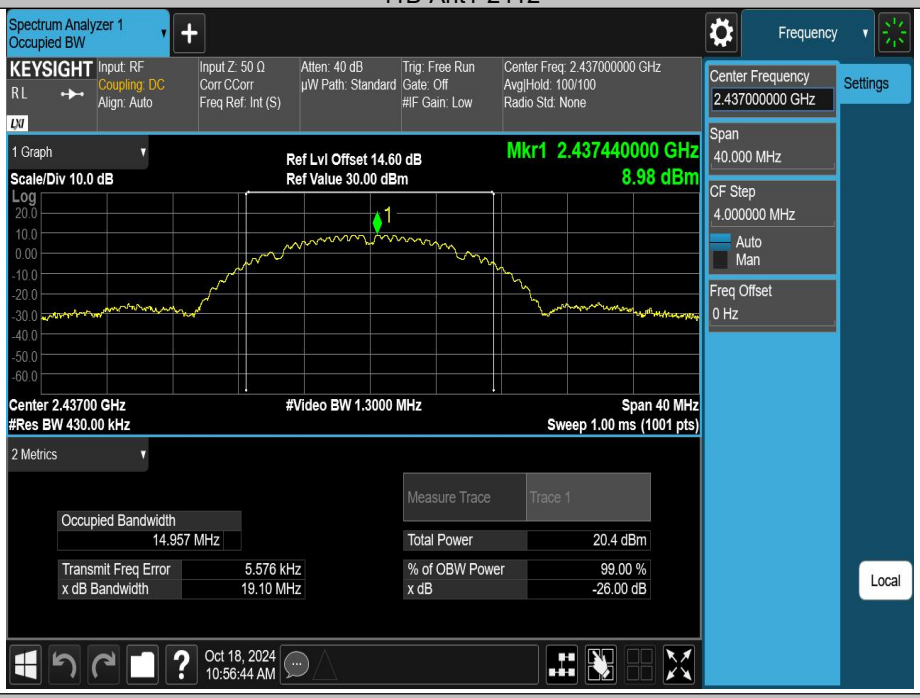

11B-Ant1-2437

11B-Ant1-2462

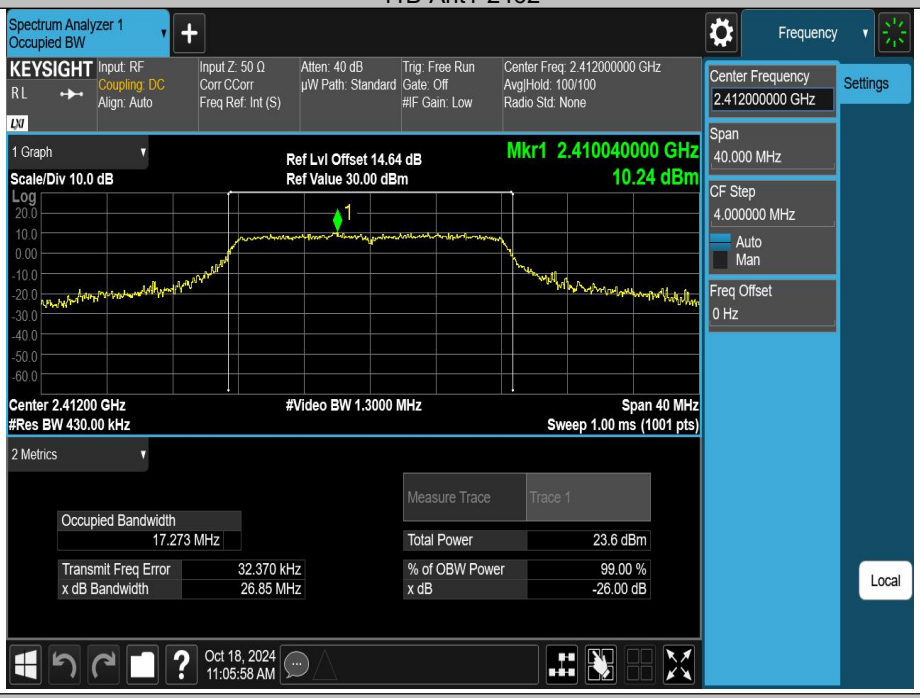

11G-Ant1-2412

11G-Ant1-2437

11G-Ant1-2462

11N20SISO-Ant1-2412

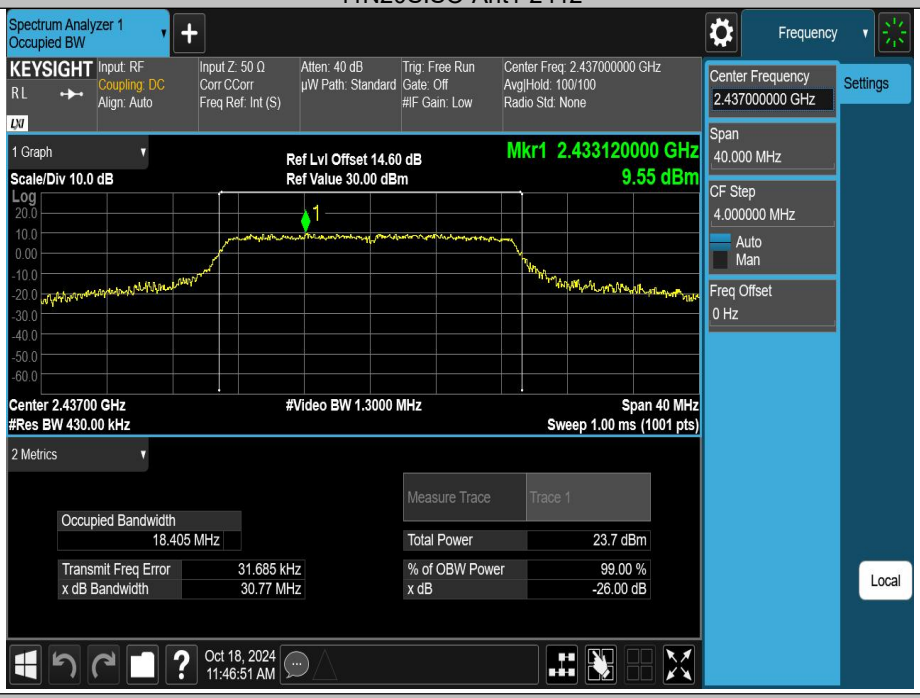

11N20SISO-Ant1-2437

11N20SISO-Ant1-2462

11N40SISO-Ant1-2422

11N40SISO-Ant1-2437

11N40SISO-Ant1-2452

8.3 MAXIMUM PEAK CONDUCTED OUTPUT POWER

8.3.1 Applicable Standard

According to FCC Part15.247 (b)(3) and KDB 558074 D01 15.247 Meas Guidance v05r02
According to RSS-247 5.4(d) and RSS-Gen 6.12

8.3.2 Conformance Limit

The maximum conducted output power of the intentional radiator for systems using digital modulation in the 2400 - 2483.5 MHz bands shall not exceed: 1 Watt (30dBm).

8.3.3 Test Configuration

Test according to clause 6.1 radio frequency test setup

8.3.4 Test Procedure

a) Set span to at least 1.5 times the OBW.
b) Set RBW = 1-5% of the OBW, not to exceed 1 MHz.
c) Set VBW ≥ 3 x RBW.
d) Number of points in sweep ≥ 2 × span / RBW. (This gives bin-to-bin spacing ≤ RBW/2, so that narrowband signals are not lost between frequency bins.)
e) Sweep time = auto.
f) Detector = RMS (i.e., power averaging), if available. Otherwise, use sample detector mode.
g) If transmit duty cycle < 98 %, use a sweep trigger with the level set to enable triggering only on full power pulses. The transmitter shall operate at maximum power control level for the entire duration of every sweep. If the EUT transmits continuously (i.e., with no off intervals) or at duty cycle ≥ 98 %, and if each transmission is entirely at the maximum power control level, then the trigger shall be set to "free run".
h) Trace average at least 100 traces in power averaging (i.e., RMS) mode.
i) Compute power by integrating the spectrum across the OBW of the signal using the instrument's band power measurement function, with band limits set equal to the OBW band edges. If the instrument does not have a band power function, sum the spectrum levels (in power units) at intervals equal to the RBW extending across the entire OBW of the spectrum.

■ According to FCC Part 15.247(b)(4):
Conducted output power limit specified in paragraph (b) of this section is based on the use of antennas with directional gains that do not exceed 6 dBi. If transmitting antennas of directional gain greater than 6 dBi are used, the conducted output power from the intentional radiator shall be reduced below the stated values in paragraphs (b)(3) of this section, as appropriate, by the amount in dB that the directional gain of the antenna exceeds 6 dBi.
Note: If antenna Gain exceeds 6 dBi, then Output power Limit=30-(Gain- 6)

8.3.5 Test Results

Temperature:	25 ˚C
Relative Humidity:	45%
ATM Pressure:	1011 mbar

Note: N/A

Test Mode	Antenna	Frequency[MHz]	Result [dBm]	Limit [dBm]	Gain [dBi]	EIRP [dBm]	EIRP Limit [dBm]	Verdict
11B	Ant1	2412	17.30	≤30.00	2.66	19.96	≤36.00	PASS
11B	Ant1	2437	16.23	≤30.00	2.66	18.89	≤36.00	PASS
11B	Ant1	2462	17.75	≤30.00	2.66	20.41	≤36.00	PASS
11G	Ant1	2412	17.54	≤30.00	2.66	20.20	≤36.00	PASS
11G	Ant1	2437	16.68	≤30.00	2.66	19.34	≤36.00	PASS
11G	Ant1	2462	18.03	≤30.00	2.66	20.69	≤36.00	PASS
11N20SISO	Ant1	2412	17.40	≤30.00	2.66	20.06	≤36.00	PASS
11N20SISO	Ant1	2437	16.29	≤30.00	2.66	18.95	≤36.00	PASS
11N20SISO	Ant1	2462	17.98	≤30.00	2.66	20.64	≤36.00	PASS
11N40SISO	Ant1	2422	17.65	≤30.00	2.66	20.31	≤36.00	PASS
11N40SISO	Ant1	2437	17.34	≤30.00	2.66	20.00	≤36.00	PASS
11N40SISO	Ant1	2452	18.02	≤30.00	2.66	20.68	≤36.00	PASS

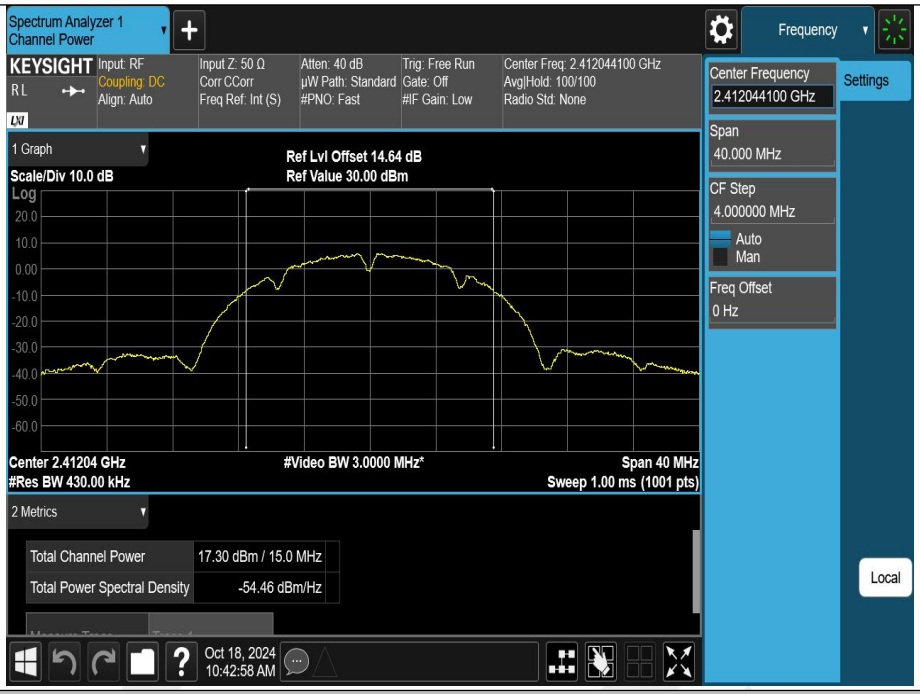

11B-Ant1-2412-PASS

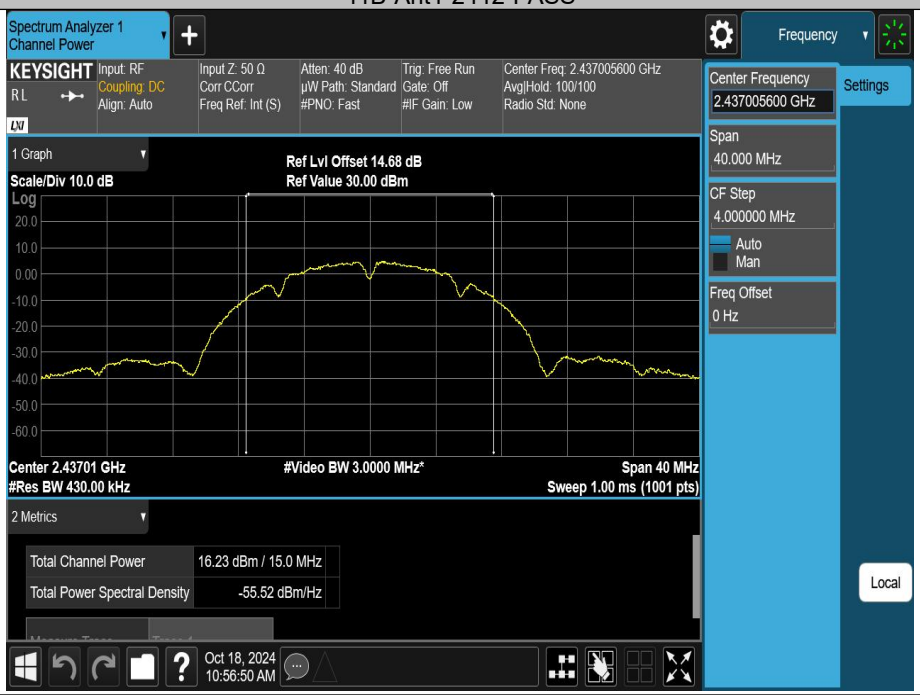

11B-Ant1-2437-PASS

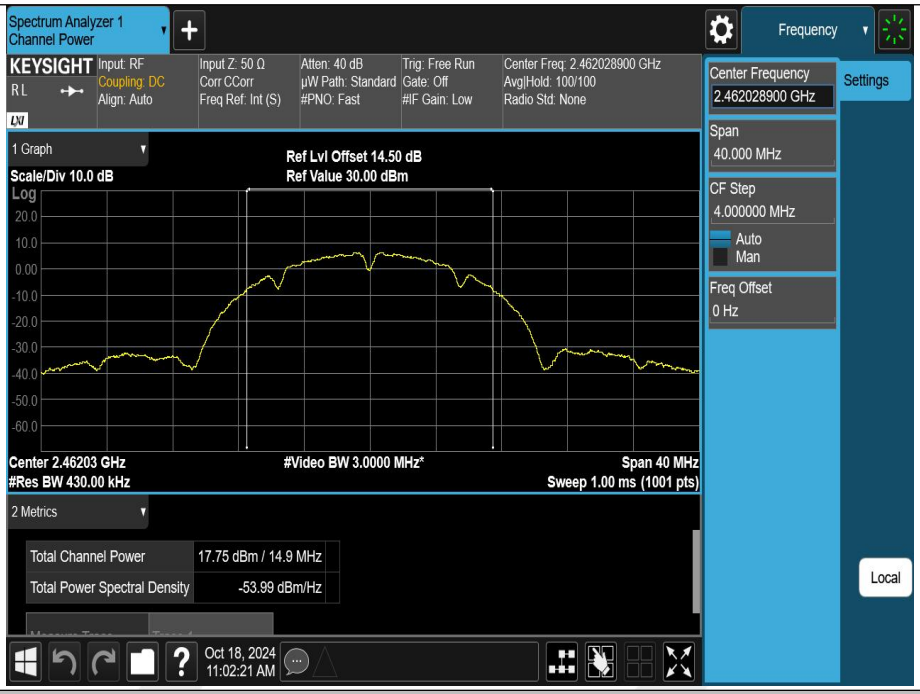

11B-Ant1-2462-PASS

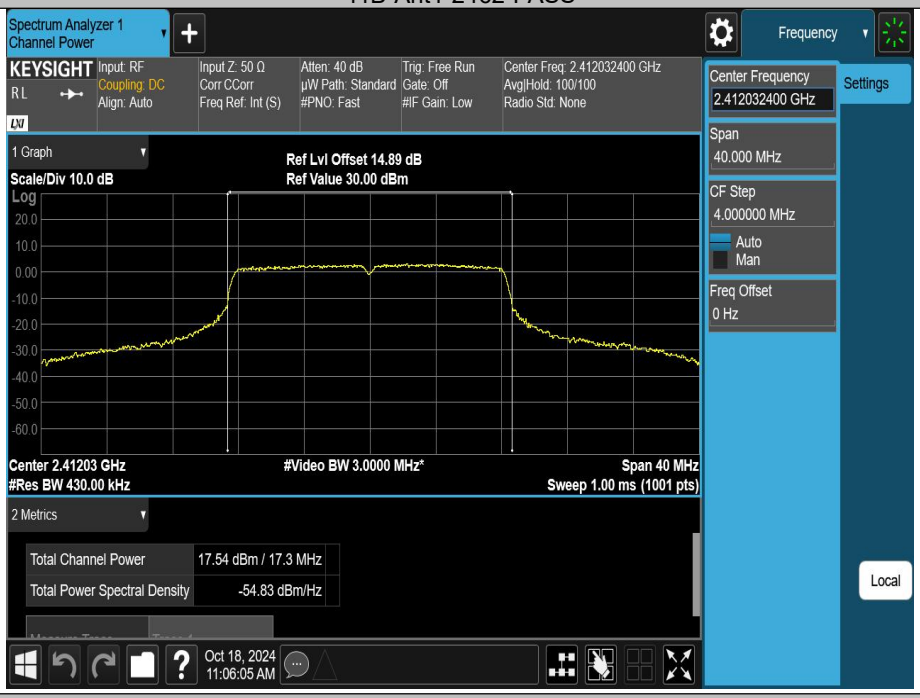

11G-Ant1-2412-PASS

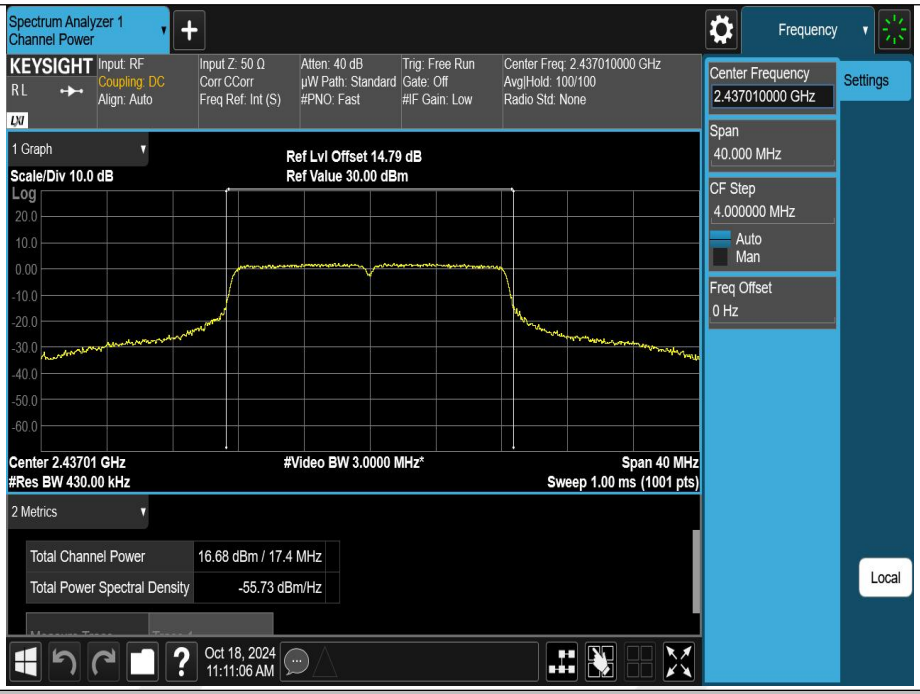

11G-Ant1-2437-PASS

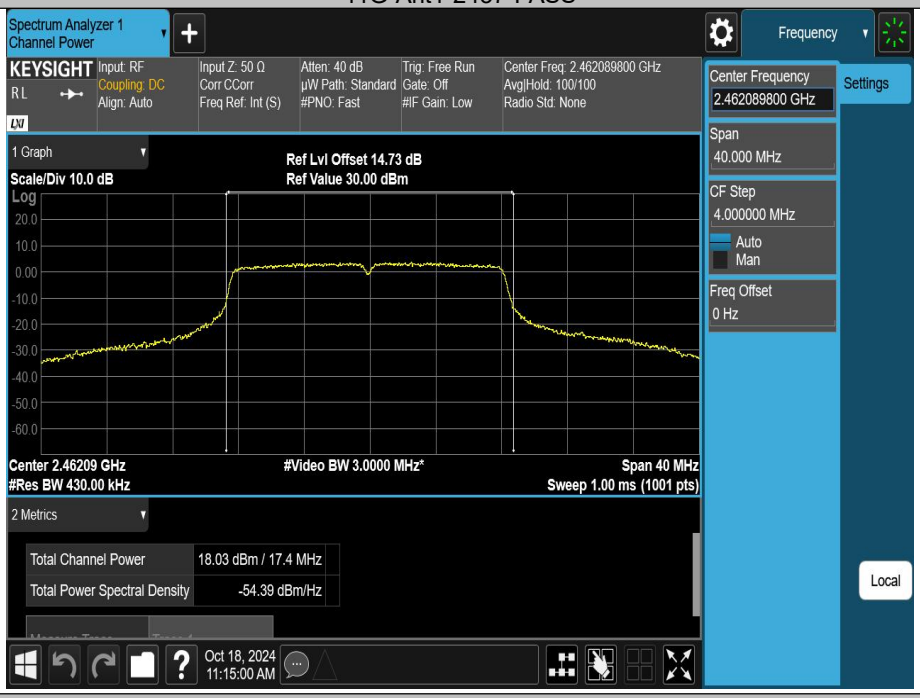

11G-Ant1-2462-PASS

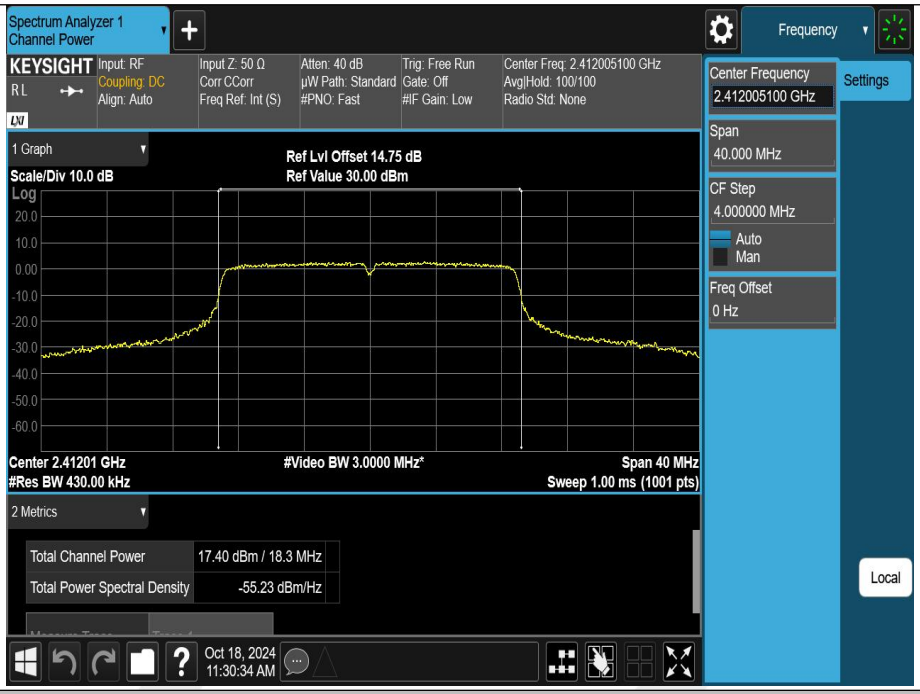

11N20SISO-Ant1-2412-PASS

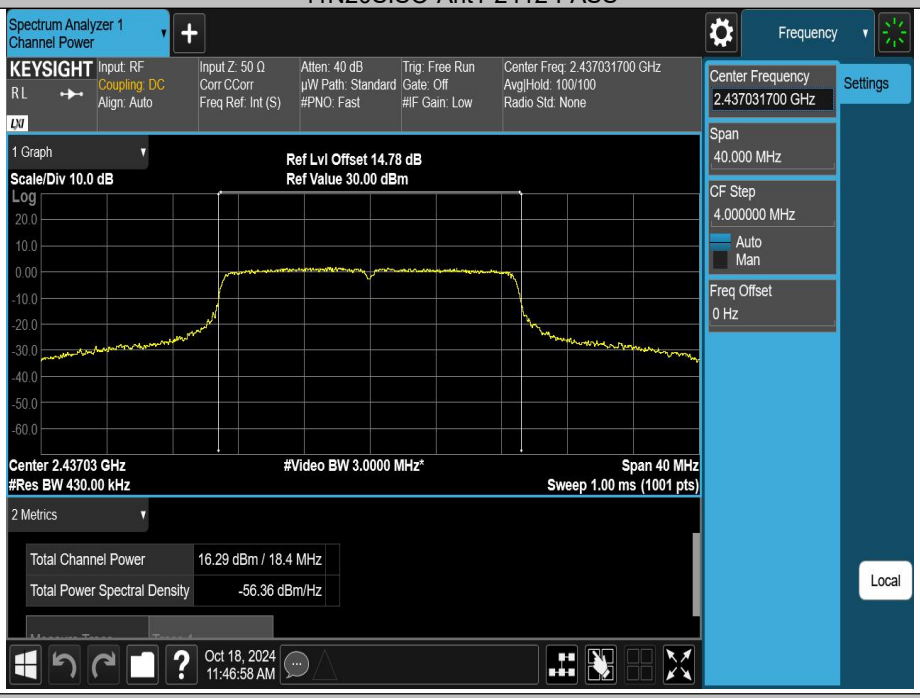

11N20SISO-Ant1-2437-PASS