TEST REPORT

Report No.:	BCTC2401588466E
Applicant:	SANBRITE PTY LTD
Product Name:	Remote
Test Model:	CD-CB8X
Tested Date:	2024-01-09 to 2024-01-11
Issued Date:	2024-01-11

Shenzhen BCTC Testing Co., Ltd.

FCC ID:2BEO8CD-CB8X

Product Name:	Remote
Trademark:	N/A
Model/Type Reference:	CD-CB8X CD-CB4X, CD-CB6X
Prepared For:	SANBRITE PTY LTD
Address:	UNIT 1, 32 ANTHONY DR MOUNT WAVERLEY, VIC 3149 AUSTRALIA
Manufacturer:	Shenzhen Chenda zhike electronics co., ltd
Address:	Room 1011A15, Building A, Xinghe Century, No.3069 Caitian Road, Gangxia Community, Futian District, Shenzhen, China
Prepared By:	Shenzhen BCTC Testing Co., Ltd.
Address:	1-2/F., Building B, Pengzhou Industrial Park, No.158, Fuyuan 1st Road, Zhancheng, Fuhai Subdistrict, Bao'an District, Shenzhen, Guangdong, China
Sample Received Date:	2024-01-09
Sample Tested Date:	2024-01-09 to 2024-01-11
Issue Date:	2024-01-11
Report No.:	BCTC2401588466E
Test Standards:	FCC Part15.231 ANSI C63.10-2013
Test Results:	PASS

Tested by:

Kelsey Tan/ Project Handler

Approved by:

Zero Zhou/Reviewer

The test report is effective only with both signature and specialized stamp. This result(s) shown in this report refer only to the sample(s) tested. Without written approval of Shenzhen BCTC Testing Co., Ltd, this report can't be reproduced except in full. The tested sample(s) and the sample information are provided by the client.

Table Of Content

Test Report Declaration Page
1. Version 4
2. Test Summary 5
3. Measurement Uncertainty 6
4. Product Information And Test Setup 7
4.1 Product Information 7
4.2 Test Setup Configuration 7
4.3 Support Equipment 8
4.4 Channel List 8
4.5 Test Mode 8
5. Test Facility And Test Instrument Used 9
5.1 Test Facility 9
5.2 Test Instrument Used 9
6. Conducted Emissions 10
6.1 Block Diagram Of Test Setup 10
6.2 Limit 10
6.3 Test Procedure 10
6.4 EUT Operating Conditions 10
6.5 Test Result 10
7. Radiated Emissions 11
7.1 Block Diagram Of Test Setup 11
7.2 Limit 12
7.3 Test Procedure 13
7.4 EUT Operating Conditions 14
7.5 Test Result 15
8. Bandwidth Test 19
8.1 Block Diagram Of Test Setup 19
8.2 Limit 19
8.3 Test Procedure 19
8.4 EUT Operating Conditions 19
8.5 Test Result 20
9. Calculation Of Average Factor 21
10. Dwell Time 24
10.1 Block Diagram Of Test Setup 24
10.2 Limit 24
10.3 Test Procedure 24
10.4 Test Result 25
11. Antenna Requirement 26
11.1 Standard Requirement 26
11.2 EUT Antenna 26
12. EUT Photographs 27
13. EUT Test Setup Photographs 28

(Note: N/A Means Not Applicable)

1. Version

Report No.	Issue Date	Description	Approved
BCTC2401588466E	2024-01-11	Original	Valid

2. Test Summary

The Product has been tested according to the following specifications:

No.	Test Parameter	Clause No.	Results
1	Conducted Emission	§15.207	N/A*
2	Fundamental &Radiated Spurious Emission Measurement	15.209,15.231b	PASS
3	Occupy Bandwidth	15.231c	PASS
4	Dwell time	15.231a	PASS
5	Antenna Requirement	15.203	PASS

Note*: The EUT is powered by the DC only, the test item is not applicable.

3. Measurement Uncertainty

Where relevant, the following measurement uncertainty levels have been estimated for tests performed on the Product as specified in CISPR 16-4-2. This uncertainty represents an expanded uncertainty expressed at approximately the 95% confidence level using a coverage factor of k=2.

No.	Item	Uncertainty
1	3m chamber Radiated spurious emission(9kHz-30MHz)	U=3.7dB
2	3m chamber Radiated spurious emission(30MHz-1GHz)	U=4.3dB
3	3m chamber Radiated spurious emission(1GHz-18GHz)	U=4.5dB
4	3m chamber Radiated spurious emission(18GHz-40GHz)	U=3.34dB
5	Conducted Emission(150kHz-30MHz)	U=3.20dB
6	Conducted Adjacent channel power	U=1.38dB
7	Conducted output power uncertainty Above 1G	U=1.576dB
8	Conducted output power uncertainty below 1G	U=1.28dB
9	humidity uncertainty	U=5.3%
10	Temperature uncertainty	U=0.59℃

4. Product Information And Test Setup

4.1 Product Information

Model/Type Reference:	CD-CB8X CD-CB4X, CD-CB6X
Model Differences:	All the model are the same circuit and RF module, except model names and appearance of the color.
Operation Frequency:	433.92 MHz
Type of Modulation:	ASK
Number Of Channel	1CH
Antenna installation:	Internal antenna
Antenna Gain:	0 dBi
Ratings:	DC 3V
Remark:	The antenna gain of the product comes from the antenna report provided by the customer, and the test data is affected by the customer information.

4.2 Test Setup Configuration

See test photographs attached in *EUT TEST SETUP PHOTOGRAPHS* for the actual connections between Product and support equipment.

Radiated Spurious Emission:

E-1 EUT

4.3 Support Equipment

Item	Shielded Type	Ferrite Core	Length	Note
E-1	Remote	N/A	CD-CB8X	N/A

Notes:
1. All the equipment/cables were placed in the worst-case configuration to maximize the emission during the test.
2. Grounding was established in accordance with the manufacturer's requirements and conditions for the intended use.

4.4 Channel List

CH	Frequency (MHz)
1	433.92

4.5 Test Mode

To investigate the maximum EMI emission characteristics generates from EUT, the test system was pre-scanning tested base on the consideration of following EUT operation mode or test configuration mode which possible have effect on EMI emission level. Each of these EUT operation mode(s) or test configuration mode(s) mentioned above was evaluated respectively.

Final Test Mode	Description
Mode 1	TX

Note:
(1) The measurements are performed at the highest, middle, lowest available channels.
(2) Fully-charged battery is used during the test

5. Test Facility And Test Instrument Used

5.1 Test Facility

All measurement facilities used to collect the measurement data are located at Shenzhen BCTC Testing Co., Ltd. Address: 1-2/F., Building B, Pengzhou Industrial Park, No.158, Fuyuan 1st Road, Zhancheng, Fuhai Subdistrict, Bao'an District, Shenzhen, Guangdong, China. The site and apparatus are constructed in conformance with the requirements of ANSI C63.4 and CISPR 16-1-1 other equivalent standards.
FCC Test Firm Registration Number: 712850
A2LA certificate registration number is: CN1212
ISED Registered No.: 23583
ISED CAB identifier: CN0017

5.2 Test Instrument Used

RF Conducted Test					
Equipment	**Manufacturer**	**Model#**	**Serial#**	**Last Cal.**	**Next Cal.**
Power Metter	Keysight	E4419	\	May 15, 2023	May 14, 2024
Power Sensor (AV)	Keysight	E9300A	\	May 15, 2023	May 14, 2024
Signal Analyzer20kHz-26.5GHz	Keysight	N9020A	MY49100060	May 15, 2023	May 14, 2024
Spectrum Analyzer9kHz-40GHz	R&S	FSP40	100363	May 15, 2023	May 14, 2024

Radiated Emissions Test (966 Chamber01)					
Equipment	**Manufacturer**	**Model#**	**Serial#**	**Last Cal.**	**Next Cal.**
966 chamber	ChengYu	966 Room	966	May 15, 2023	May 14, 2026
Receiver	R&S	ESR3	102075	May 15, 2023	May 14, 2024
Receiver	R&S	ESRP	101154	May 15, 2023	May 14, 2024
Amplifier	Schwarzbeck	BBV9744	9744-0037	May 15, 2023	May 14, 2024
TRILOG Broadband Antenna	Schwarzbeck	VULB9163	942	May 29, 2023	May 28, 2024
Loop Antenna(9KHz-30MHz)	Schwarzbeck	FMZB1519B	00014	May 31, 2023	May 30, 2024
Amplifier	SKET	LAPA_01G18G-45dB	\	May 15, 2023	May 14, 2024
Horn Antenna	Schwarzbeck	BBHA9120D	1541	May 31, 2023	May 30, 2024
Amplifier(18GHz-40GHz)	MITEQ	TTA1840-35-HG	2034381	May 15, 2023	May 14, 2024
Horn Antenna(18GHz-40GHz)	Schwarzbeck	BBHA9170	00822	May 31, 2023	May 30, 2024
Spectrum Analyzer9kHz-40GHz	R&S	FSP40	100363	May 15, 2023	May 14, 2024
Software	Frad	EZ-EMC	FA-03A2 RE	\	\

6. Conducted Emissions

6.1 Block Diagram Of Test Setup

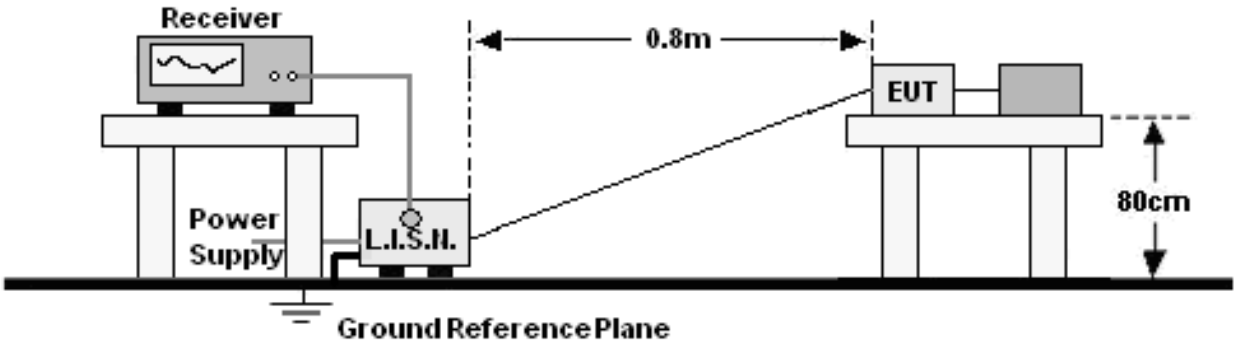

6.2 Limit

Frequency (MHz)	Limit (dBuV)	
	Quas-peak	Average
0.15 -0.5	66 - 56 *	56 - 46 *
0.50 -5.0	56.00	46.00
5.0 -30.0	60.00	50.00

Notes:
1. *Decreasing linearly with logarithm of frequency.
2. The lower limit shall apply at the transition frequencies.

6.3 Test Procedure

Receiver Parameters	Setting
Attenuation	10 dB
Start Frequency	0.15 MHz
Stop Frequency	30 MHz
IF Bandwidth	9 kHz

a. The Product was placed on a nonconductive table 0.8 m above the horizontal ground reference plane, and 0.4 m from the vertical ground reference plane, and connected to the main through Line Impedance Stability Network (L.I.S.N).
b. The RBW of the receiver was set at 9 kHz in 150 kHz ~ 30MHz with Peak and AVG detector in Max Hold mode. Run the receiver's pre-scan to record the maximum disturbance generated from Product in all power lines in the full band.
c. For each frequency whose maximum record was higher or close to limit, measure its QP and AVG values and record.

6.4 EUT Operating Conditions

The EUT was configured for testing in a typical fashion (as a customer would normally use it). The EUT has been programmed to continuously transmit during test. This operating condition was tested and used to collect the included data.

6.5 Test Result

The EUT is powered by the DC only, the test item is not applicable.

7. Radiated Emissions

7.1 Block Diagram Of Test Setup

（A）Radiated Emission Test-Up Frequency Below 30MHz

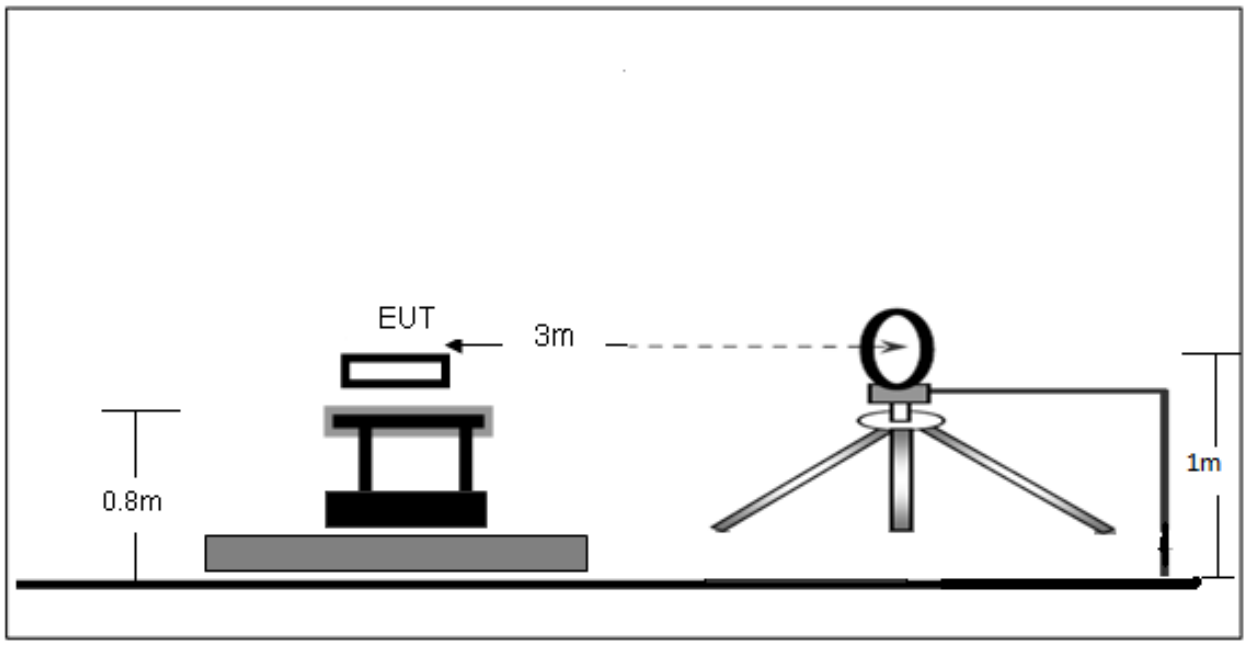

（B）Radiated Emission Test-Up Frequency 30MHz~1GHz

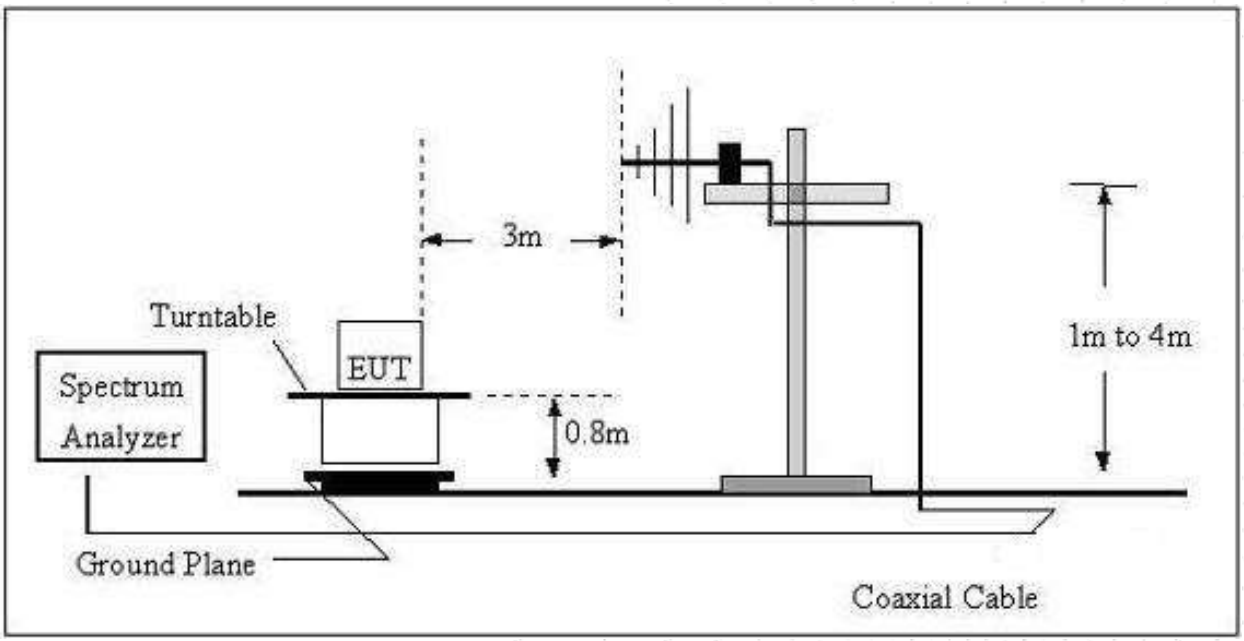

（C）Radiated Emission Test-Up Frequency Above 1GHz

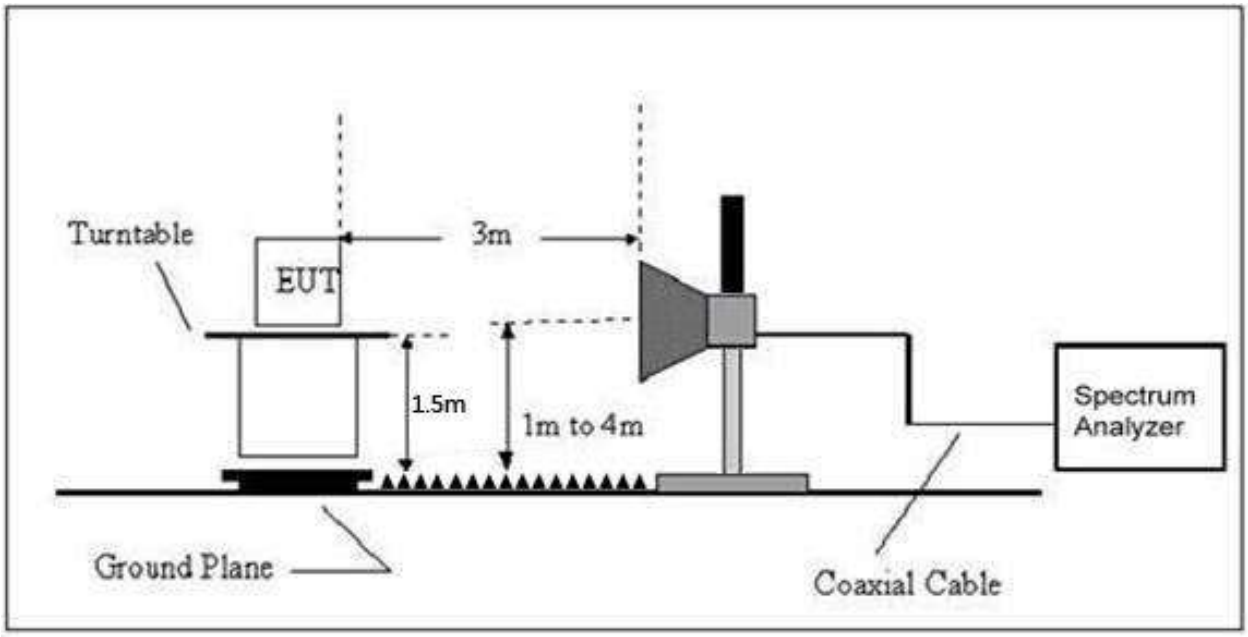

7.2 Limit

20dBc in any 100 kHz bandwidth outside the operating frequency band. In case the emission fall within the restricted band specified on 15.205(a), then the 15.209(a) limit in the table below has to be followed.

Frequency	Field Strength	Distance	Field Strength Limit at 3m Distance	
(MHz)	uV/m	(m)	uV/m	dBuV/m
0.009 ~ 0.490	2400/F(kHz)	300	10000 * 2400/F(kHz)	$20\log^{(2400/F(kHz))} + 80$
0.490 ~ 1.705	24000/F(kHz)	30	100 * 24000/F(kHz)	$20\log^{(24000/F(kHz))} + 40$
1.705 ~ 30	30	30	100 * 30	$20\log^{(30)} + 40$
30 ~ 88	100	3	100	$20\log^{(100)}$
88 ~ 216	150	3	150	$20\log^{(150)}$
216 ~ 960	200	3	200	$20\log^{(200)}$
Above 960	500	3	500	$20\log^{(500)}$

Field Strength of Fundamental Limit:

Fundamental and harmonics emission limits Frequency(MHz)	Field strength of Fundamental ((microvolts/meter)	Field strength of spurious Emissions (microvolts/meter)
40.66-40.70	2250	225
70-130	1250	125
130-174	1250 to 3750**	125 to 375**
174-260	3750	375
260-470	3750 to 12500**	375 to 1250**
Above 470	12500	1250

** linear interpolations
[Where F is the frequency in MHz, the formulas for calculating the maximum permitted fundamental field strengths are as follows: for the band 130-174 MHz, μV/m at 3 meters = 56.81818(F) - 6136.3636; for the band 260-470 MHz, μV/m at 3 meters = 41.6667(F) - 7083.3333. The maximum permitted unwanted emission level is 20 dB below the maximum permitted fundamental level.]

Frequency (MHz)	Limit (dBuV/m) (at 3M)	
	Peak	Average
433.92	100.8	80.8

Limits Of Radiated Emission Measurement (Above 1000mhz)

Frequency (MHz)	Limit (dBuV/m) (at 3M)	
	Peak	Average
Above 1000	74	54

Notes:
(1)The limit for radiated test was performed according to FCC PART 15C.
(2)The tighter limit applies at the band edges.
(3) Emission level (dBuV/m)=20log Emission level (uV/m).

Frequency Range Of Radiated Measurement (For unintentional radiators)

Highest frequency generated or Upper frequency of measurement used in the device or on which the device operates or tunes (MHz)	Range (MHz)
Below 1.705	30
1.705 – 108	1000
108 – 500	2000
500 – 1000	5000
Above 1000	5th harmonic of the highest frequency or 40 GHz, whichever is lower

7.3 Test Procedure

Receiver Parameter	Setting
Attenuation	Auto
9kHz~150kHz	RBW 200Hz for QP
150kHz~30MHz	RBW 9kHz for QP
30MHz~1000MHz	RBW 120kHz for QP

Spectrum Parameter	Setting
1-6GHz	RBW 1 MHz /VBW 1 MHz for Peak, RBW 1 MHz / VBW 10Hz for Average

Below 1GHz test procedure as below:
a. The EUT was placed on the top of a rotating table 0.8 meters above the ground at a 3 meter semi-anechoic chamber. The table was rotated 360 degrees to determine the position of the highest radiation.
b. The EUT was set 3 meters away from the interference-receiving antenna, which was mounted on the top of a variable-height antenna tower.
c. The antenna height is varied from one meter to four meters above the ground to determine the maximum value of the field strength. Both horizontal and vertical polarizations of the antenna are set to make the measurement.
d. For each suspected emission, the EUT was arranged to its worst case and then the antenna was tuned to heights from 1 meter to 4 meters (for the test frequency of below 30MHz, the antenna was tuned to heights 1 meter) and the rotatable table was turned from 0 degrees to 360 degrees to find the maximum reading.
e. The test-receiver system was set to Peak Detect Function and Specified Bandwidth with Maximum Hold Mode.
f. If the emission level of the EUT in peak mode was 10dB lower than the limit specified, then testing could be stopped and the peak values of the EUT would be reported. Otherwise the emissions that did not have 10dB margin would be re-tested one by one using peak, quasi-peak or average method as specified and then reported in a data sheet.
Above 1GHz test procedure as below:
g. Different between above is the test site, change from Semi- Anechoic Chamber to fully Anechoic Chamber and change form table 0.8 metre to 1.5 metre(Above 18GHz the distance is 1 meter and table is 1.5 metre).
h. Test the EUT in the lowest channel, the middle channel ,the Highest channel.

Note:
Both horizontal and vertical antenna polarities were tested and performed pretest to three orthogonal axis. The worst case emissions were reported.

Above 1GHz test procedure as below:
a. The EUT was placed on the top of a rotating table 1.5 meters above the ground at a 3 meter chamber. The table was rotated 360 degrees to determine the position of the highest radiation.
b. The EUT was set 3 meters away from the interference-receiving antenna, which was mounted on the top of a variable-height antenna tower.
c. The antenna height is varied from one meter to four meters above the ground to determine the maximum value of the field strength. Both horizontal and vertical polarizations of the antenna are set to make the measurement.
d. For each suspected emission, the EUT was arranged to its worst case and then the antenna was tuned to heights from 1 meter to 4 meters and the rota table was turned from 0 degrees to 360 degrees to find the maximum reading.
e. The test-receiver system was set to Peak Detect Function and Specified Bandwidth with Maximum Hold Mode.
f. If the emission level of the EUT in peak mode was 10dB lower than the limit specified, then testing could be stopped and the peak values of the EUT would be reported. Otherwise the emissions that did not have 10dB margin would be re-tested one by one using peak, quasi-peak or average method as specified and then reported in a data sheet.
g. Test the EUT in the lowest channel, the Highest channel.
Note: Both horizontal and vertical antenna polarities were tested and performed pretest to three orthogonal axis. The worst case emissions were reported.

7.4 EUT Operating Conditions

The EUT was configured for testing in a typical fashion (as a customer would normally use it). The EUT has been programmed to continuously transmit during test. This operating condition was tested and used to collect the included data.

7.5 Test Result

Below 30MHz

Temperature:	26℃	Relative Humidity:	24%
Pressure:	101 kPa	Test Voltage:	DC 3V
Test Mode:	Mode 1		

Freq.	Reading	Limit	Margin	State
(MHz)	(dBuV/m)	(dBuV/m)	(dB)	P/F
--	--	--	--	PASS
--	--	--	--	PASS

Note:
The amplitude of spurious emissions which are attenuated by more than 20dB below the permissible value has no need to be reported.
Distance extrapolation factor =40 log (specific distance/test distance)(dB);
Limit line = specific limits(dBuv) + distance extrapolation factor.

Between 30MHz – 1GHz

Temperature:	26 ℃	Relative Humidity:	54%
Pressure:	101kPa	Phase :	Horizontal
Test Voltage :	DC 3V	Test Mode:	Mode 1

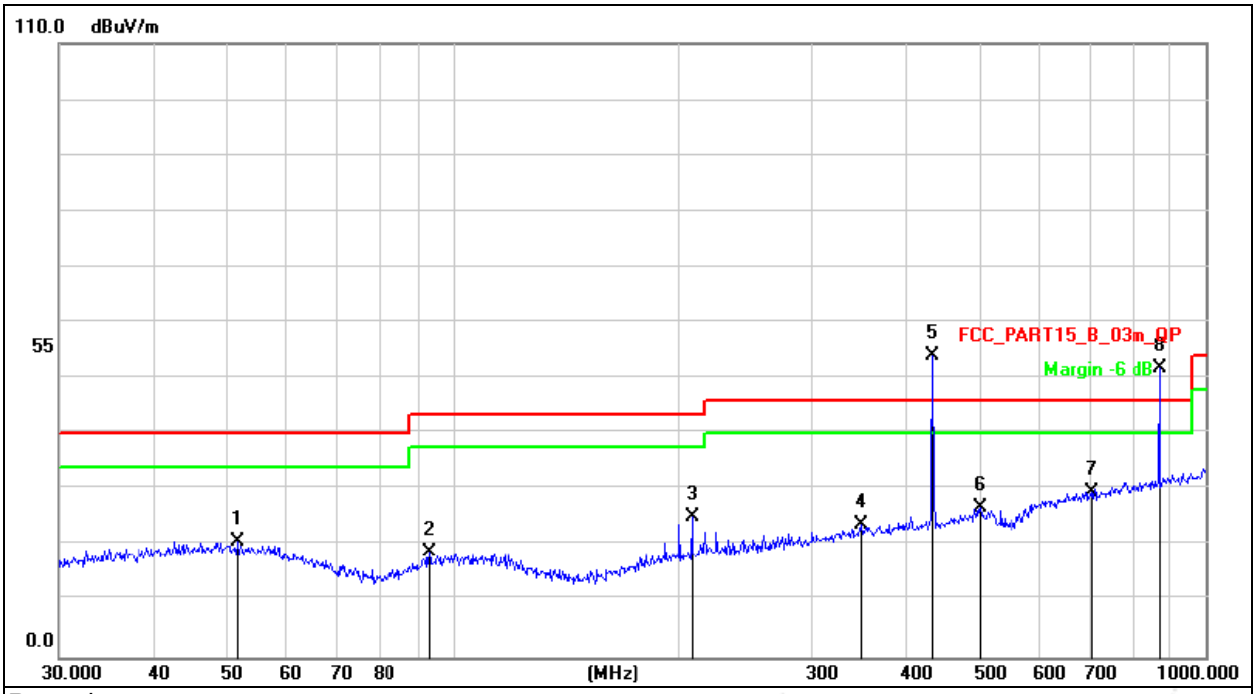

Remark:
1. Factor = Antenna Factor + Cable Loss – Pre-amplifier.
2. Measurement=Reading Level+ Correct Factor
3. Over= Measurement-Limit

No.	Mk.	Freq.	Reading Level	Correct Factor	Measure-ment	Limit	Over	Ar H
		MHz	dBuV	dB	dBuV/m	dB/m	dB	Detector
1		51.6615	34.99	-14.12	20.87	40.00	-19.13	QP
2		93.1132	35.69	-16.94	18.75	43.50	-24.75	QP
3		207.8500	40.72	-15.50	25.22	43.50	-18.28	QP
4		348.0274	35.26	-11.55	23.71	46.00	-22.29	QP
5	*	434.0651	64.32	-10.17	54.15	100.83	-46.68	peak
6		501.1788	35.39	-8.65	26.74	46.00	-19.26	QP
7		704.2260	35.30	-5.65	29.65	46.00	-16.35	QP
8	X	869.1302	55.40	-3.65	51.75	80.83	-29.08	peak

Temperature:	26 ℃	Relative Humidity:	54%
Pressure:	101kPa	Phase :	Vertical
Test Voltage :	DC 3V	Test Mode:	Mode 1

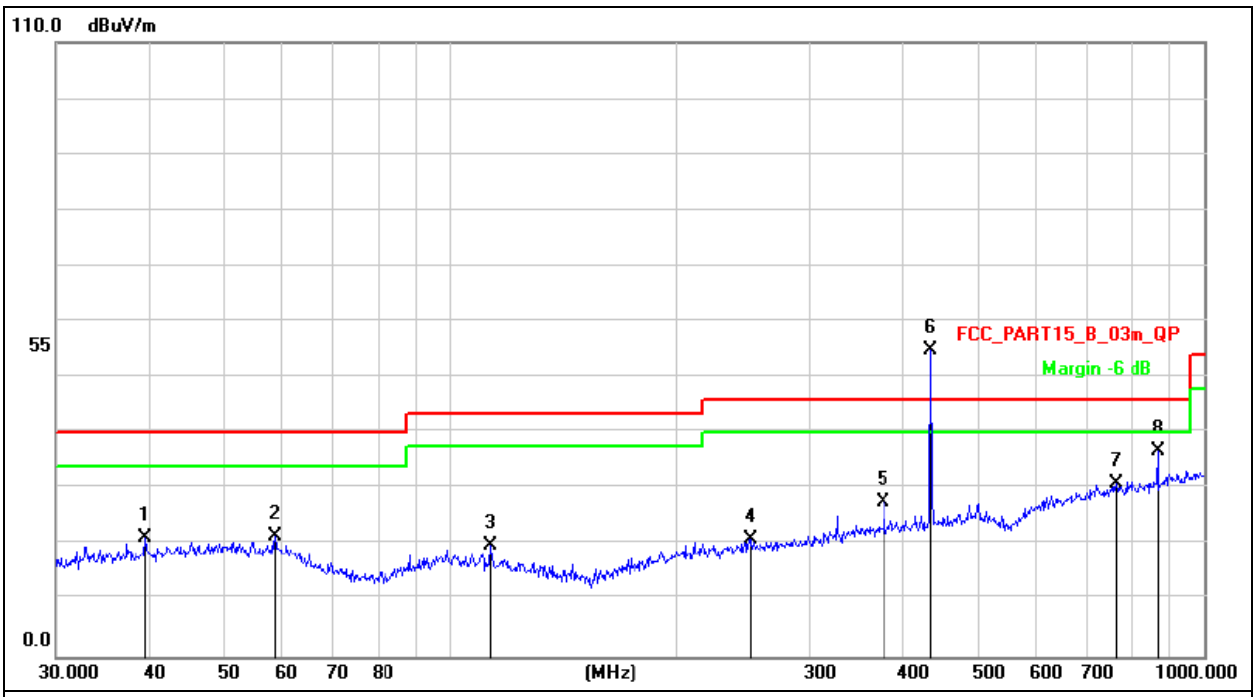

Remark:
1. Factor = Antenna Factor + Cable Loss – Pre-amplifier.
2. Measurement=Reading Level+ Correct Factor
3. Over= Measurement-Limit

No.	Mk.	Freq.	Reading Level	Correct Factor	Measure-ment	Limit	Over	A H
		MHz	dBuV	dB	dBuV/m	dB/m	dB	Detector
1		39.4371	36.02	-14.83	21.19	40.00	-18.81	QP
2		58.6126	36.59	-15.06	21.53	40.00	-18.47	QP
3		112.9196	36.84	-16.83	20.01	43.50	-23.49	QP
4		250.3011	35.42	-14.28	21.14	46.00	-24.86	QP
5		375.9384	38.81	-11.15	27.66	46.00	-18.34	QP
6	*	434.0651	64.96	-10.17	54.79	100.83	-46.04	peak
7		763.3757	35.83	-4.83	31.00	46.00	-15.00	QP
8		869.1302	40.33	-3.65	36.68	80.83	-44.15	peak

For average Emission

Frequency MHz	Peak Level dBuV/m	Duty cycle factor	Average Level dBuV/m	Limit AV	Margin	Polarization
433.92	54.15	-8.29	45.86	80.83	-34.97	Horizontal
867.84	51.74	-8.29	43.45	60.83	-17.38	Horizontal

Notes: 1. Average emission Level = Peak Level + Duty cycle factor
2.Duty cycle level please see clause 9.

Frequency MHz	Peak Level dBuV/m	Duty cycle factor	Average Level dBuV/m	Limit AV	Margin	Polarization
433.92	54.79	-8.29	46.5	80.83	-34.33	Vertical
867.84	36.68	-8.29	28.39	60.83	-32.44	Vertical

Notes: 1. Average emission Level = Peak Level + Duty cycle factor
2. Duty cycle level please see clause 9.

Radiated Spurious Emission (1GHz to 10th harmonics)

Frequency MHz	Peak Level dBuV/m	Duty cycle factor	Average Level dBuV/m	Limit		Margin dB		Polarization
				PK	AV	PK	AV	
1301.76	50.21	-8.29	41.92	74	54	-23.79	-12.08	Vertical
1735.68	49.76	-8.29	41.47	80.83	60.83	-31.07	-19.36	Vertical
2603.52	50.07	-8.29	41.78	80.83	60.83	-30.76	-19.05	Vertical
3037.44	48.67	-8.29	40.38	80.83	60.83	-32.16	-20.45	Vertical
3471.36	49.73	-8.29	41.44	80.83	60.83	-31.1	-19.39	Vertical
3905.28	49.52	-8.29	41.23	74	54	-24.48	-12.77	Vertical
1301.76	46.46	-8.29	38.17	74	54	-27.54	-15.83	Horizontal
1735.68	42.74	-8.29	34.45	80.83	60.83	-38.09	-26.38	Horizontal
2603.52	43.56	-8.29	35.27	80.83	60.83	-37.27	-25.56	Horizontal
3037.44	42.63	-8.29	34.34	80.83	60.83	-38.2	-26.49	Horizontal
3471.36	47.82	-8.29	39.53	80.83	60.83	-33.01	-21.3	Horizontal
3905.28	47.29	-8.29	39	74	54	-26.71	-15	Horizontal

Notes: 1.Average emission Level = Peak Level + Duty cycle factor
2.Duty cycle level please see clause 9.
3. Pulse Desensitization Correction Factor
Pulse Width (PW) =52.6ms
RBW=1 MHz
PW(52.6ms) > 1/RBW (1us)
Therefore PDCF is not needed
4.Other harmonics emissions are lower than 20dB below the allowable limit.

8. Bandwidth Test

8.1 Block Diagram Of Test Setup

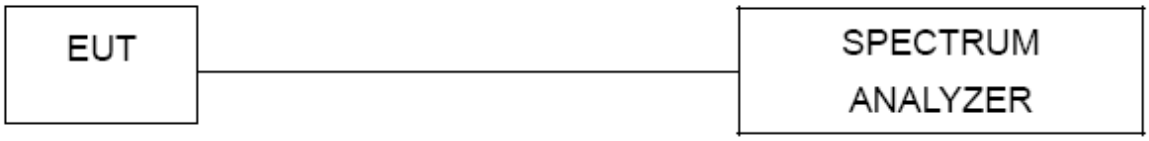

8.2 Limit

According to FCC 15.231(c) requirement:
The bandwidth of the emission shall be no wider than 0.25% of the center frequency for devices operating between 70 MHz to 900 MHz. Those devices operating above 900 MHz, the emission spurious shall be no wider than 0.5% of the center frequency. Bandwidth is determined at the points 20 dB down from the modulated carrier.
B.W (20dBc) Limit = 0.25% * f(MHz) = 0.25% * 433.79MHz = 1.0845MHz

Spectrum Parameter	Setting
Attenuation	Auto
Span Frequency	> Measurement Bandwidth or Channel Separation
RB	1% to 5% of the OBW
VB	≥RBW
Detector	Peak
Trace	Max Hold
Sweep Time	Auto

8.3 Test Procedure

a. The EUT was directly connected to the spectrum analyzer and antenna output port as show in the block diagram below,
b. Spectrum Setting : RBW= 1% to 5% of the OBW, VBW≥ RBW, Sweep time = Auto.

8.4 EUT Operating Conditions

The EUT tested system was configured as the statements of 2.4 Unless otherwise a special operating condition is specified in the follows during the testing.

8.5 Test Result

Temperature:	26 ℃	Relative Humidity:	54%
Pressure:	101kPa	Test Voltage:	DC 3V
Test Mode:	Mode 1		

Frequency	20dB Bandwidth (kHz)	Limit (MHz)	Result
433.92 MHz	3.718	1.0845	PASS

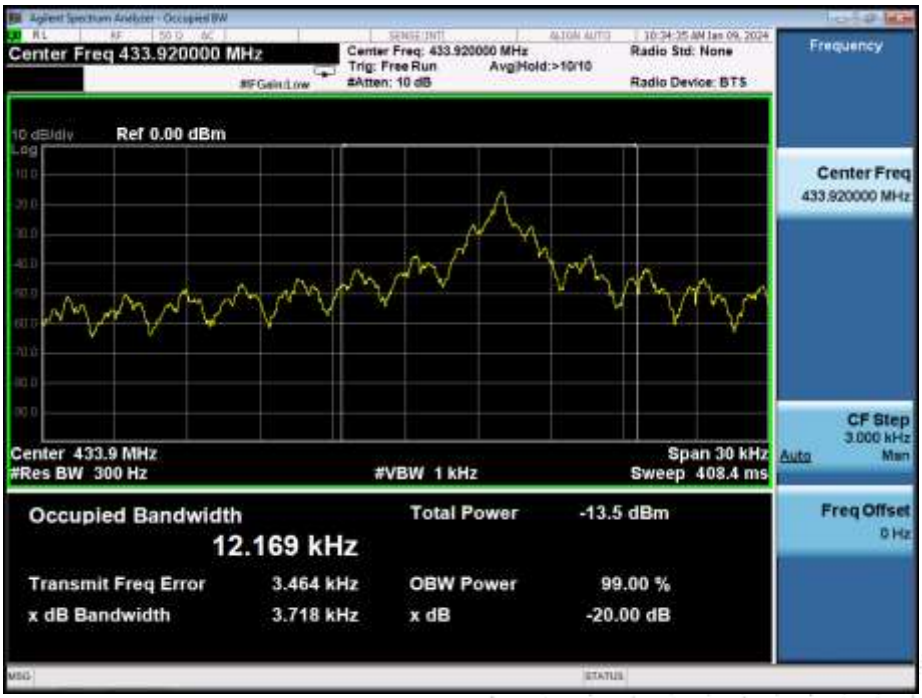

9. Calculation Of Average Factor

The output field strengths of specification in accordance with the FCC rules specify measurements with an average detector. During the test, a spectrum analyzer incorporating a peak detector was used. Therefore, a reduction factor can be applied to the resultant peak signal level and compared to the limit for measurement instrumentation incorporating an average detector.
The duty cycle is measured in 100 ms or the repetition cycle period, whichever is a shorter time frame. The duty cycle is measured by placing the spectrum analyzer to set zero span at 100kHz resolution bandwidth.
Averaging factor in dB =20log (duty cycle)
The duration of one cycle =52.6ms
The duty cycle is simply the on-time divided the duration of one cycle
Duty Cycle = (1.240ms*12+0.412ms*13)/ 52.6ms
=20.236ms / 52.6ms
=0.3847
Therefore, the averaging factor is found by 20log0.3847=-8.29dB
Test plot as follows:
Note: During the 100ms, the amount of pulse and on-time of pulse are the same for every pulse train.

Cycle

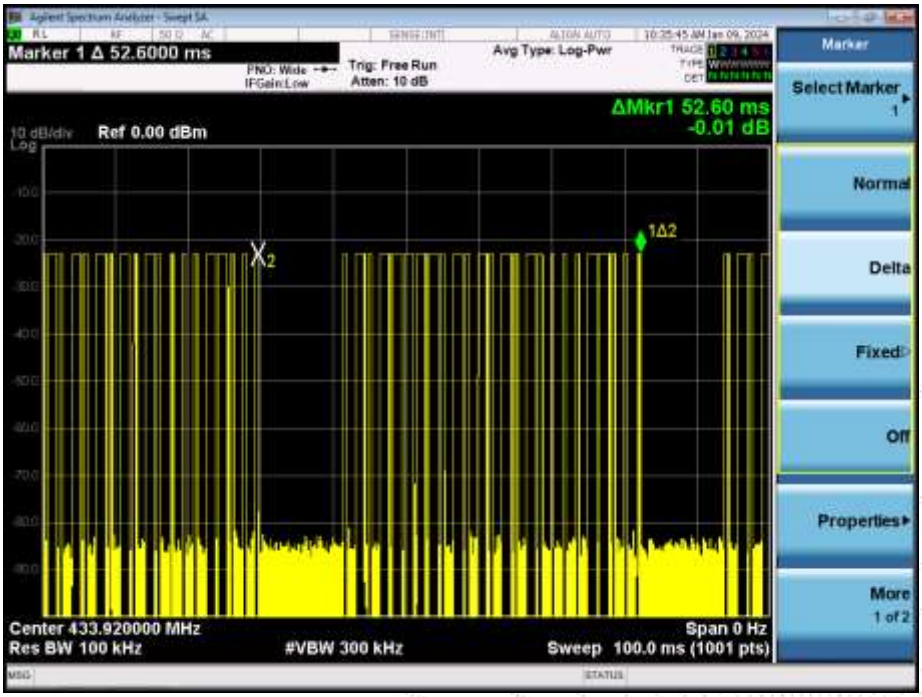

Pulse

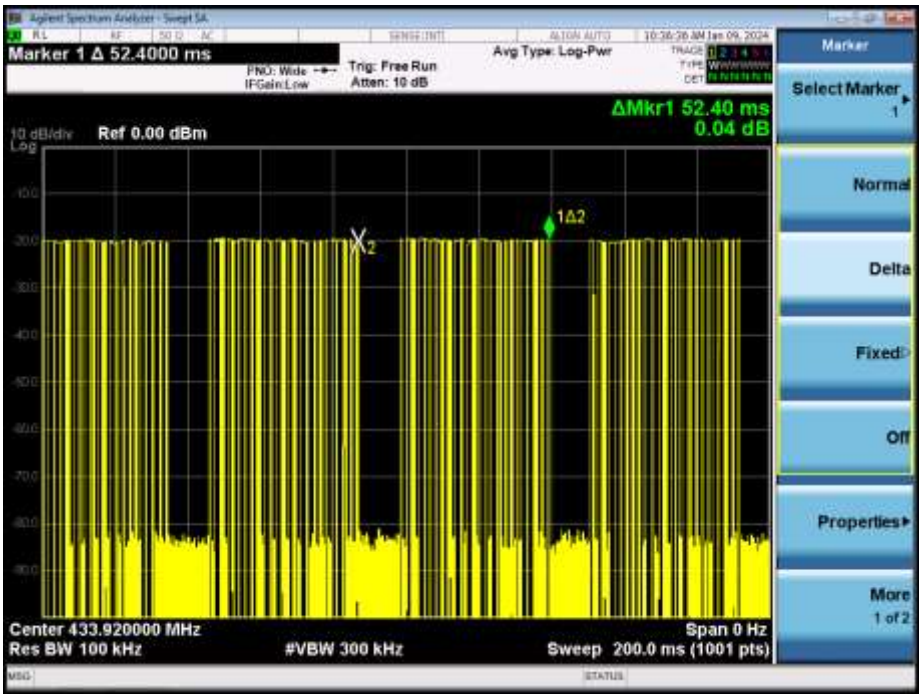
Marker 1 Δ 52.4000 ms
PNO: Wide
IFGain:Low
Trig: Free Run
Atten: 10 dB
Avg Type: Log-Pwr
ΔMkr1 52.40 ms
0.04 dB
10 dB/div
Log
Ref 0.00 dBm
1Δ2
Center 433.920000 MHz
Res BW 100 kHz
#VBW 300 kHz
Span 0 Hz
Sweep 200.0 ms (1001 pts)
Marker
Select Marker
1
Normal
Delta
Fixed
Off
Properties
More
1 of 2

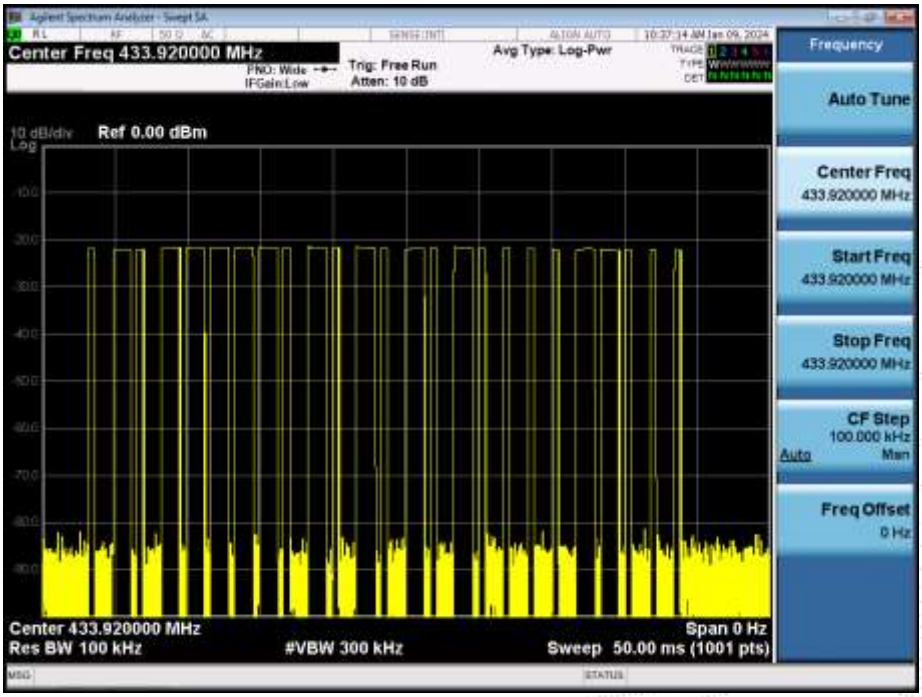
Center Freq 433.920000 MHz
PNO: Wide
IFGain:Low
Trig: Free Run
Atten: 10 dB
Avg Type: Log-Pwr
10 dB/div
Log
Ref 0.00 dBm
Center 433.920000 MHz
Res BW 100 kHz
#VBW 300 kHz
Span 0 Hz
Sweep 50.00 ms (1001 pts)
Frequency
Auto Tune
Center Freq
433.920000 MHz
Start Freq
433.920000 MHz
Stop Freq
433.920000 MHz
CF Step
100.000 kHz
Auto
Man
Freq Offset
0 Hz

On-time

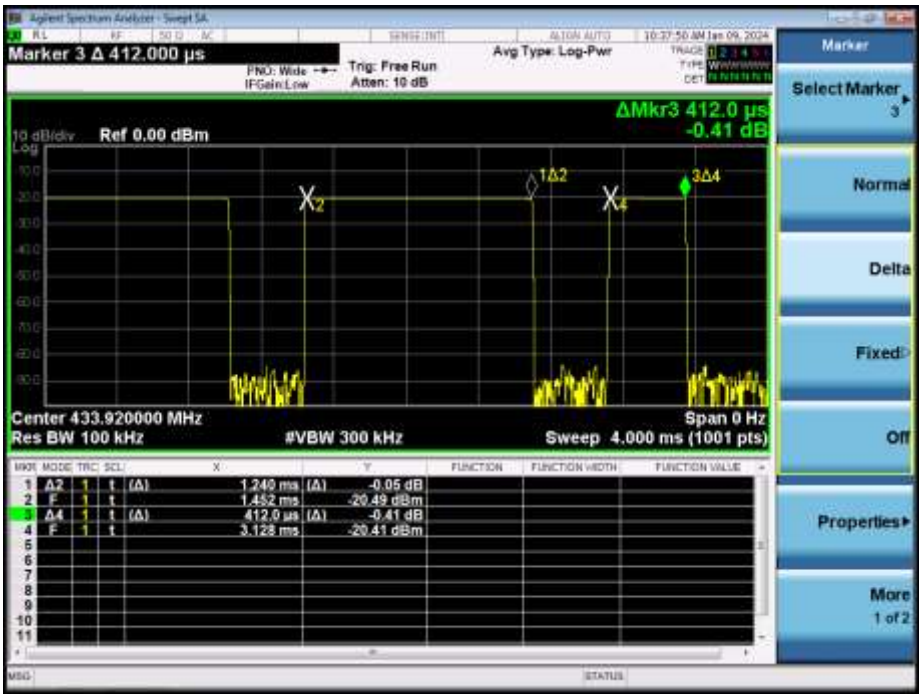
Marker 3 Δ 412.000 µs
PNO: Wide
IFGain:Low
Trig: Free Run
Atten: 10 dB
Avg Type: Log-Pwr
ΔMkr3 412.0 µs
-0.41 dB
10 dB/div Ref 0.00 dBm
Log
Center 433.920000 MHz
Res BW 100 kHz
#VBW 300 kHz
Span 0 Hz
Sweep 4.000 ms (1001 pts)
1 Δ2 1 t (Δ) 1.240 ms (Δ) -0.05 dB
2 F 1 t 1.452 ms -20.49 dBm
3 Δ4 1 t (Δ) 412.0 µs (Δ) -0.41 dB
4 F 1 t 3.128 ms -20.41 dBm
Marker
Select Marker 3
Normal
Delta
Fixed
Off
Properties
More 1 of 2

10. Dwell Time

10.1 Block Diagram Of Test Setup

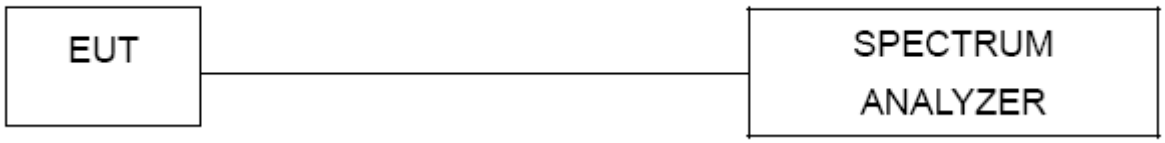

10.2 Limit

According to FCC 15.231(a) requirement:
A manually operated transmitter shall employ a switch that will automatically deactivate the transmitter within not more than 5 seconds of being released.

10.3 Test Procedure

a) Check the calibration of the measuring instrument using either an internal calibrator or a known signal from an external generator.
b) Position the EUT without connection to measurement instrument. Turn on the EUT and connect its antenna terminal to measurement instrument via a low loss cable. Then set it to any one measured frequency within its operating range, and make sure the instrument is operated in its linear range.
c) Set RBW to 100 kHz and VBW of spectrum analyzer to 300 kHz with a convenient frequency span including 100 kHz bandwidth from band edge.
d) Measure the highest amplitude appearing on spectral display and set it as a reference level. Plot the graph with marking the highest point and edge frequency.
e) Repeat above procedures until all measured frequencies were complete.

10.4 Test Result

Dwell time	Limit (second)	Result
400ms	<5s	Pass

11. Antenna Requirement

11.1 Standard Requirement

15.203 requirement: For intentional device, according to 15.203: an intentional radiator shall be designed to ensure that no antenna other than that furnished by the responsible party shall be used with the device.

11.2 EUT Antenna

The EUT antenna is the Internal antenna. It comply with the standard requirement.

12. EUT Photographs

EUT Photo 1

EUT Photo 2

NOTE: Appendix-Photographs Of EUT Constructional Details

13. EUT Test Setup Photographs

Radiated Measurement Photos

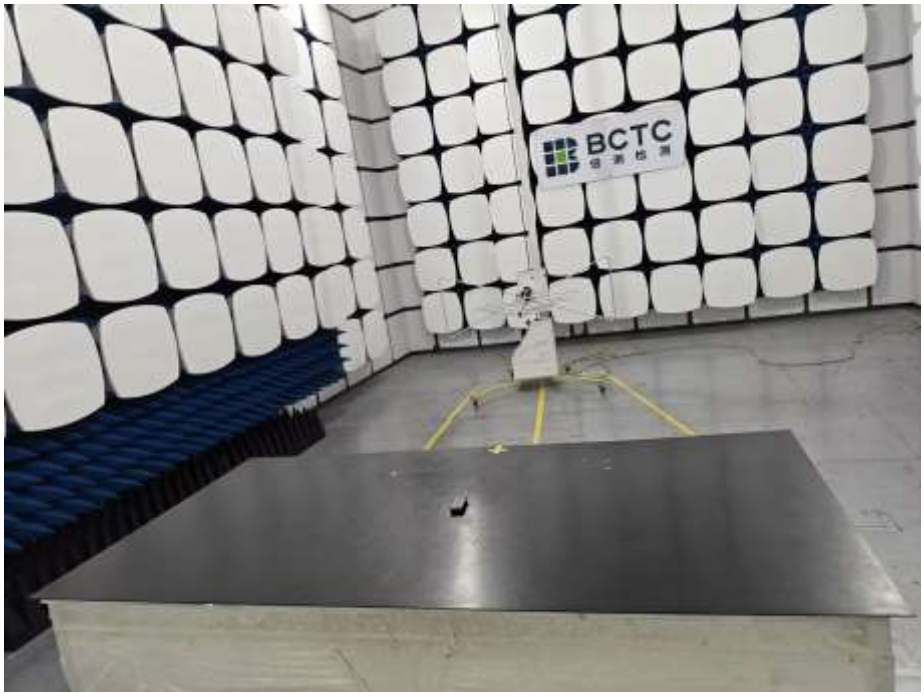

STATEMENT

1. The equipment lists are traceable to the national reference standards.

2. The test report can not be partially copied unless prior written approval is issued from our lab.

3. The test report is invalid without the "special seal for inspection and testing".

4. The test report is invalid without the signature of the approver.

5. The test process and test result is only related to the Unit Under Test.

6. Sample information is provided by the client and the laboratory is not responsible for its authenticity.

7. The quality system of our laboratory is in accordance with ISO/IEC17025.

8. If there is any objection to this test report, the client should inform issuing laboratory within 15 days from the date of receiving test report.

Address:
1-2/F., Building B, Pengzhou Industrial Park, No.158, Fuyuan 1st Road, Zhancheng, Fuhai Subdistrict, Bao'an District, Shenzhen, Guangdong, China

TEL: 400-788-9558

P.C.: 518103

FAX: 0755-33229357

Website: http://www.chnbctc.com

E-Mail: bctc@bctc-lab.com.cn

※※※※※ END ※※※※※