CITYSPORTS

User Manual

MODE:CS-WP9

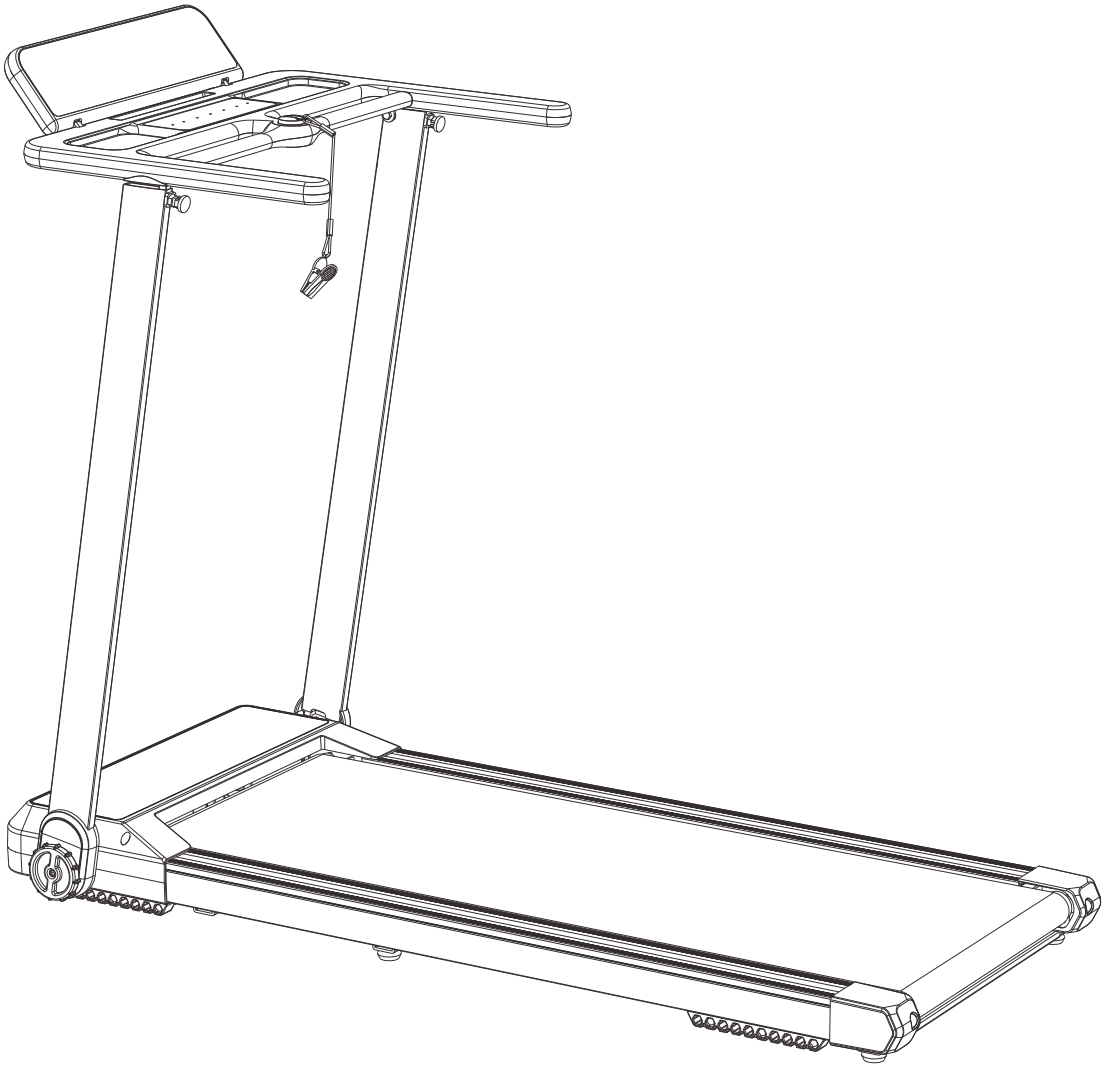

Please read this manual carefully and keep it properly before using the product!

EU V1.2.2

HOW TO CONTACT US ON AMAZON?

Step 1: **Log in to your Amazon account.**

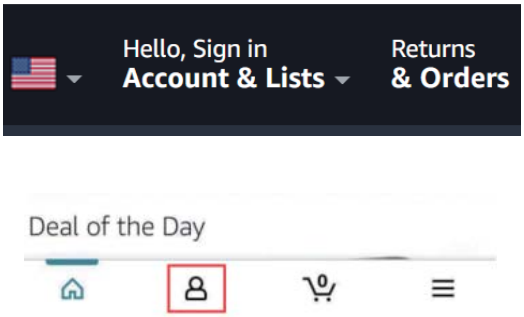

Step 2: Go to **Your Orders**. Select **Problem with order** in the list.

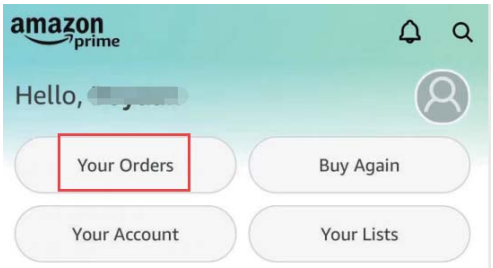

Step 3: Click the "**Ask a Question**" button. Choose your topic from list displayed.

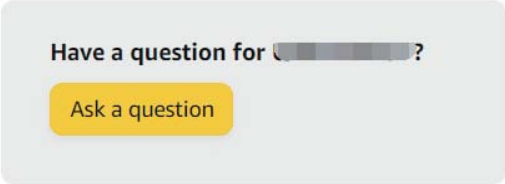

Step 4: Select **Contact seller.**

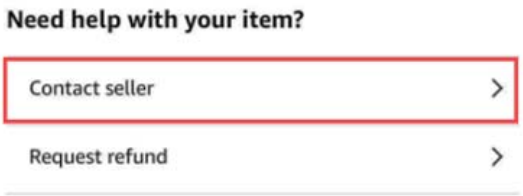

***If you purchased CITYSPORTS products by other platforms or channels, please also find the corresponding seller contact support. Thanks for your support and patience!**

CONTENTS

EN----------01

FR----------21

DE----------41

ES----------61

IT----------81

NL----------101

PL----------121

Catalogue

Safety Precautions and Warning Instructions----------02

Product Instruction----------06

Installation Steps ----------08

Workout Routines ----------12

Manual Guidelines ----------13

Error Codes and Solutions ----------17

Maintenance ----------19

Service Commitment----------20

1.Safety Precautions and Warning Instructions

Attentions: Please read the instructions carefully before use and pay attention to the following safety precautions:

◆The treadmill should be properly placed indoors to avoid moisture. It should not splash water on the treadmill or place any foreign matter.

◆Please wear proper sportswear and shoes before exercise. It is strictly forbidden to exercise barefoot on the treadmill and stretch your whole body.

◆The power plug must be reliably grounded, and the socket must have a special circuit to avoid sharing with other electrical equipment.

◆Children should stay away from the machine to avoid accidents.

◆Overload operation for a long time should be avoided, otherwise the motor and controller will be damaged, the wear and aging of bearings, running belts and running plates will be accelerated, and regular maintenance will be carried out.

◆Reduce indoor dust, maintain a certain humidity in the room, and avoid generating strong static electricity, otherwise it may interfere with the normal operation of electronic meters and controllers.

◆Please turn off the power supply of the treadmill after exercise.

◆Please keep indoor air circulation when using the treadmill.

◆Please clip the safety lock cable clip on the clothes during movement to prevent safe shutdown in case of emergency.

◆If you feel uncomfortable or abnormal during use, please stop exercising and consult a doctor.

◆The safety area behind the treadmill is 1000x2000mm.

◆Emergency jump: hold the handrail with both hands to support the body, and at the same time, put both feet on the side bar to jump off the treadmill from one side.

Warnings: **In order to reduce the occurrence of accidents or injury to others, please observe the following regulations:**

◆Before using the treadmill, please check whether the clothes are fastened or zipped up.

◆Don't wear clothes that are easily hooked by the treadmill.

◆Do not put the power cord close to hot objects. Keep children away from the treadmill.

◆Don't use the treadmill outdoors.

◆Keep children away from the treadmill.

◆Non-professional personnel shall not open the upper shield and the left and right rear tailstock without authorization.

Only one person can move on the treadmill when the machine is started.

◆If you feel dizzy, chest pain, nausea, or shortness of breath when exercising, please stop exercising immediately and consult your fitness instructor.

Warning!

◆When receiving treatment from a doctor or the following patients, please consult with a professional doctor before use.
◆(1) Those who are suffering from back pain now or have been injured in the past in their legs, waist and neck, and those who are numb in their legs, waist, neck and hands (those with chronic diseases such as intervertebral disc herniation, spondylolisthesis, cervical spondylosis, etc.).
◆(2) People with rheumatoid arthritis, rheumatism and gout.
◆(3) People with osteoporosis and other abnormalities.
◆(4) People with circulatory disorders (heart disease, vascular disorders, hypertension, etc.).
◆(5) People with respiratory disorders.
◆(6) Those who are using artificial heart rate regulators to implant in vivo medical electronic instruments.
◆(7) Those with malignant tumors.
◆(8) People with blood circulation disorders such as thromboembolism or serious lipoma, acute lipoma or various skin infections.
◆(9) People with perceptual impairment caused by high peripheral circulation disorder caused by diabetes, etc.
◆(10) People with skin trauma.
◆(11) High fever due to illness (38 ° C or above).
◆(12) The back bone is abnormal or bent.
◆(13) Those who are pregnant or may be pregnant or are in the period of menstruation.
◆(14) Those who feel abnormal and need to recuperate.
◆(15) Those who are obviously in poor physical condition.
◆(16) Users for the purpose of rehabilitation.
◆(17) In addition to the above conditions, those who feel abnormal.

◆——May cause accidents or poor physical condition.
◆ When you feel low back pain, numbness of legs and feet, dizziness, heartbeat and other body pain or coordination feelings or abnormalities that are different from normal during exercise, stop using immediately and consult a doctor.
◆ Do not let children use this product or play around it.
——Risk of injury if not take in carefully care for children
◆ Children's protectors should pay attention not to let children play with this product.
——Risk of injury if not observed.
◆ Please make sure that there are no people or pets around (the back, bottom and front of the product) when using or loading and taking out the product and making it slide.

Forbidden!

◆ Do not use it when the shell is cracked, or peeled off (the internal structure is exposed) or the welding part is peeled off.
——Otherwise, accidents or injuries may occur.
◆ Do not jump up or down during exercise.
——Injury may result from falling.
◆ Do not use or keep it outdoors, near the bathroom and other places with moisture and water drops.
◆ Do not use or keep it in places with high temperature, such as the surrounding of the stove, and on heating appliances such as electric carpet, in places with direct sunlight.
——Otherwise, it may cause electric leakage and fire.
◆ Do not use when the power cord or plug is damaged or the socket is loose.
——Otherwise, electric shock, short circuit and fire may be caused.
◆ Do not damage or forcibly bend or twist the power cord. At the same time, do not place heavy objects on it, and do not clamp the wire.
——Otherwise, it will cause fire or electric shock.
◆ Do not use it by two or more people at the same time, and pay attention not to make people around close during use.
——Otherwise, accidents or injuries may occur due to falls.
◆ Don't use it if you can't express your consciousness or you can't use it by yourself.
——Accidents or injuries may occur.

Do not decompose!

◆ It is absolutely forbidden to disassemble, and repair.
——Danger of injury due to mechanical failure.

Avoid contact with water!

◆ Do not spray water or other conductive liquids on the main body or operating part.
——It may cause electric shock and fire.

Forbidden!

◆ People who do not exercise normally should not suddenly do intense exercise.
◆ Do not use it after eating or when you are tired, when you just exercise or when your physical strength is abnormal.
——May cause damage to health.
◆ This product is suitable for family use, not for a large number of unspecified users such as schools and gymnasiums.
——Risk of injury.
◆ Do not use it at the same time of eating or other activities.
◆ Don't use it when you feel dull after drinking.
——Accidents or injuries may occur.
◆ Do not use it with hard objects in the pants pocket.
——May cause accidents or injuries.
◆ Do not attach pins, garbage or water to the power plug.
——It may cause electric shock, short circuit and fire.
◆ During use, do not pull out the power plug or switch the power switch to "off".

Pull out the power plug!

◆ When not in use, pull out the power head from the socket.
——Dust and moisture will degrade the insulation, resulting in leakage fire.
◆ Be sure to pull out the power plug from the socket during maintenance.
——Failure to comply may result in electric shock or injury.
◆ If it doesn't start or feels abnormal, stop using it, immediately pull out the power plug and entrust inspection and repair.
——Failure to comply may result in electric shock or injury.
◆ In case of power failure, pull out the power plug immediately.
◆ The product must be grounded. If the machine is malfunctioning, the grounding will provide the channel with the least resistance for the current to reduce the risk of electric shock.
◆ This product is equipped with wires with equipment grounding conductor and grounding plug. The plug must be inserted into a suitable socket that has been properly installed and grounded in full accordance with local regulations or decrees

Danger!

Improper connection of equipment grounding conductor may cause electric shock hazard. If you have any questions about whether the grounding of the product is correct, please entrust a professional electrician to check. Even if the plug and socket attached to this product do not match, it cannot be modified.
Please entrust a professional electrician to install suitable sockets.
◆ The product has a grounding plug. Please confirm that the product is connected to a socket with the same shape. This product cannot use adapter socket.

2. Product Instruction

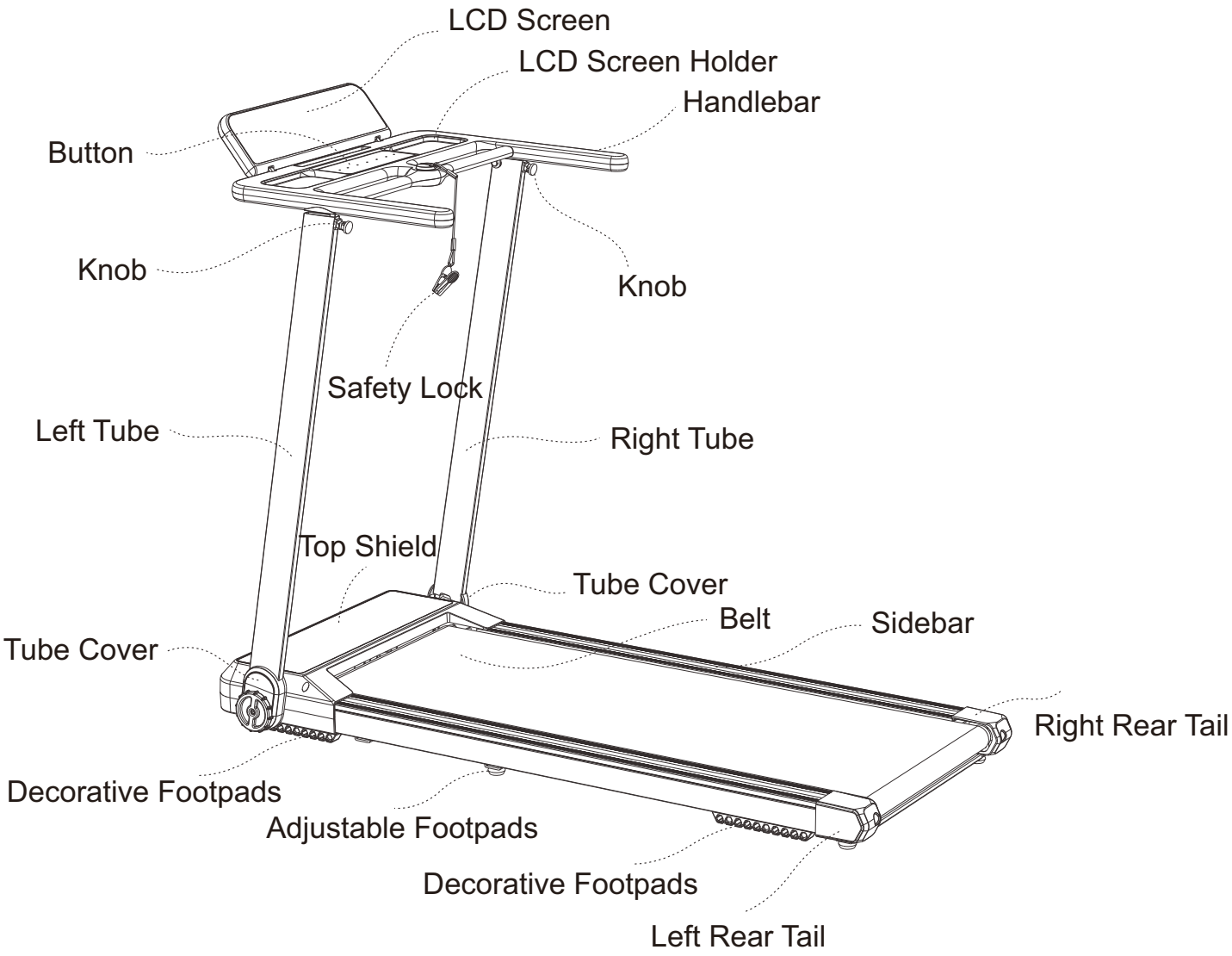

Package Lists:

NO.	Name	Quantity	Remarks
1	Treadmill	1	
2	Accessory	1	Attached

Technical Parameter:

Voltage	AC 100-120V 50/60Hz
Max Load	120 Kg
Folding Size	1232*610*102 mm
Product Size	1238*610*1030 mm
Running Area	400*1020 mm
Power	1400W
Speed	1-12km/h
Console	LCD Screen
Net Weight	26.5 kg
Max. transmission power	8dBm (at the antenna input)
Frequency Range	433.05~434.79 MHz

Parts Lists:

NO.	Name	Quantity	Note
1	5mm Inner hexagon spanner	1	Other
2	6mm Inner hexagon spanner	1	Adjust the running belt
3	No.13-15 Wrench	1	
4	Footpad	2	
5	Power Plug	1	
6	Safety Lock	1	
7	Silicone Oil	1	
8	Manual	1	
9	No.10 wrench	1	

3. Installation Steps

1. Remove the main unit from the box and place it flat on the carpet or soft cushion, as shown in step ① of the following figure, first loosen the folding knob under the left and right risers by 2-3 turns counterclockwise, at this time the lower end of the risers will naturally rise up to the outside. The lower end of the riser will naturally rise to the outside;

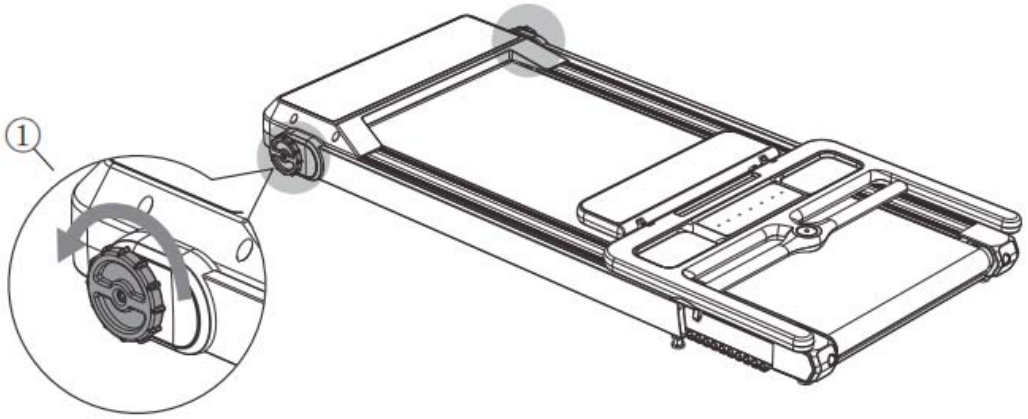

2. As shown in step ② of the following figure, lift the column up to the limit position, hold the riser with one hand, and tighten the folding knobs below the left and right columns clockwise as shown in step ③ of the following figure.

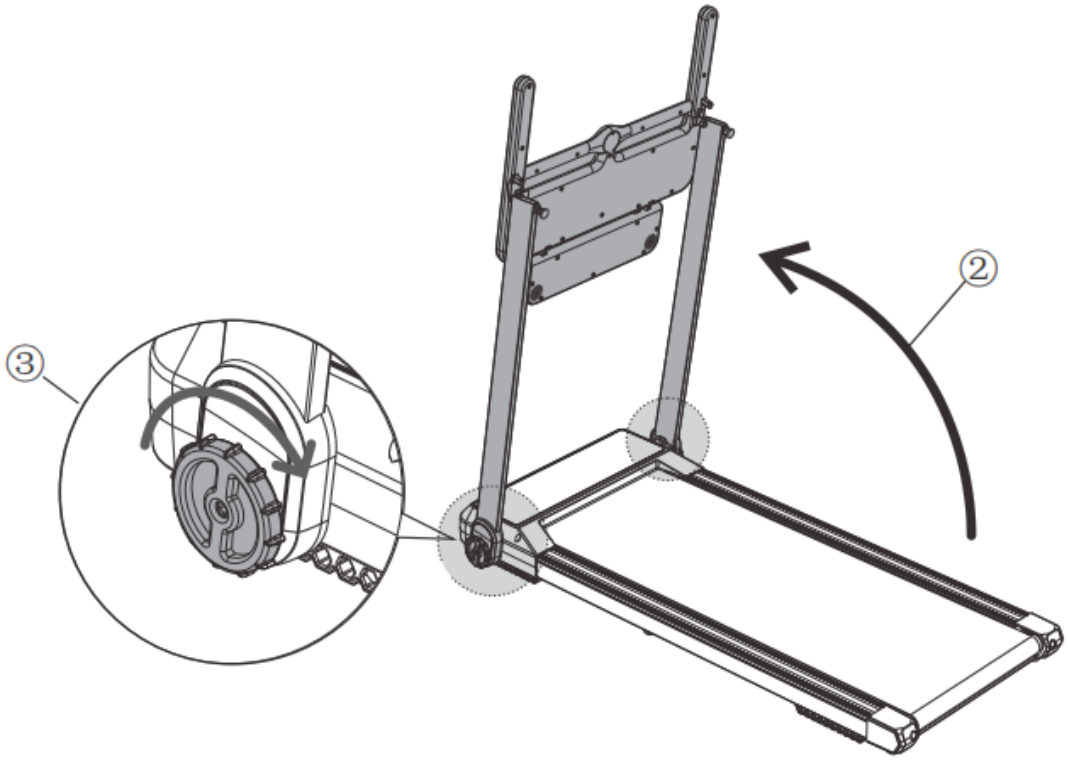

3. As shown in step ④ below, pull out the pull pin on the top of the right and left risers, and then rotate the pin a little bit to make the pin snap into place. As shown in step ⑤, rotate the electronic watch stand to the horizontal position (pay attention to the communication line in the right riser to prevent extrusion), and then return the pull pin in step ④ to make the electronic watch stand fixed on the left and right risers, as shown in step ⑥, adjust the electronic watch to its own suitable position. As shown in step ⑦, place the red safety lock in the yellow position of the electronic watch holder, and clip the end with the clip to your clothes when running.

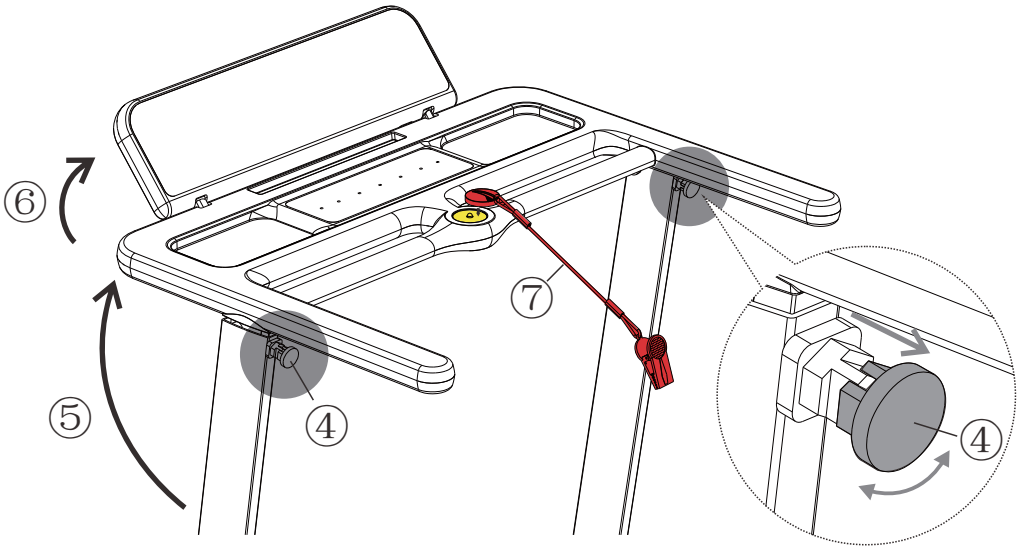

4. As shown in step ⑧of the following figure, after the riser is locked, fasten the riser cover on the left and right risers respectively. Plug the power cord into the socket at the front end of the running machine, plug in the power supply, turn on the power switch under the front end of the machine, and go to standby.

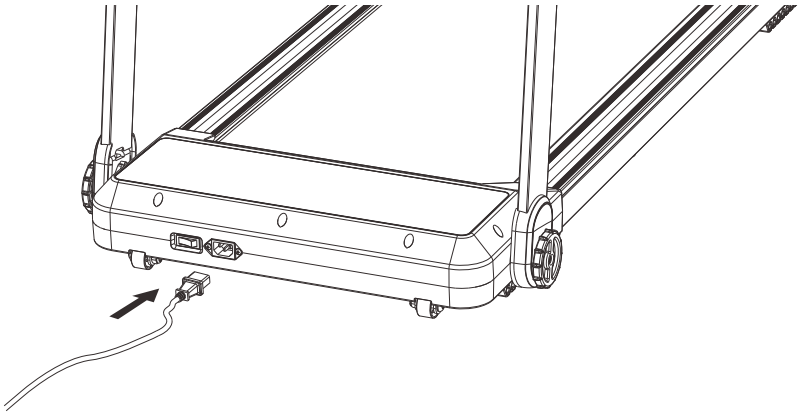

Note: After the unit is assembled, please check again if all bolts are locked

Footpad Installation and Adjustment

1 . First, use a packaging material to pad the front of the treadmill high; As shown in the picture on the right, screw the two pads into the screw holes, tighten clockwise and loosen counterclockwise. (The footpad can be mounted to elevate the runway, which users can install as required)

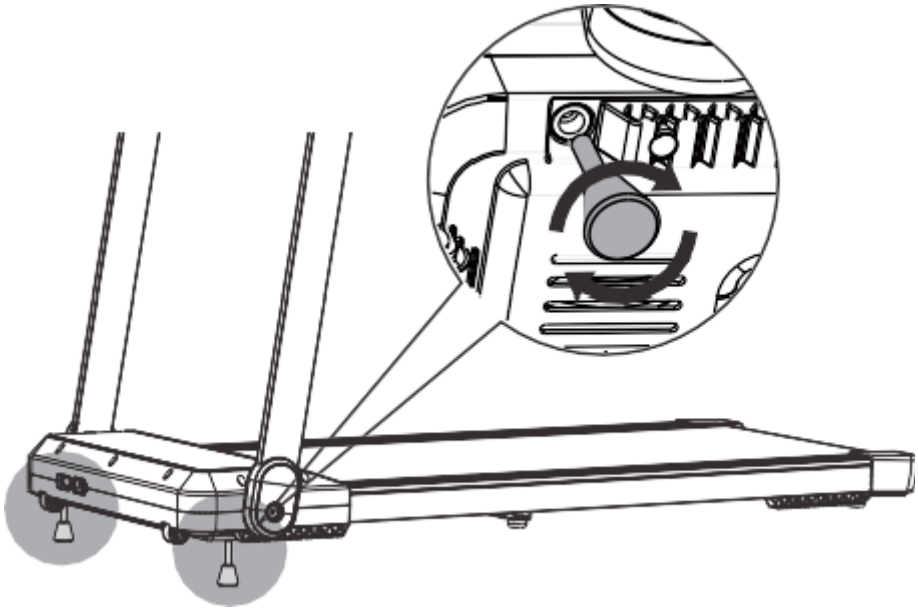

2. Foot Pad Adjustment: If the ground is uneven or the treadmill is shaking, or if the two foot pads from the previous step are installed, please adjust the four adjustable foot pads at the bottom, middle, and tail of the treadmill to the appropriate position, and the foot pads must fit the ground. (As shown in the following figure)

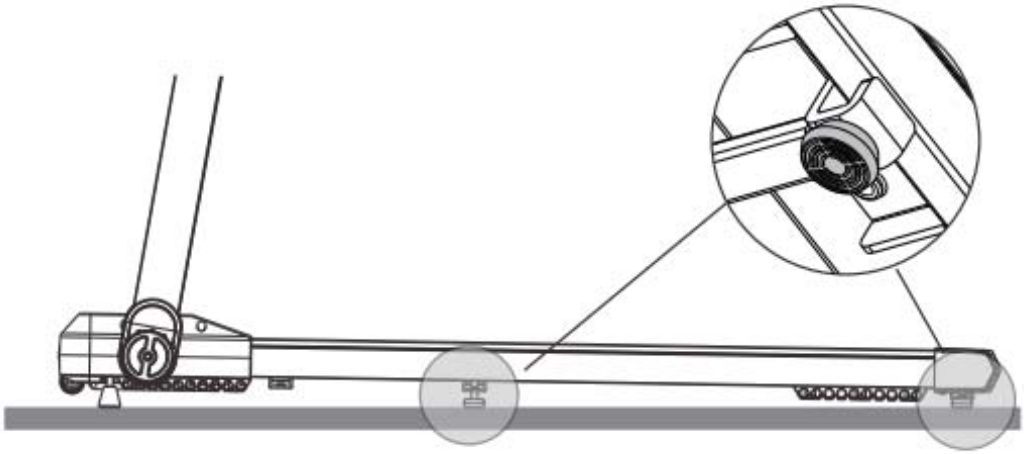

Folding Instructions

1. As shown in step ① of the right figure, install the left and right vertical pipes, and pull out the square pull pin and rotate it a bit to make it pull pin stuck. Slowly move the electronic watch in the direction of the arrow. And put it down.

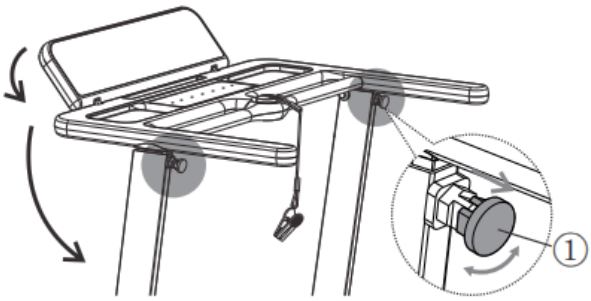

2. As shown in step ② of the figure, fold the knobs below the left and right pillars and rotate counterclockwise to loosen them by 3 to 4 turns.

3. As shown in step ③ of the figure, slowly lower the electronic watch stand and the left and right vertical pipes onto the running platform.

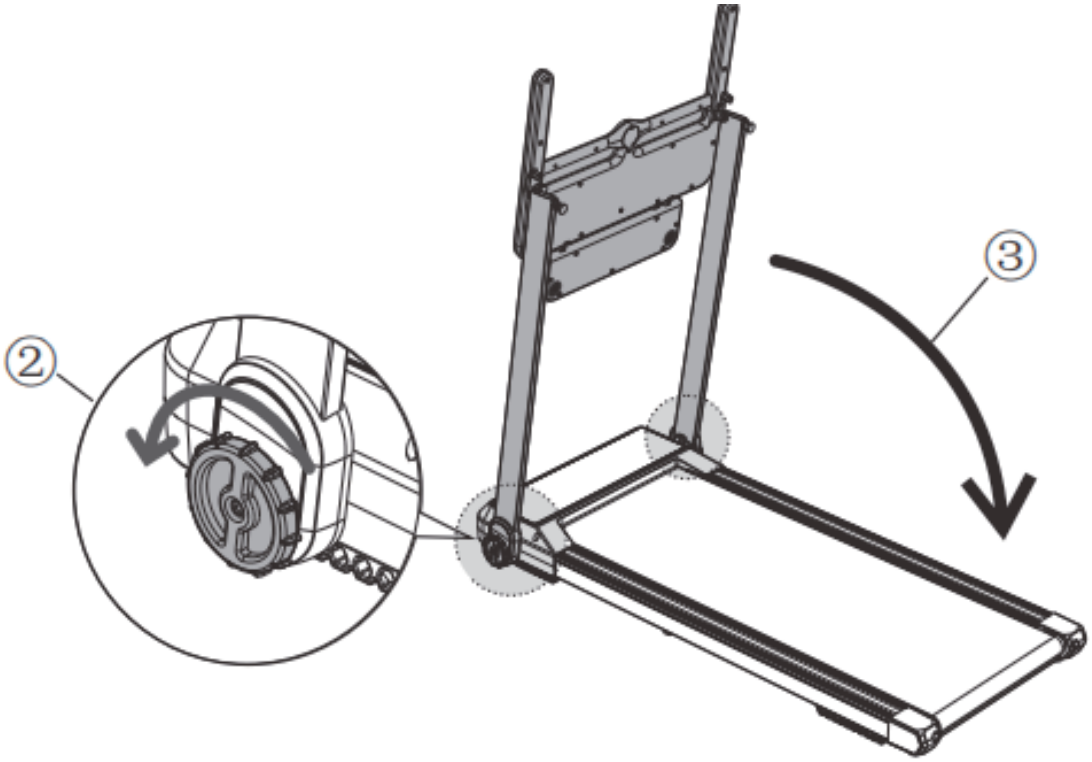

4. As shown in step ④ of the figure, fold the knobs below the left and right pillars and lock them clockwise to complete the folding.

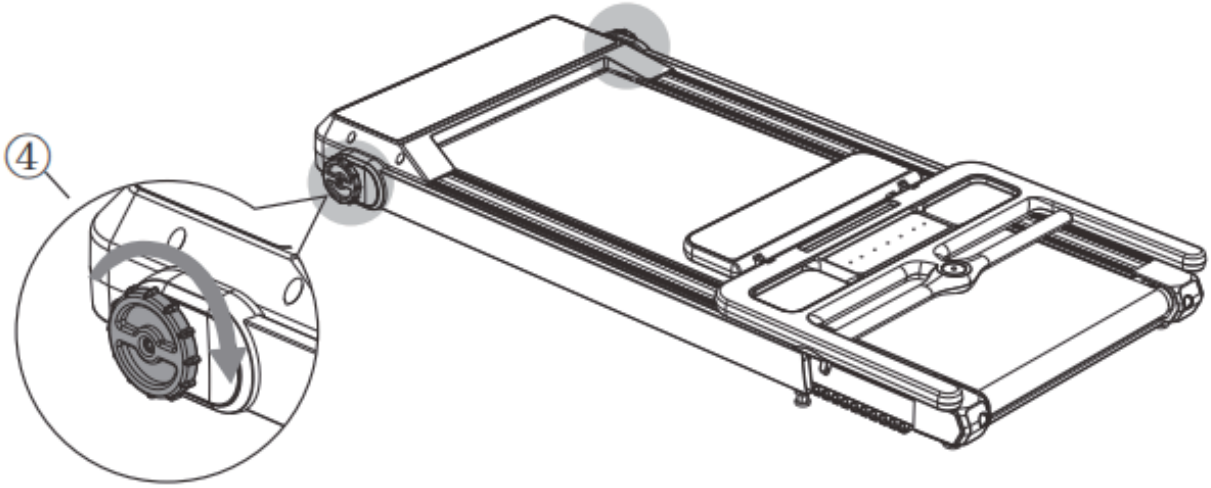

4. Workout Routines

Warm-up

A warm-up exercise of 5-10 minutes is required before each operation.

Breathing

Do not hold your breath during the operation. Normally, when you are ready to restore your movements, breathe through your nose and exhale with your mouth. Breathing should be coordinated with your movements. If you breathe too quickly, you should immediately stop exercising.

Frequency

Muscles in the same area should have 48 hours of rest, that is, the same area can be trained the next day.

Load

According to the individual physical condition to determine the amount of training, and then exercise according to the principle of asymptotic load, muscle soreness is normal at the beginning of training, as long as you continue the exercise, soreness can be eliminated.

Relax

Five minutes of restoring action should be taken after each exercise, especially when the foot muscles are stretched and relaxed to prevent long-term coagulation and maintain muscle elasticity.

Diet

In order to protect the digestive system, you can exercise one hour after a meal. After training, you should eat at least half an hour. During exercise, you should drink less water, especially large amounts of water, so as to avoid increasing the burden on the heart and kidney.

Stretching

No matter how fast you walk, it's best to stretch first. Warm muscles stretch more easily, so walk up first.

5-10 minutes to warm up. Then stop and stretch five times for 10 seconds or more on each leg. Do it again after the exercise

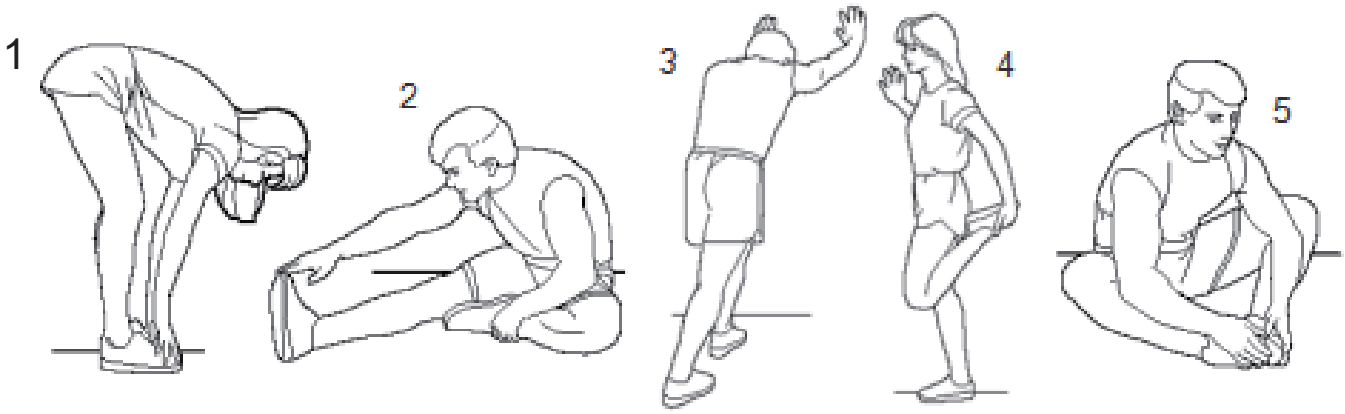

1. Stretch down
Your knees are slightly bent, your body slowly bends forward, your back and shoulders relaxed, and your hands touch your toes as much as possible. Hold for 10-15 seconds, then relax. Repeat three times (see Fig.1).
2.Stretching of hamstring
Sit on a clean cushion and straighten one leg. Put the other leg in so that it is close to the inside of the straight leg. Try to touch your toes with your hands. Hold for 10-15 seconds, then relax. Repeat each leg three times (see Fig. 2).
3. Extension of calf and heel tendon
Stand with two handrails or trees, one foot behind. Keep your back legs upright and heels on the floor, tilting toward the wall or tree. Hold for 10 to 15 seconds and then relax. Repeat each leg three times (see Fig. 3).
4. Quadriceps Stretch
Master balance with left handrail or table, then stretch back with right hand, grab right ankle and pull slowly towards buttock until you feel tense muscles in front of your thighs. Hold for 10-15 seconds, then relax. Repeat each leg three times (see Fig.4).
5. Sartorius stretch (muscle inside thigh)
Sit with your feet facing each other and your knees facing out. Grab your feet with both hands and pull them towards your groin. Hold for 10-15 seconds, then relax. Repeat 3 times (see Fig.5).

5. Manual Guidelines

Treadmill user manual

1. Connect the power supply to check if the machine is working properly.
2. Set the running speed of the running belt to be 1-12KM/H.
3. Clip the safety lock clip on the skirt of the athlete's chest.
4. Before exercising, check the stability and function of the treadmill. It is strictly forbidden to start the treadmill on the running belt. Before running, stand on the left and right bars, hold the handrails, and then step into the running belt to execute. When starting, grab the handrail with one hand and press the spreadsheet START/STOP key with the other hand. The treadmill starts with a delay of 3 seconds and runs at 1KM/H. Press'+'and the motor speed rises to 2-3KM/H (this is Learn to run at the most comfortable speed, grab the handrails with both hands, and step up the running band with both feet. You will soon be able to run at the same speed as the running band.
5. After a few minutes, you can increase your running speed by pressing the'+'key on your spreadsheet. You can also press the'-'key to slow it down.
6. You can press the START/STOP key of the spreadsheet at any time during the operation to stop the motor.
7. In the running state, if you press the "3, 6, 9" speed key directly at any speed, the running speed of the running belt is the relative key speed value.

Safety Lock Warning
Note: If the safety lock is pulled off during exercise, the treadmill will immediately stop automatically and the control panel will refuse any operation then you will see the screen shows "E07".

1.Display and Key:

(1) The LCD window displays the following functions:
Time/Speed/Distance/Calorie Window:
5 seconds to switch display time, speed, distance and calorie data,

Time display range: 0:00-99:59
Speed display range: 1-12KM/H
Distance display range: 0.00-99.99
Calorie display range: 0.00-9999

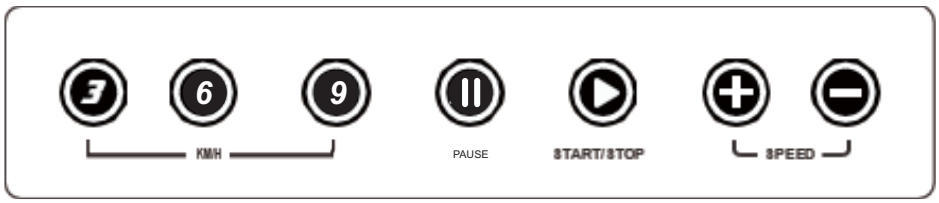

(2)Spreadsheet function keys: 3, 6, 9, speed+, speed-, stop/stop.
A.3: In the running state, at any speed, press the speed direct key, then the running speed of the running belt is adjusted to 3KM/H.
B.6: In the running state, at any speed, press the speed direct key, then the running speed of the running belt is adjusted to 6KM/H.
C.9: In the running state, at any speed, press this speed direct key, then the running speed of the running belt is adjusted to 9KM/H.
D.SPEED+: Keys increase speed during exercise.
E.SPEED-: Keys slow down during exercise.
F.START/STOP: Pressing the START/STOP key in the stop state will start the treadmill; Press the START/STOP key while running to slow down the runner.
G. PAUSE: In the running state, press this key to pause and press again to continue running.

Startup Instructions

1. Stick the safety lock to the safety lock position on the panel, turn on the power switch, buzzer will beep and the system will go to standby.
2. Press the START key, the window shows a 3-second countdown, and every minus a buzzer beep, the motor will not start.
3. Start-up speed is: 1KM/H, at this time you can press the speed + and-keys to adjust the speed.

Bluetooth Operation Method

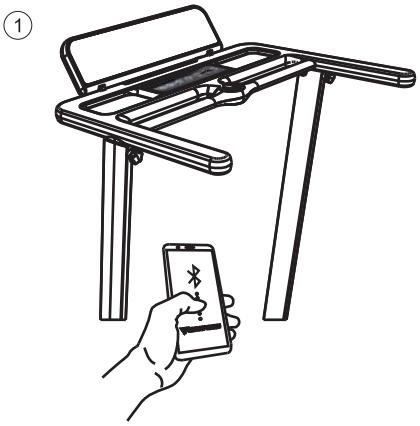

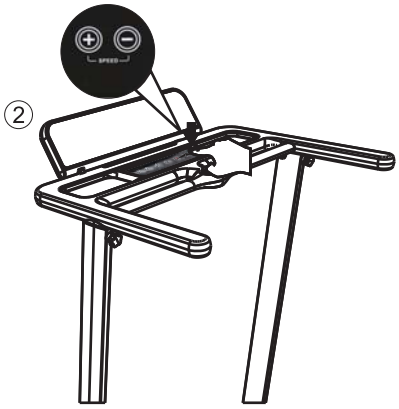

How to Get Connected to Bluetooth for CITYSPORTS Treadmill

First of all, turn on your mobile phone Bluetooth, long press the "-" key on the armrest, with a beep when the Bluetooth device name "CITYSPORTS-Audio" appears on your phone then connect it, and then the screen shows the Bluetooth logo indicates that the Bluetooth has been connected, and wait until you hear the ding-dong alert that means the match is completed.
To switch off the Bluetooth function, long press and hold the "-" key to be done.
Warm Tips:
Long press“-” for 30 seconds does not mean that the Bluetooth is completely opened, and you need to open the mobile phone to match, which will be OK; if not connected in more than 30 seconds, the Bluetooth will automatically close, then the way to wake up again the Bluetooth function is to repeat the above steps.

APP Instruction

Your "CITYSPORTS-Linker" treadmill has a built-in APP function, which makes it compatible with most Bluetooth Smart mobile devices.
In order to change certain functions of the treadmill, you must download this APP.

You can download the APP in the following two ways:

Method 1:

① iOS App Store Search “EQiSports” to install and download
App Store Link : https://apps.apple.com/in/app/eqisports/id1481795187

Android version download instructions: Google Play Store search “EQiSports” installation and download

Google Play Link: https://play.google.com/store/apps/details?id=com.yqzz.eqisports

Method 2 :
Please scan the QR code below to download the APP.

More interesting and practical APP functions are waiting for you to explore and discover!

(1) Method 1: Firstly, search for "EQISPORTS" in the app shop and download it to your mobile phone, then open the APP programme and select the treadmill button.

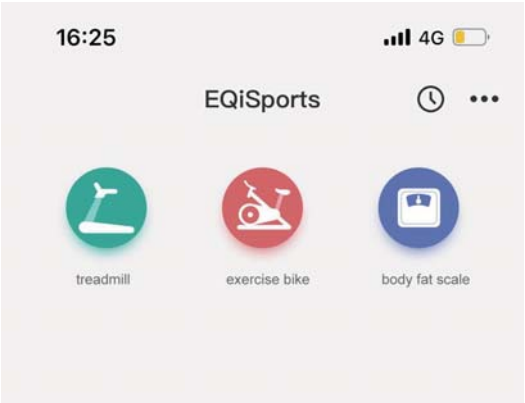

(2) After turning on the Bluetooth on the mobile phone, the EQISPORTS software will automatically search and match the Bluetooth. After the matching is successful, you can choose the corresponding treadmill program to set the target/custom/free treadmill, etc.

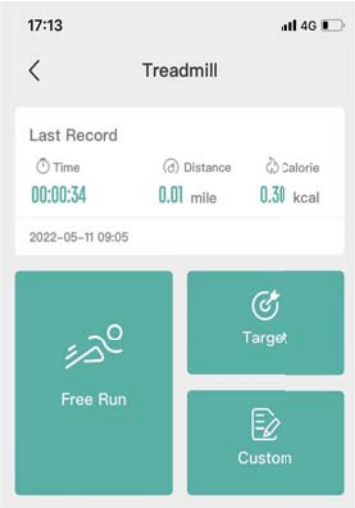

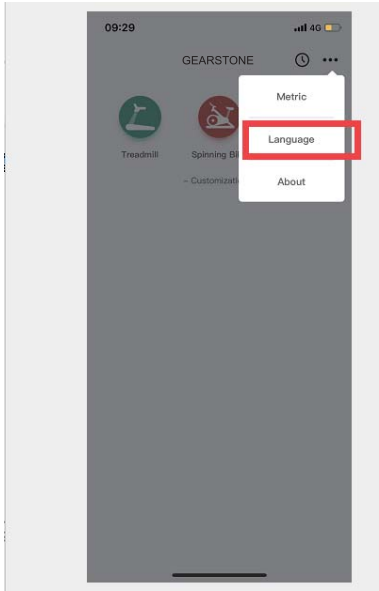

(3) APP function settings (the upper right corner of the interface can switch between kilometers/mile; English, Japanese, Russian, Spanish and other languages can be switched)

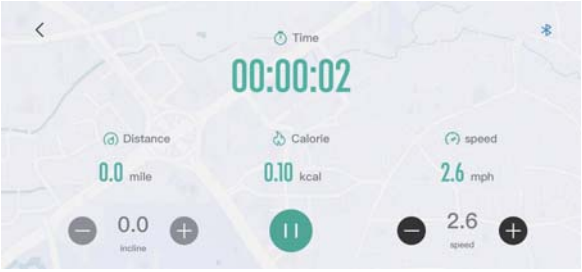

(4) APP connection speed control (acceleration/deceleration/calorie/mileage)

6. Error Codes and Solutions

If you have any other questions, please call your dealers or our company's after-sales service.

Fault	Cause	Solution
Treadmill not work-ing	not plugged in	Insert the power plug into the outlet
	The power switch is not turned on	Put the power switch in the ON position
	Safety lock not in place	Put the safety lock in place
	circuit signal system maybe open circuit	Check controller inputs and signal lines
	blown fuse	replace fuse
The running belt does not run smoothly	need to be lubricated	Add silicone oil lubricant
	The running belt is too tight	Adjust the tightness of the running belt
The running belt slipping	The running belt is too loose	Adjust the tightness of the running belt
	The drive belt is too loose	Adjust the tightness of the drive belt

The panel screen displays errors and troubleshooting methods

Error	Reason	Solution
E01	Poor communication	Signal line not plugged in, plug in again
E02	Whether the motor wire is loose or falling off and the carbon brush is worn out	Check whether the motor wire is loose or falling off. If it is not, check whether the carbon brush of the motor is worn out. If it is worn out, replace the motor. If it is not worn out, the electric control is damaged. Replace the electric control.
E03	Sensing signalworn	Induction line not plugged in, plug in again
E04	Controller or motor	Overload, replace controller, motor
E05	overload protection	Overload, replace electrical control
E06	Failure of system	System failure, replacement of electrical control
E07	Safety lock not sucked	Suck safety lock into lock position
Significant abnormality	External disturbance	Turn off the power switch and electrify after 1 minute.

7.Maintenance

Keep your treadmill at its best forever, and incorrect maintenance can damage or shorten its life.

a.Frequent inspection is required due to wear and tear; Worn or damaged accessories, such as motors, electronic controls, power lines, running belts, may be repaired or professionally repaired to the same degree of safety as when they are removed.
b.Replace defective parts or leave the equipment idle until repaired; (e.g. power cord)
c. Pay particular attention to the the easily worn parts (treadmill belt)
d. If the power cord is damaged, to avoid danger, it must be replaced by the manufacturer's service or similar professional staff.

1.lubrication

Running belts make it necessary to lubricate methyl silicone oil specially configured after a certain period of time.
Less than 3 hours, Lubricate once every 5 months
4-7 hours, Lubricate once every 2 months
more than 7 hours, Lubricate once month

Do not over lubricate. Not the more lubricant, the better.
Remember: reasonable lubrication is an important factor to prolong the life of the treadmill.

2.When it comes to checking whether the belt is worn or not in the running inspection step, it needs to be centered. It needs to be moistened like a lubricant. It only needs silicon to grasp the tree and grease (running a little bit, it will make you feel damp), and it can be seen that it can not be touched. It needs to be added with lubricant, If the running board is dry and there is no methyl silicone oil in the running board, it is necessary to add lubricant

◆Steps to apply lubricant to the running board: (as shown in the right figure)
◆Stop the running belt and fold the machine;
◆Lift up the running belt at the bottom of the main engine; Put the oil pot in the middle of the running belt as far as possible, spray methyl silicone oil on the inside of the running belt, and coat both sides of the running belt with methyl.
◆Run the treadmill at a speed of 1 km/h to evenly smear methyl silicone oil, and gently step on the running belt from left to right, and keep it for about few minutes, so that methyl silicone oil can be completely absorbed by the running belt.

3、Adjust the belt tension. All treadmills should adjust the belt tension before and after installation, but the belt tension may occur after a period of time. For example, it causes the runners to stop and slip when running. When this phenomenon occurs, adjust the adjusting bolt of the running belt from left to right in a clockwise direction with half a turn as the unit. If the running belt is too loose, the running belt and roller will slip when the foot is on the running belt, but too tight is not good, which will easily increase the load of the motor and damage the motor, running belt and roller.

4、Belt deviation adjustment
All treadmills should be adjusted with the running belt before and after installation. However, after a certain period of time, it may also deviate. The reasons are as follows:
① The host is not placed stably
② Make the runner's feet not in the running belt when exercising
③ Make the feet uneven
Artificially caused mistracking phenomenon, no-load rotation for a few minutes can return to normal, for the misalignment phenomenon that cannot be automatically recovered, the randomly equipped 6mm inner six-dimensional wrench should be gradually adjusted in half-turns.

Electric treadmill, under normal use within one year, if not man-made, can be provided free of charge to users
Accessories, after the expiration of the warranty period, the price of spare parts is excellent.

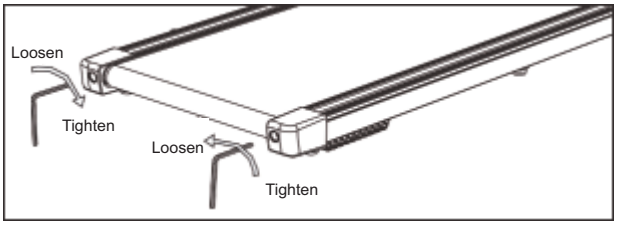

If the running band is left off: Adjust the left bolt clockwise or the right bolt counterclockwise.

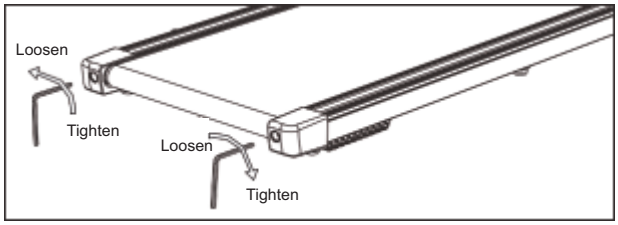

If the running belt is right: Adjust the right bolt clockwise or the left bolt counterclockwise.

Tips: Running belt deviation is not covered by warranty, mainly by the user in accordance with the manual maintenance, running belt deviation will be seriously damaged
Bad running belts must be found and corrected in time.

8.Service Commitment

This product is for home use only and we are not responsible for problems arising from commercial use. If your product is available
After the problem, please call the distributors around the after-sales service!
Performance Commitment
If the running band is left off: Adjust the left bolt clockwise or the right bolt counterclockwise.
This manual is for reference only and is subject to the actual product.

Remote control warning

This device contains licence-exempt transmitter(s)/receiver(s) that comply with Innovation, Science and Economic Development Canada's licence-exempt RSS(s). Operation is subject to the following two conditions:

(1) This device may not cause interference.

(2) This device must accept any interference, including interference that may cause undesired operation of the device.

RF exposure statement:

The device has been evaluated to meet general RF exposure requirement. The device can be used in portable exposure condition without restriction.

L'émetteur/récepteur exempt de licence contenu dans le présent appareil est conforme aux CNR d'Innovation, Sciences et Développement économique Canada applicables aux appareils radio exempts de licence. L'exploitation est autorisée aux deux conditions suivantes :

L'appareil ne doit pas produire de brouillage;

L'appareil doit accepter tout brouillage radioélectrique subi, même si le brouillage est susceptible d'en compromettre le fonctionnement.

Déclaration d'exposition RF:

L'appareil a été évalué pour répondre aux exigences générales d'exposition aux RF. L'appareil peut être utilisé sans restriction dans des conditions d'exposition portables.

FCC ID:

This device complies with Part 15 of the FCC Rules. Operation is subject to the f
ollowing two conditions: (1) this device may not cause harmful interference, and (2) this device must accept any interference received, including interference that may cause
undesired operation

NOTE: This equipment has been tested and found to comply with the limits for a Class B digital device, pursuant to Part 15 of the FCC Rules. These limits are designed to provide reasonable protection against harmful interference in a residential installation. This equipment generates, uses and can radiate radio frequency energy and, if not installed and used in accordance with the instructions, may cause harmful interference to radio communications. However, there is no guarantee that interference will not occur in a particular installation.

If this equipment does cause harmful interference to radio or television reception, which can be determined by turning the equipment off and on, the user is encouraged to try to correct the interference by one or more of the following measures:

-- Reorient or relocate the receiving antenna.

-- Increase the separation between the equipment and receiver.

-- Connect the equipment into an outlet on a circuit different from that to which the receiver is connected.

-- Consult the dealer or an experienced radio/TV technician for help.

Warning: changes or modifications not expressly approved by the party responsible for compliance could void the user's authority to operate the equipment

The devices has been evaluated to meet general RF exposure requirement， the device can be used in portable exposure condition without restriction

Household electric treadmill FCC ID:2BEPD-HET IC:31938-HET HVIN:CS-WP9

FCC STATEMENT

1. This device complies with Part 15 of the FCC Rules. Operation is subject to the following two conditions:

(1) This device may not cause harmful interference.

(2) This device must accept any interference received, including interference that may cause undesired operation.

2. Changes or modifications not expressly approved by the party responsible for compliance could void the user's authority to operate the equipment.

NOTE: This equipment has been tested and found to comply with the limits for a Class B digital device, pursuant to Part 15 of the FCC Rules. These limits are designed to provide reasonable protection against harmful interference in a residential installation.

This equipment generates uses and can radiate radio frequency energy and, if not installed and used in accordance with the instructions, may cause harmful interference to radio communications. However, there is no guarantee that interference will not occur in a particular installation. If this equipment does cause harmful interference to radio or television reception, which can be determined by turning the equipment off and on, the user is encouraged to try to correct the interference by one or more of the following measures:

Reorient or relocate the receiving antenna.

Increase the separation between the equipment and receiver.

Connect the equipment into an outlet on a circuit different from that to which the receiver is connected.

Consult the dealer or an experienced radio/TV technician for help.

FCC Radiation Exposure Statement

This equipment complies with FCC radiation exposure limits set forth for an uncontrolled environment. This equipment should be installed and operated with without restriction between the radiator & your body.

IC WARNING

This device contains licence-exempt transmitter(s)/receiver(s) that comply with Innovation, Science
and Economic Development Canada’s licence-exempt RSS(s). Operation is subject
to the following two conditions:

(1) This device may not cause interference.

(2) This device must accept any interference, including interference that may cause undesired operation of the device.

Le présent appareil est conforme aux CNR d’Industrie Canada applicables aux appareils radio exempts de licence.

Lexploitation est autorisée aux deux conditions suivantes:

(1) l’appareil ne diot pas produire de brouillage, et

(2) l’utilisateur de lappareil diot accepter tout bouillage radioélectrique subi, méme si le brouillage est susceptible d’en compromettre le fonctionnement.